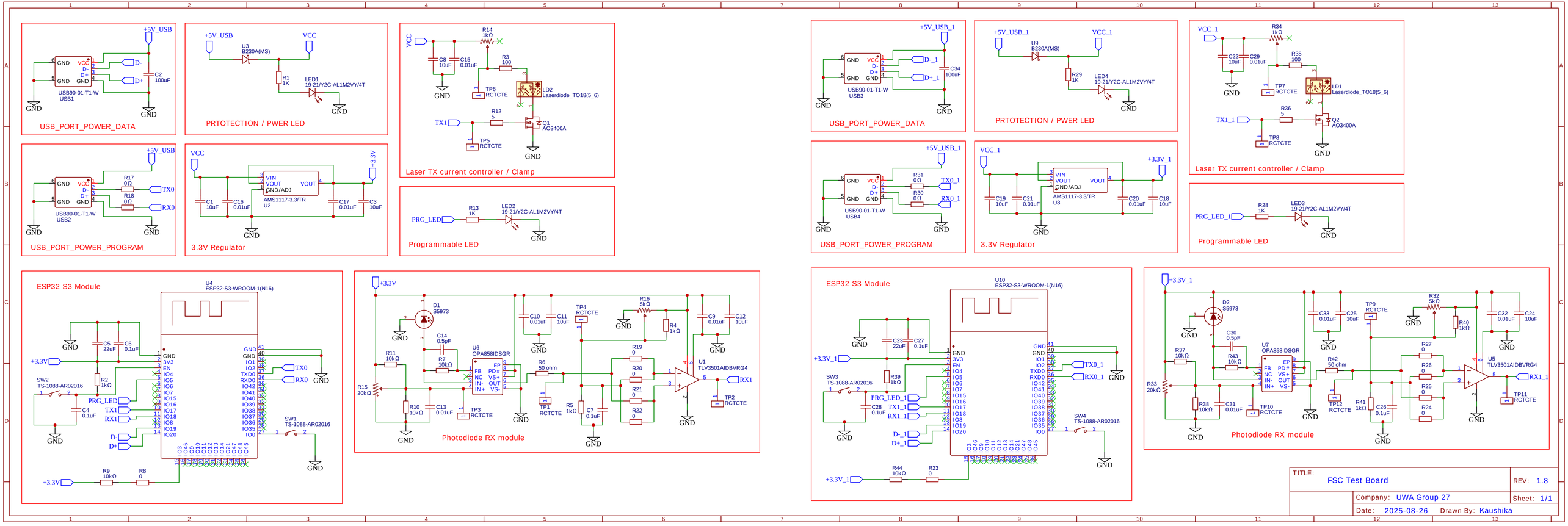
USB_PORT_POWER_DATA
+5V_USB
USB90-01-T1-W
USB1
C2
100uF
D-
D+
GND
PRTOTECTION / PWER LED
U3
B230A(MS)
VCC
R1
1K
LED1
19-21/Y2C-AL1M2VY/4T
Laser TX current controller / Clamp
R14
1kΩ
R3
100
C8
10uF
C15
0.01uF
TP6
RCTCTE
LD2
Laserdiode_TO18(5_6)
R12
5
Q1
AO3400A
TX1
TP5
RCTCTE
USB_PORT_POWER_PROGRAM
R17
0Ω
R18
0Ω
TX0
RX0
USB90-01-T1-W
USB2
3.3V Regulator
VIN
VOUT
GND/ADJ
AMS1117-3.3/TR
U2
C1
10uF
C16
0.01uF
C17
0.01uF
C3
10uF
+3.3V
Programmable LED
PRG_LED
R13
1K
LED2
19-21/Y2C-AL1M2VY/4T
ESP32 S3 Module
U4
ESP32-S3-WROOM-1(N16)
C5
22uF
C6
0.1uF
R2
1kΩ
C4
0.1uF
SW2
TS-1088-AR02016
PRG_LED
TX1
RX1
D-
D+
SW1
TS-1088-AR02016
R9
10kΩ
R8
0
Photodiode RX module
D1
S5973
C14
0.5pF
R11
10kΩ
R15
20kΩ
R10
10kΩ
R7
10kΩ
U6
OPA858IDSGR
C13
0.01uF
TP3
RCTCTE
C10
0.01uF
C11
10uF
R6
50 ohm
TP1
RCTCTE
TP4
RCTCTE
R16
5kΩ
R4
1kΩ
R19
0
R20
0
R21
0
R22
0
R5
1kΩ
C7
0.1uF
C9
0.01uF
C12
10uF
U1
TLV3501AIDBVRG4
TP2
RCTCTE
RX1
USB_PORT_POWER_DATA
+5V_USB_1
USB90-01-T1-W
USB3
D-_1
D+_1
C34
100uF
PRTOTECTION / PWER LED
U9
B230A(MS)
VCC_1
R29
1K
LED4
19-21/Y2C-AL1M2VY/4T
Laser TX current controller / Clamp
R34
1kΩ
R35
100
C22
10uF
C29
0.01uF
TP7
RCTCTE
LD1
Laserdiode_TO18(5_6)
R36
5
Q2
AO3400A
TX1_1
TP8
RCTCTE
USB_PORT_POWER_PROGRAM
R31
0Ω
R30
0Ω
TX0_1
RX0_1
USB90-01-T1-W
USB4
3.3V Regulator
AMS1117-3.3/TR
U8
C19
10uF
C21
0.01uF
C20
0.01uF
C18
10uF
+3.3V_1
Programmable LED
PRG_LED_1
R28
1K
LED3
19-21/Y2C-AL1M2VY/4T
ESP32 S3 Module
U10
ESP32-S3-WROOM-1(N16)
C23
22uF
C27
0.1uF
R39
1kΩ
C28
0.1uF
SW3
TS-1088-AR02016
PRG_LED_1
TX1_1
RX1_1
D-_1
D+_1
SW4
TS-1088-AR02016
R44
10kΩ
R23
0
Photodiode RX module
D2
S5973
C30
0.5pF
R37
10kΩ
R33
20kΩ
R38
10kΩ
C31
0.01uF
TP10
RCTCTE
U7
OPA858IDSGR
R43
10kΩ
C33
0.01uF
C25
10uF
TP9
RCTCTE
R42
50 ohm
TP12
RCTCTE
R41
1kΩ
C26
0.1uF
R32
5kΩ
R40
1kΩ
R27
0
R26
0
R25
0
R24
0
C32
0.01uF
C24
10uF
U5
TLV3501AIDBVRG4
TP11
RCTCTE
RX1_1
TITLE:
FSC Test Board
REV: 1.8
Company: UWA Group 27
Sheet: 1/1
Date: 2025-08-26
Drawn By: Kaushika