Project1 / PLC_1 [CPU 1214C AC/DC/Rly] / Program blocks

Main [OB1]

Main Properties							
General							
Name	Main	**Number**	1	**Type**	OB	**Language**	LAD
Numbering	Automatic						
Information							
Title	"Main Program Sweep (Cycle)"	**Author**		**Comment**		**Family**	
Version	0.1	**User-defined ID**					

Main			
Name	**Data type**	**Default value**	**Comment**
Input			
Initial_Call	Bool		Initial call of this OB
Remanence	Bool		=True, if remanent data are available
Temp			
Constant			

Network 1:

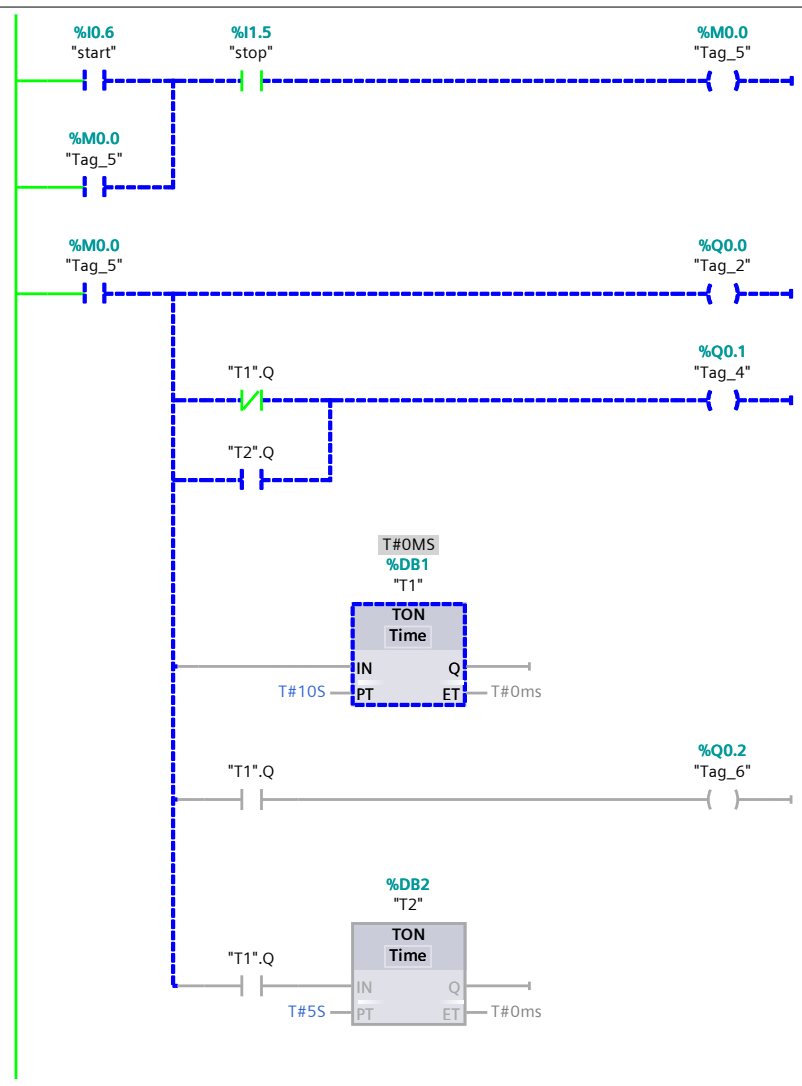

Network 2: