Random circuit block-encoded matrix and Quantum LINPACK Benchmark

Hongli Zhao

Fall 2020 BEBOP Seminar

November 8, 2020

Topics

1. Notations & Preliminaries
2. Hamiltonian Simulation
3. Quantum Linear System Problems
4. RACBEM
5. Proposal for Quantum LINPACK Benchmark
6. Summary & Work-in-Progress

Notations and Definitions

- Postulate: a quantum system can be associated with a complex Hilbert space.
  - Dirac notation $|\psi\rangle$ denotes a vector in the complex vector space. $\langle\psi|$ denotes the dual of $|\psi\rangle$, and the inner product can be identified as:

$$\langle\psi|\phi\rangle = f_\psi(|\phi\rangle)$$

  - Qubit: basis of computation, residing in a 2-dimensional complex vector space. Analogous to classical bits, the (pure) state of a qubit can be $|0\rangle, |1\rangle$.

$$|\psi\rangle = \alpha\,|0\rangle + \beta\,|1\rangle$$

    called a superposition, $\alpha, \beta \in \mathbb{C}, |\alpha|^2 + |\beta|^2 = 1$.
  - We are operating on a complex unit sphere $\rightarrow$ high capacity
    - (Bloch sphere) $\cos\left(\frac{\theta}{2}\right)|0\rangle + e^{i\phi}\sin\left(\frac{\theta}{2}\right)|1\rangle$.

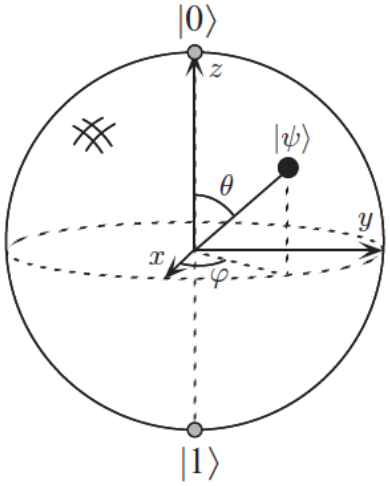

- (linear algebra notation) let $|0\rangle, |1\rangle$ be the computational basis, we can write a pure state as:

$$|\psi\rangle = \begin{bmatrix} \alpha \\ \beta \end{bmatrix} = \alpha \begin{bmatrix} 1 \\ 0 \end{bmatrix} + \beta \begin{bmatrix} 0 \\ 1 \end{bmatrix}$$

- (composite quantum systems) the state space of a composite system with components $|\psi_i\rangle, i \in \mathbb{N}$, is the tensor product: $|\psi_1\rangle \otimes \cdots \otimes |\psi_n\rangle$.
  - (multi-qubit system) for instance, a 2-qubit system has basis $\{|00\rangle, |01\rangle, |10\rangle, |11\rangle\}$
  - the dimension of the Hilbert space grows *exponentially*, for n qubits, the dimension is $N = 2^n$.

Basic gates / operators

- (Pauli matrices)

$$X = \begin{pmatrix} 0 & 1 \\ 1 & 0 \end{pmatrix}, Y = \begin{pmatrix} 0 & -i \\ i & 0 \end{pmatrix}, Z = \begin{pmatrix} 1 & 0 \\ 0 & -1 \end{pmatrix}$$

  note $\{I, X, Y, Z\}$ span $SU(2)$.

- (Hadamard operator and $CNOT$)

$$H = \frac{1}{\sqrt{2}} \begin{pmatrix} 1 & 1 \\ 1 & -1 \end{pmatrix}, CNOT = \begin{pmatrix} 1 & & & \\ & 1 & & \\ & & & 1 \\ & & 1 & \end{pmatrix}$$

  $X = HZH$.

- (Phase gate and $\pi/8$-gate)

$$S = \begin{pmatrix} 1 & 0 \\ 0 & i \end{pmatrix}, T = \begin{pmatrix} 1 & 0 \\ 0 & e^{i\pi/4} \end{pmatrix}$$

S is a $\pi/2$-rotation around the Z-axis, and $S = T^2$.

Basic circuits

- (measurement) we restrict ourselves to only consider projective measurement onto the computational basis, *e.g.*

$$p(m) = \langle \psi | M_m^\dagger M_m | \psi \rangle$$

for projective measurement, let $M_0 = |0\rangle\langle 0|$, $M_1 = |1\rangle\langle 1|$ e.g.

```
# get the frequencies
counts_profile = data.groupby(lambda x: data[x]).count()
cirq.plot_state_histogram(result)
SVGCircuit(circuit)
```

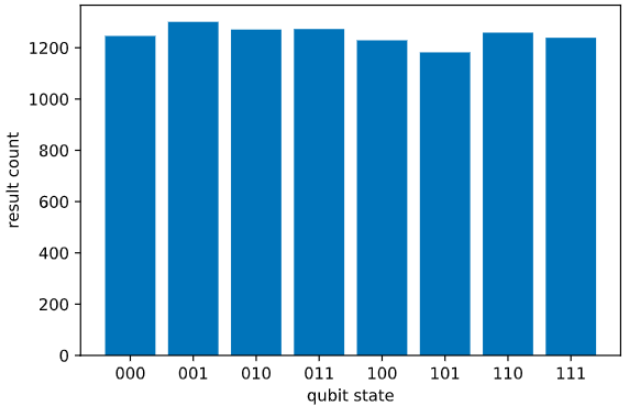

Out[43]:

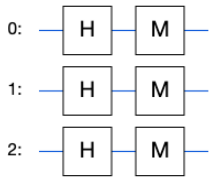

Figure: simulated state distribution of uniform superposition

Universal gate approximation

Universal gate set

A set of quantum gates $S = \{U_1, U_2, \cdots, U_k\}$ is *universal* if any unitary operator U can be decomposed into a sequence $U_L U_{L-1} \cdots U_1$ such that:

$$\|U - U_L U_{L-1} \cdots U_1\|_2 < \epsilon$$

- (Solovay-Kitaev Theorem) any unitary U can be approximated up to error ϵ given $O(\log^2 \frac{1}{\epsilon})$, or $poly(\log(\frac{1}{\epsilon}))$ gate applications from a universal set.
- $\{S, T, CNOT, H\}$ is a universal gate set.

Summary of Postulates

1. a quantum system is completely described by a state vector in a complex Hilbert space.
2. the evolution of the system over time is described by a **unitary** operation:
$$|\psi_t\rangle = U|\psi_s\rangle$$
3. the outcome of a quantum experiment is described by a measurement operator M_m.
   - only consider projective measurements, represented by projection onto the eigenspace of M:
   $$M = \sum_m m \cdot P_m$$
   where m is the eigenvalue (outcome), and P_m is the projector.
   - for state $|\psi\rangle = \alpha_{00}|00\rangle + \alpha_{01}|01\rangle + \alpha_{10}|10\rangle + \alpha_{11}|11\rangle$, we observe $|00\rangle$ with probability $|\alpha_{00}|^2$, $|1\cdot\rangle$ with probability $|\alpha_{10}|^2 + |\alpha_{11}|^2$.

QLSP

Linear System Problem

Let $A \in \mathbb{C}^{n \times n}$, $b \in \mathbb{C}^n$, output a vector $x \in \mathbb{C}^n$ such that:

$$Ax = b$$

- current best classical method is *conjugate gradient*, with runtime complexity $O(N\sqrt{\kappa}\log(1/\epsilon))$ steepest descent $O(N\kappa\log(1/\epsilon))$.

Quantum Linear System Problem

Let $A \in \mathbb{C}^{n \times n}$ be Hermitian, and $\det(A) = 1 \neq 0$. Let $b, x \in \mathbb{C}^n$ such that $x = A^{-1}b$. Let the quantum states $|b\rangle, |x\rangle$ be on $\lceil \log N \rceil$ quantum registers, output a state $|\tilde{x}\rangle$ such that $\| |\tilde{x}\rangle - |x\rangle \|_2 < \epsilon$ with success probability $> 1/2$.
Namely (suppose A can be queried via an oracle),

$$A|\tilde{x}\rangle \sim |b\rangle$$

with high probability.

- (Harrow, Hassidim, Lloyd 2009) first proposed an algorithm that runs in $O(\log(N)\kappa^2/\epsilon)$; predicted the optimal dependence on κ is $O(\kappa)$, exponential speed-up in N, but super-linearly slower in κ, exponentially worse in ϵ.
- (Childs, Kothari, Somma 2017) proposed an exponential speed-up in dependence on ϵ, which runs $O(\kappa^2 polylog(\kappa/\epsilon))$.
- (An, Lin 2019) removed super-linear dependence on κ, at most $O(\kappa poly(\log(\kappa/\epsilon)))$, near-optimal.
- the key to solving QLSP is representing A^{-1} using some linear combination of unitaries, and apply the circuit on $|b\rangle$.
- But how do we prepare $|b\rangle$ and access to A?
- (read-in problem) quantum recommendation system was widely accepted to have an exponential speed-up over classical algorithms. [Kerenidis, Prakash 2016], [Dervovic et al. 2018].
  - (Tang, 2019) depends on quantum data structure, may only be polynomial speed-up. Dequantization

Implementing matrix computations on a quantum computer

- Idea: represent arbitrary matrices as upper-left block of a unitary
  - $$U = \begin{pmatrix} A/\alpha & \cdot \\ \cdot & \cdot \end{pmatrix}$$

Block-Encoding

Let A be a n-qubit operator, $\alpha, \epsilon > 0$, $m \in \mathbb{N}$. Then we call an $(n+m)$-qubit unitary U as an (α, m, ϵ)-block-encoding of A if:

$$\left\| A - \alpha(\langle 0|^{\otimes m} \otimes I) U (|0\rangle^{\otimes m} \otimes I) \right\| < \epsilon$$

- take s-qubit state $|\psi\rangle$, can verify:

$$\alpha(\langle 0|^{\otimes m} \otimes I) U (|0\rangle^{\otimes m} \otimes I) |\psi\rangle = A |\psi\rangle$$

- any $\|A\| > 1$ cannot be encoded. Pad 0's if necessary for A a general matrix.

block-encoding, continued

- (Ex.) A is a (1,0,0)- block-encoding of itself.
- Low, Chuang 2016 a $(1, m, \epsilon)$-encoding of A is trivial.
  - In particular, we can do a $(1, 1, 0)$-encoding by doing the SVD of $A = W\Sigma V^\dagger$, and:

$$U = \begin{pmatrix} W & 0 \\ 0 & I \end{pmatrix} \cdot \begin{pmatrix} \Sigma & -\sqrt{I - \Sigma^2} \\ \sqrt{I - \Sigma^2} & \Sigma \end{pmatrix} \cdot \begin{pmatrix} V^\dagger & 0 \\ 0 & I \end{pmatrix}$$

    is an encoding using 1 ancilla.
- (GSLW 2018) can do linear combinations and multiplications of block-encodings $\rightarrow$ allows us to perform matrix arithmetics

- can implement block-encoding of matrix polynomials $P(A) = \sum_{i=1}^{n} \alpha_i A^n$
- or general matrix linear combinations so long as we find appropriate encodings:

$$A = \sum_{i=1}^{n} \alpha_i A_i$$

- wait ... what is $U_A + U_B$ on quantum circuit? (Childs, Kothari, Somma 2017) probabilistic approach that underlies many other algorithms.
  1. block encode A_i as unitary U_{A_i}.
  2. use LCU algorithm to obtain $\sum_{i=1}^{n} \alpha_i A_i$.
  3. obtain U_A to solve our problem.
- Example: (CKS 2017) solving $Ax = b$ approximately
  - (Fourier approach) $A^{-1} \approx \sum_{i=0}^{n} \alpha_i e^{-iAt_i}$
  - (Chebyshev approach) $A^{-1} \approx \sum_{i=0}^{n} \alpha_j T_{2j+1}(A)$

Quantum Singular Value Transformation

- Suppose A is Hermitian, if not, consider: $\begin{pmatrix} 0 & A^\dagger \\ A & 0 \end{pmatrix}$
- $A = V \Lambda V^\dagger$ is the SVD. V is an orthogonal matrix, and $V^\dagger V = I$.

Definition: QSVT

Let $f : \mathbb{R} \to \mathbb{C}$ with even / odd parity. Let $rank(V) = d$. Then write:

$$A = \sum_{j=1}^{d} \lambda_j \left|\psi_j\right\rangle \left\langle\psi_j\right|$$

Then we call:

$$f(A) = \sum_{j=1}^{d} f(\lambda_j) \left|\psi_j\right\rangle \left\langle\psi_j\right|$$

the singular value transformation.

QSVT through Qubitization

- Goal: implement $U_{f(A)}$ given U_A.
- Recall the previous $(1,1,0)$-encoding:

$$U_A = \begin{pmatrix} V & \\ & I \end{pmatrix} \cdot \begin{pmatrix} \Lambda & -\sqrt{I-\Lambda^2} \\ \sqrt{I-\Lambda^2} & \Lambda \end{pmatrix} \cdot \begin{pmatrix} V^\dagger & \\ & I \end{pmatrix}$$

denote $\tilde{V} = diag(V, I)$, we have:

$$\tilde{V}^\dagger U_A V = \begin{pmatrix} \Lambda & -\sqrt{I-\Lambda^2} \\ \sqrt{I-\Lambda^2} & \Lambda \end{pmatrix} \sim \bigoplus_{j=1}^{d} \begin{pmatrix} \lambda_j & -\sqrt{1-\lambda_j^2} \\ \sqrt{1-\lambda_j^2} & \lambda_j \end{pmatrix}$$

$$= \bigoplus_{j=1}^{d} e^{i\frac{\pi}{4}Z} W(\lambda_j) e^{-i\frac{\pi}{4}Z}$$

where $W(x) = e^{i\arccos(x)X}$.

- now we just need to consider the implementation of each $SU(2)$ matrices.

Quantum Signal Processing

- (Low, Yoder Chuang) consider the sequence of unitary gates:

$$e^{i\phi_0\sigma_z}e^{i\theta\sigma_x}e^{i\phi_1\sigma_z}e^{i\theta\sigma_x}\cdots e^{i\theta\sigma_x}e^{i\phi_k\sigma_z}$$

  where θ is unknown, but one has control over *phase factors* $(\phi_0, \phi_1, \cdots, \phi_k) \in \mathbb{R}^k$.
- What unitary operators can we implement using rotations and phase shifts?

(GSLW) Theorem: existence of phase factors

There exists $\Phi = \{\phi_0, \phi_1, \cdots, \phi_k\}$ such that for all $x \in [-1, 1]$:

$$U_\Phi = e^{i\phi_0\sigma_z}\prod_{j=1}^{k}(W(x)\cdot e^{i\phi_j\sigma_z}) = \begin{pmatrix} P(x) & iQ(x)\sqrt{1-x^2} \\ iQ^*(x)\sqrt{1-x^2} & P^*(x) \end{pmatrix}$$

if and only if $P, Q \in \mathbb{C}[x]$ and:

1. $deg(P) \leq k, deg(Q) \leq k-1$.
2. P has parity $k \mod 2$, Q has parity $(k-1) \mod 2$.
3. For all $x \in [-1, 1]$, $|P(x)|^2 + (1-x^2)|Q(x)|^2 = 1$.

QSVT by Alternating Phase Modulation

- Recall $\tilde{V} = diag(V, I) = |0\rangle\langle 0| \otimes V + |1\rangle\langle 1| \otimes I_n$.
- (Simultaneous rotation) Let $\Pi = (2|0\rangle\langle 0| - I) \otimes I_n$, then:

$$\tilde{V}^\dagger \Pi \tilde{V} = \bigoplus_{j=1}^{d} \begin{pmatrix} 1 & 0 \\ 0 & -1 \end{pmatrix} = \bigoplus_{j=1}^{d} Z$$

applied on each $SU(2)$ subspace induced by λ_j, hence simultaneous.

Alternating Phase Modulation Sequence (APMS)

For $\Phi = \{\phi_0, \phi_1, \cdots, \phi_d\}$:

$$U_\Phi = e^{i\phi_0 \Pi} \prod_{j=1}^{d} U_A e^{i\phi_j \Pi}$$

is called an APMS.

QSVT by complex polynomials using APMS

Recall $P(x) \in \mathbb{C}[x]$ was the upper-left block of U_ϕ. The SVT by P is given by:

$$P(A) = P(V\Lambda V^\dagger) = VU_\Phi V^\dagger$$

- $U_{-\Phi}$ gives rise to P^*.
- For a real polynomial, observe that:

$$P_{\mathrm{Re}}(A) = \frac{P(A) + P^*(A)}{2}$$

here assuming A is Hermitian.

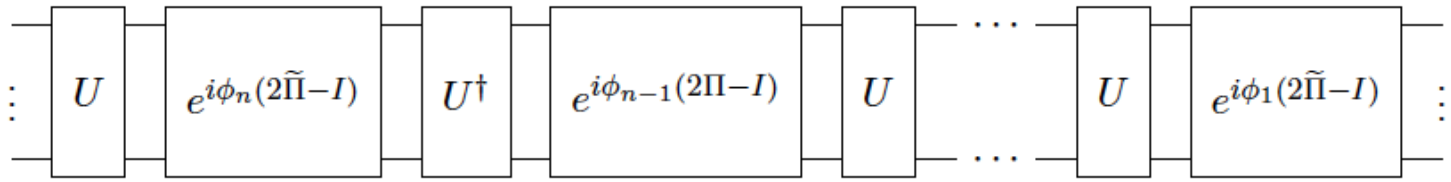

Figure: (GSLW 2018) efficient implementation of U_Φ with $\Phi \in \mathbb{R}^{d+1}$

- To find phase factors, used *QSPPACK* based on an optimization algorithm proposed in (DMWL 2020)

Another perspective

- To solve QLSP, enough to find a polynomial approximation $f(x) \sim \frac{1}{x}$ on $[\frac{1}{\kappa(A)}, 1]$ to capture all eigenvalues of A.
- practical implementation to solve QLSP on a quantum architecture is limited due to hypersensitivity to error $\rightarrow$ not suitable for near-term applications.
- reformulate the approach:
  1. generate U_A using easily implementable circuit.
  2. obtain block-encoded matrix A through measurement.
  3. see what A can do (and how much control we have on A) $\rightarrow$ control comes from QSVT.

RAndom Circuit Block-Encoded Matrix

- *LINPACK*: assess performance and select Top500 supercomputers via solving dense, random matrices
- on quantum:
  1. generate circuit U_A using random circuit $\rightarrow$ random, large matrix almost drawn from a Haar measure
  2. assemble larger circuit according to APMS to obtain $U_{f(A)}$.

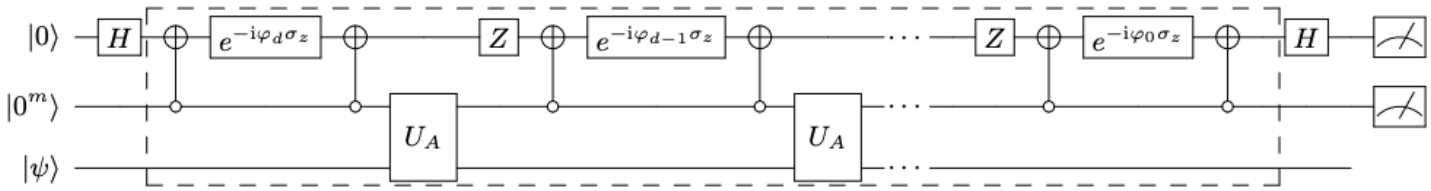

Figure: (GSLW 2018) efficient implementation of U_Φ with $\Phi \in \mathbb{R}^{d+1}$, for Hermitian A

"Hermitianized" RACBEM

- If A is not Hermitian:
  - (DL 2020) $U_{A^\dagger}$ implementable from U_A through conjugating each gate and reversing the APMS sequence.

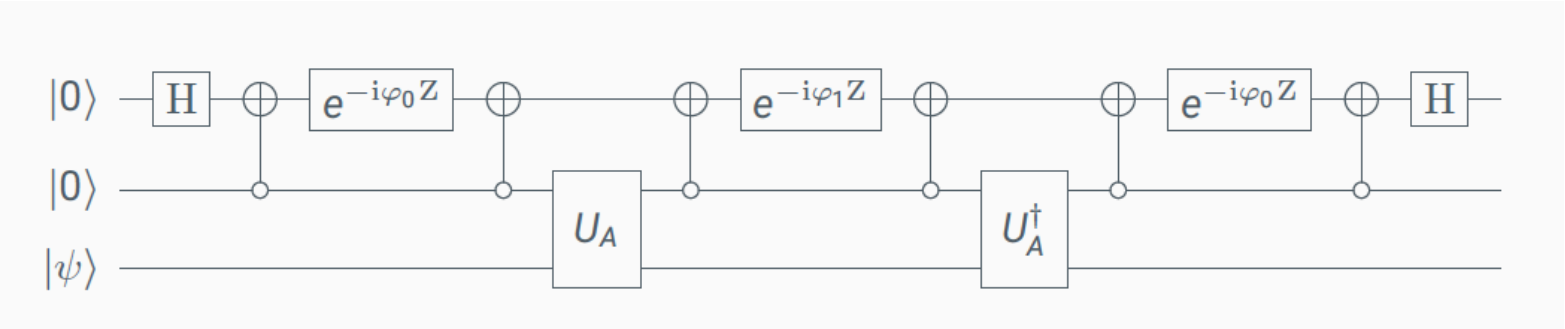

  - implements a quadratic polynomial transformation:

$$p(x) = (-2\sin(2\phi_0)\sin(\phi_1))x^2 + \cos(2\phi_0 - \phi_1)$$

- (canonical H-RACBEM) can make $A^\dagger A$ by setting:

$$\begin{cases} -2\sin(2\phi_0)\sin(\phi_1) = 1 \\ \cos(2\phi_0 - \phi_1) = 0 \end{cases}$$

letting $\phi_i \in [-\pi, \pi)$.

Testing

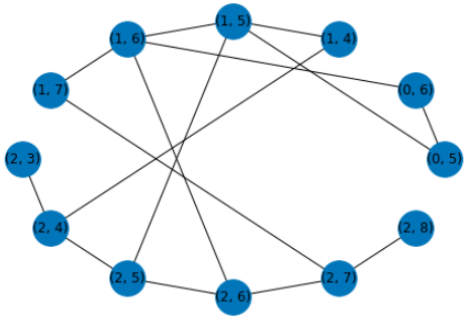

(a) Google Bristlecone qubit coupling map

```
singular values of Block-Encoded matrix using 3 system qubits and 2 block-encoding qubits.
 [0.34086671 0.29394881 0.26735177 0.2220437  0.21432785 0.19346282
 0.03497547 0.0180379 ]
  -0.0384237-0.022147j  -0.0835683-0.0433543j   0.0243967+0.0769293j   0.0285587+0.0591709j  0.0935282+0.0107572j  -
0.0280196-0.0343768j  -0.0477557-0.0451241j  -0.00459402+0.0805743j
-0.00256137-0.0891799j  -0.0447089+0.029903j3j  -0.0403505+0.0422492j  0.0861772-0.00360989j  0.0311312-0.0438628j
0.0293603-0.0842471j    -0.079244+0.034058j   -0.0527494+0.0251129j
   0.049433-0.0311374j  -0.0844572-0.0175083j   0.0192571-0.0871136j  -0.0506501+0.0181014j   0.085156-0.0137114j
0.0572801-0.0114954j   0.0408853-0.0349498j    0.0490131-0.0745475j
 -0.0424153-0.0686605j  -0.0421223-0.0504232j  -0.0426636-0.0121115j   -0.0916162-0.021673j  0.0573156+0.0321203j  -
0.0151879-0.0792632j   0.0933288-0.0123687j    -0.035555-0.0265087j
  0.0535871+0.0147083j    0.103916+0.0283117j   0.0488105+0.0788603j    0.0457295+0.063209j   0.107186-0.0105445j  -
0.044838-0.0328248j   0.0652389+0.0427837j   -0.0175321-0.0910716j
  -0.0225354+0.100826j   0.0570545-0.02713543j  -0.0608413+0.0381925j    0.0962176+0.015723j  0.0436533-0.0456721j
0.0569592-0.0861944j     0.09551-0.0195672j     0.0704529-0.014026j
 -0.0496946+0.0518727j  0.0971476-0.00820837j  -0.00272511-0.103278j  -0.0487177+0.0402261j   0.087858-0.0422612j
0.0649078-0.0307786j  -0.0312017+0.0549364j   -0.0342272+0.0974799j
  0.0281123+0.0883804j     0.02894+0.0724503j  -0.0483845-0.0273286j  -0.0938783-0.0527912j  0.0528403+0.0573975j  0.
00519926-0.0925979j   -0.106523-0.0159046j    0.0354827+0.0427655j
```

(b) 8×8 Block-encoded matrix

Figure: QSVT circuit generated for RACBEM

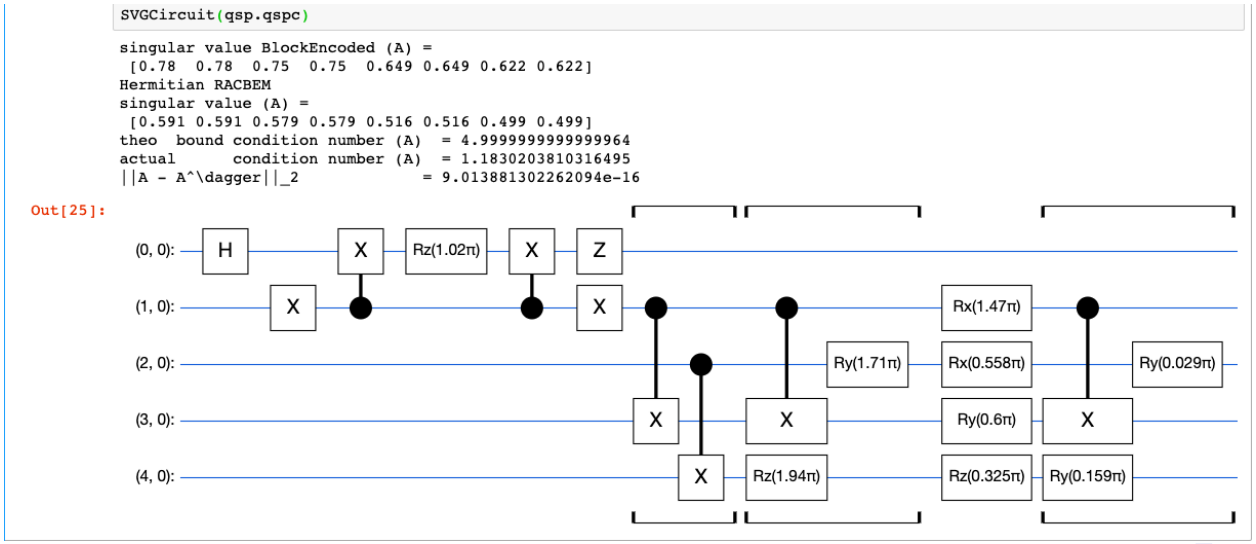

Conclusion and work-in-progress

- the RACBEM implementation is not limited by quantum device architecture
- universal gate set easily accessible
- Previous implementation with IBM-Q cloud architecture, need to get Google device calibration data
- (Quantum Supremacy) proof for hardness of sampling → cross-entropy difference test

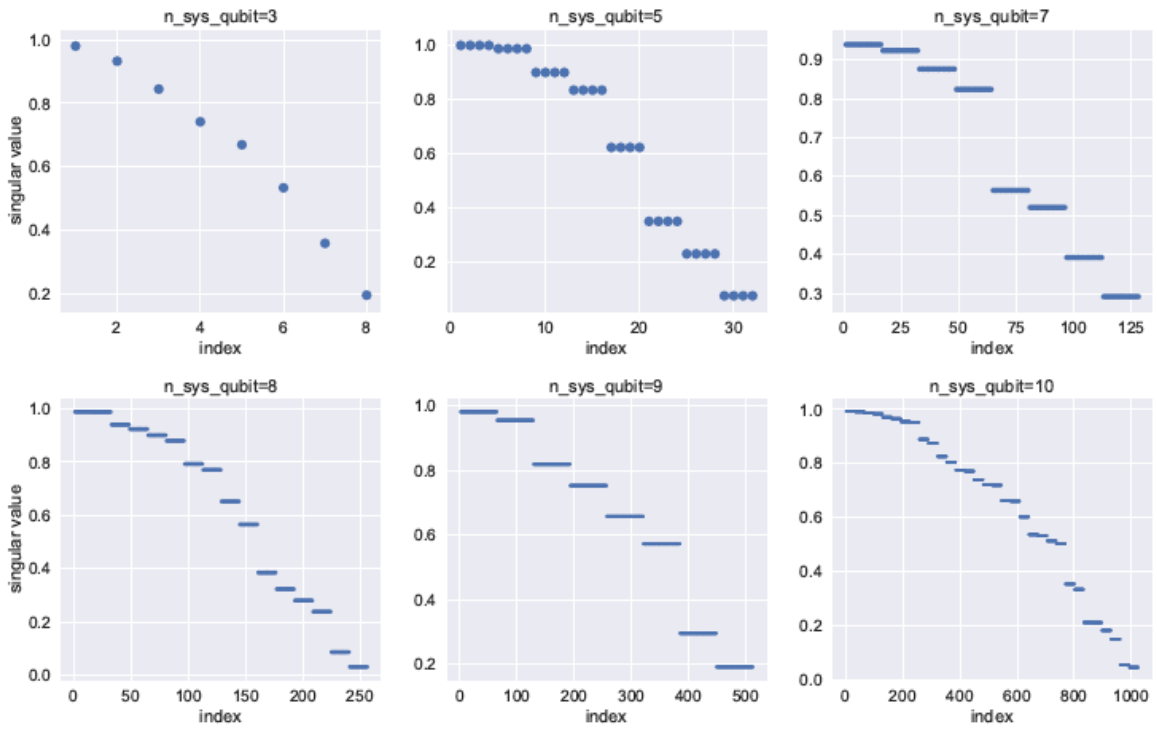

References

- Dong An and Lin Lin. Quantum linear system solver based on time-optimal adiabatic quantum computing and quantum approximate optimization algorithm. arXiv preprint arXiv:1909.05500, 2019.
- Aram W Harrow, Avinatan Hassidim, and Seth Lloyd. Quantum algorithm for linear systems of equations. Physical review letters, 103(15):150502, 2009.
- András Gilyén, Yuan Su, Guang Hao Low, and Nathan Wiebe. Quantum singular value transformation and beyond: exponential improvements for quantum matrix arithmetics. arXiv preprint arXiv:1806.01838, 2018.

- Aram W Harrow and Richard A Low. Random quantum circuits are approximate 2-designs. Communications in Mathematical Physics, 291(1):257–302, 2009.
- Lin Lin and Yu Tong. Optimal quantum eigenstate filtering with application to solving quantum linear systems. arXiv, pages arXiv–1910, 2019.
- Yulong Dong and Lin Lin. Random circuit block-encoded matrix and a proposal of quantum LINPACK benchmark. arXiv:2006.04010