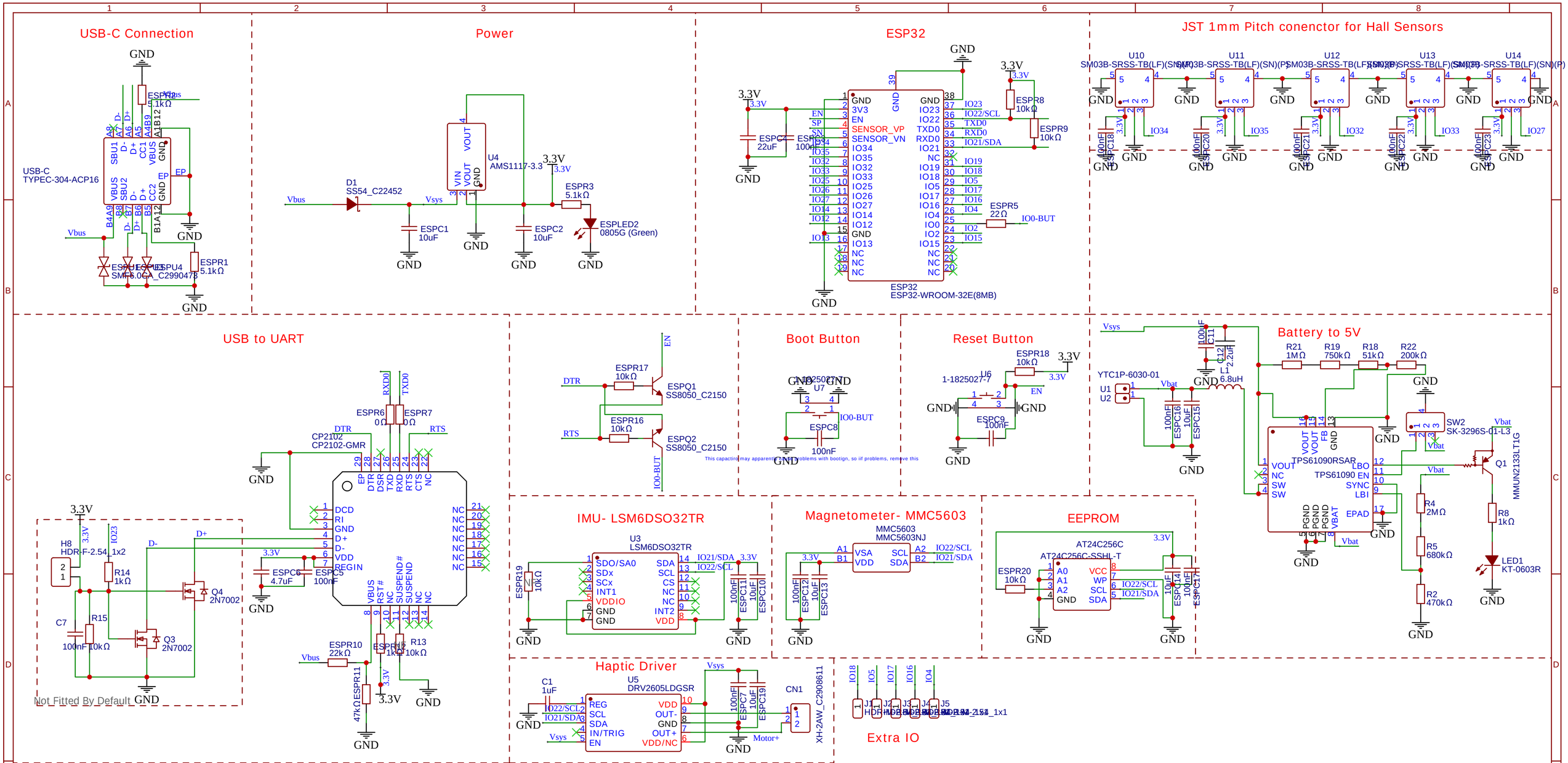

TITLE: Sheet_1	REV: 1.0
EasyEDA — Company: Your Company	Sheet: 1/1
Date: 2023-08-29	Drawn By: rutrle.jan