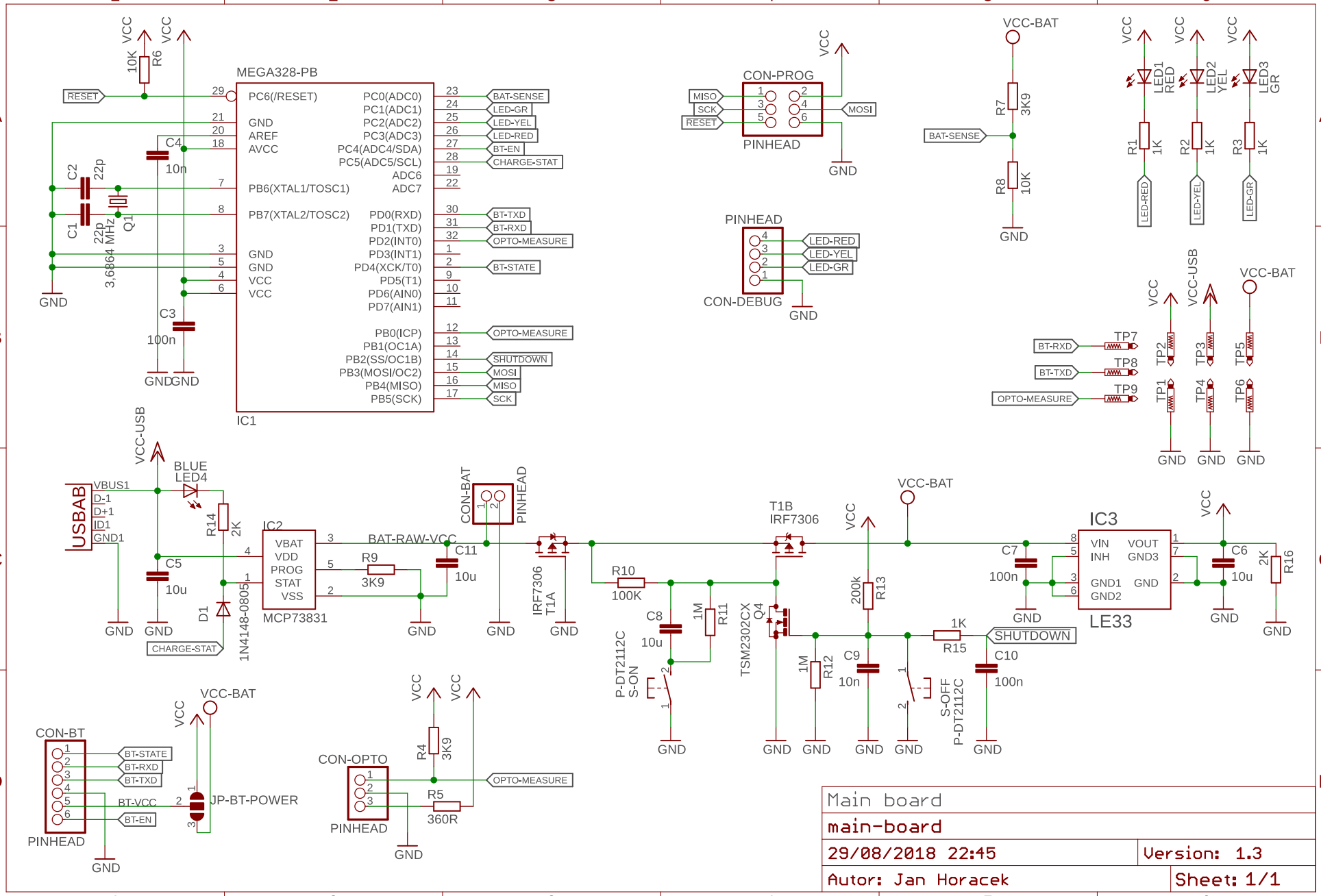
MEGA328-PB
IC1
PC6(/RESET)
GND
AREF
AVCC
PB6(XTAL1/TOSC1)
PB7(XTAL2/TOSC2)
GND
GND
VCC
VCC
PC0(ADC0)
PC1(ADC1)
PC2(ADC2)
PC3(ADC3)
PC4(ADC4/SDA)
PC5(ADC5/SCL)
ADC6
ADC7
PD0(RXD)
PD1(TXD)
PD2(INT0)
PD3(INT1)
PD4(XCK/T0)
PD5(T1)
PD6(AIN0)
PD7(AIN1)
PB0(ICP)
PB1(OC1A)
PB2(SS/OC1B)
PB3(MOSI/OC2)
PB4(MISO)
PB5(SCK)
RESET
BAT-SENSE
LED-GR
LED-YEL
LED-RED
BT-EN
CHARGE-STAT
BT-TXD
BT-RXD
OPTO-MEASURE
BT-STATE
OPTO-MEASURE
SHUTDOWN
MOSI
MISO
SCK
R6 10K
C4 10n
C2 22p
C1 22p
Q1 3,6864 MHz
C3 100n
CON-PROG
PINHEAD
MISO
SCK
RESET
MOSI
CON-DEBUG
LED-RED
LED-YEL
LED-GR
R7 3K9
R8 10K
VCC-BAT
R1 1K
R2 1K
R3 1K
LED1 RED
LED2 YEL
LED3 GR
TP7
TP8
TP9
TP1
TP2
TP3
TP4
TP5
TP6
VCC-USB
USBAB
VBUS1
D-1
D+1
ID1
GND1
BLUE LED4
R14 2K
C5 10u
D1 1N4148-0805
IC2
MCP73831
VBAT
VDD
PROG
STAT
VSS
BAT-RAW-VCC
R9 3K9
C11 10u
CON-BAT
IRF7306 T1A
R10 100K
C8 10u
R11 1M
P-DT2112C S-ON
T1B IRF7306
TSM2302CX Q4
R12 1M
R13 200k
C9 10n
S-OFF P-DT2112C
R15 1K
C10 100n
C7 100n
IC3
LE33
VIN
INH
GND1
GND2
VOUT
GND3
GND
C6 10u
R16 2K
CON-BT
BT-STATE
BT-RXD
BT-TXD
BT-VCC
BT-EN
JP-BT-POWER
CON-OPTO
R4 3K9
R5 360R
Main board
main-board
29/08/2018 22:45
Version: 1.3
Autor: Jan Horacek
Sheet: 1/1