THIS DOCUMENT AND THE DATA DISCLOSED HEREIN OR HEREWITH IS THE PROPERTY OF ALTIUM LIMITED AND MAY BE FREELY DISTRIBUTED IN WHOLE. NO RIGHTS ARE RESERVED OR EXPRESS OR IMPLIED WARANTEE GIVEN.

DWG. NO.	REV	SHT
		*

REVISION	DESCRIPTION	DATE	APPROVED

200mV v1.1

"SPI0/1: GPIO26 GPIO32 are usually used for SPI flash and PSRAM and not recommended for other uses. When using Octal flash or Octal PSRAM or both, GPIO33 GPIO37 are connected to SPIIO4 SPIIO7 and SPIDQS. Therefore, on boards embedded with ESP32-S3R8 / ESP32-S3R8V chip, GPIO33 GPIO37 are also not recommended for other uses."

The MINI-1-N4R2 module doesn't use Octal but leaving these pins NC for compatibility with Octal

LD2410B requires 200mA

ESP32-S3

ESP32-S3-MINI-1-N4R2

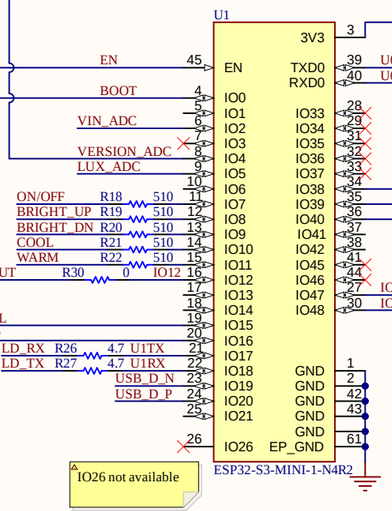

ESP32-MINI-1
Touch: IO1-IO14
ADC: IO1-IO20
USB: D- IO19, D+ IO20
EN: EN
UART: TXD0, RXD0

STRAPPING
BOOT: IO0
VDD_SPI: IO45
ROM: IO46
JTAG: IO3

optional I2C breakout

IO26 not available

CAPACITIVE TOUCH PADS

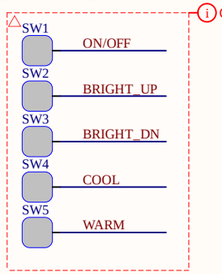

POWER INPUT (8V-54V)

VOLTAGE CONVERSION (5V@0.6A 3W)

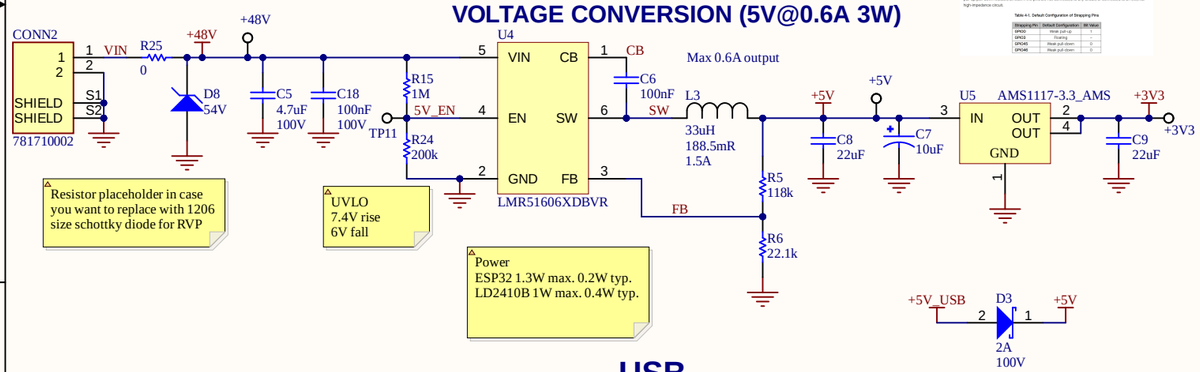

USB

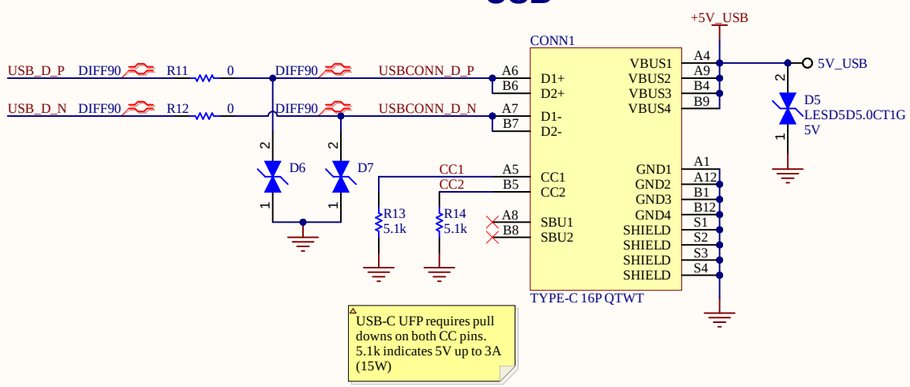

LED INDICATOR

- side mount LEDs
SK6805SIDE-G-003 (3.5x1.25x1.55)
SK6805SIDE-FRGBW-BW-P6 (4.8x1.8x.1.6)

SK6808SIDE-A (4x2x1.6)
SK6812SIDE-A (4x2x1.6)
SK6812SIDE-A-S (4x2x1.6)
SK6812SIDE-A-RVS (4x2x1.6)
WS2812B-4020-G1 (4x2x1.7)
WS2812C-4020 (4x2x1.7)
WS2812C-4020-H2 (4x2x1.7)
WS2812E-4020 (4x2x1.7)
XL-4020RGBC-WS2812B (4x2x1.7)

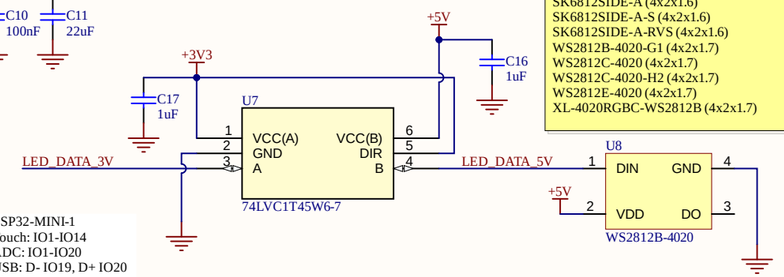

LD2410B mmWAVE

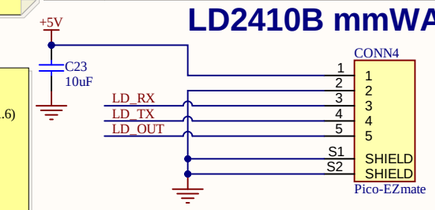

LIGHT SENSOR

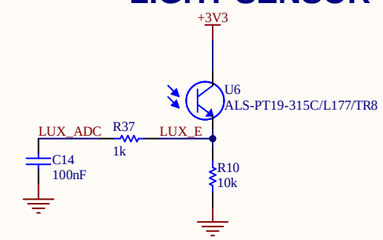

LED DRIVERS

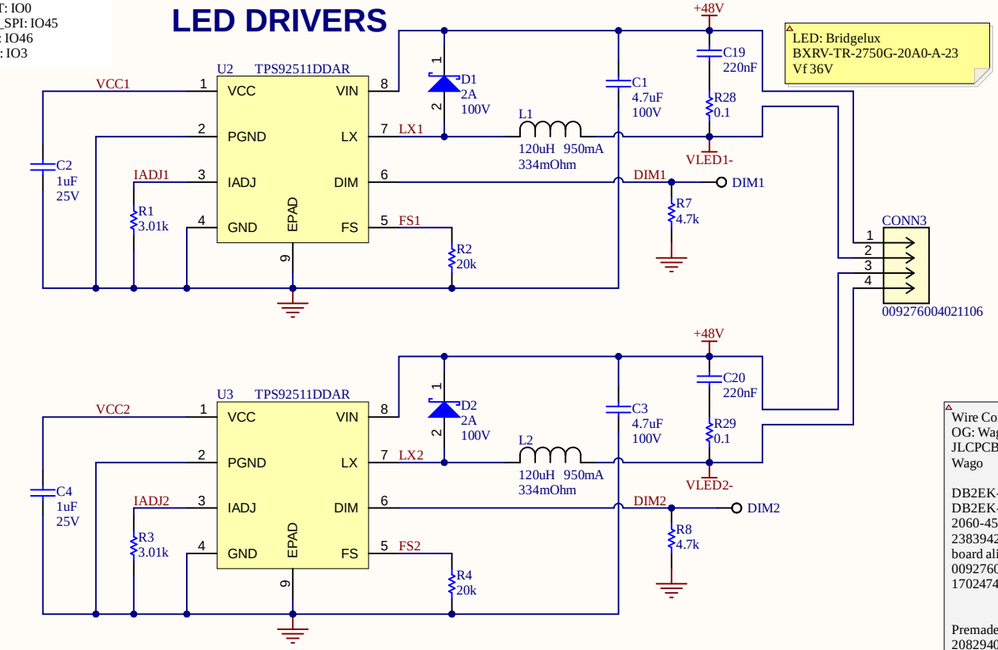

LED: Bridgelux
BXRV-TR-2750G-20A0-A-23
Vf 36V

TEMP SENSE

NXFT15XV103FEAB040

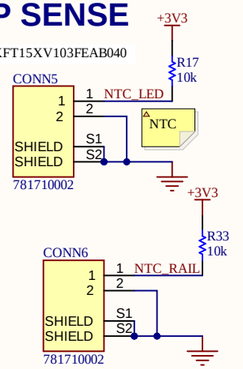

Wire Connector
OG: Wago 2059-322/998-403. 1750 in stock with JLCPCB but not LCSC. LCSC no longer carries Wago

DB2EK-2.54-2P-GN-S. too big
DB2EK-2.54-4P-GN-S. too big
2060-452/998-404. too big?
2383942-2. I dont think this can work because it has board align pins which interfere with capacitive pad
009276004021106. 20 in stock JLCPCB
1702474

Premade connectors?
2082940040

$$I_{LED} = \frac{1500}{R_{IADJ}} A$$

498mA max

Table 1. Commonly Used f_{SW} And R_{FS}

f_{SW} (kHz)	R_{FS} (kΩ)
50	200
100	100
300	33.2
500	20

ESP32-C3-MINI-1-H4

APPROVALS	DATE
ENG: Josh Horne	
DSN: *	
CHK: *	
REFERENCE DOCUMENTS	
BOM:	
ASSY DWG:	
FAB DWG:	
PCB DWG:	

PROJECT: Altium

PROJECT REVISION: Not in version control
DOCUMENT REVISION: Not in version control
DESIGN ITEM: Not in version control

TITLE: OTL2_LED-Driver.SchDoc

SIZE: B
CAGE CODE
DWG NO.
REV

SCALE:
FILE NAME: OTL2_LED-Driver.SchDoc
SHEET * OF *