REV.NO.	DATE	ZONE	REVISION	BY.	APPVD.

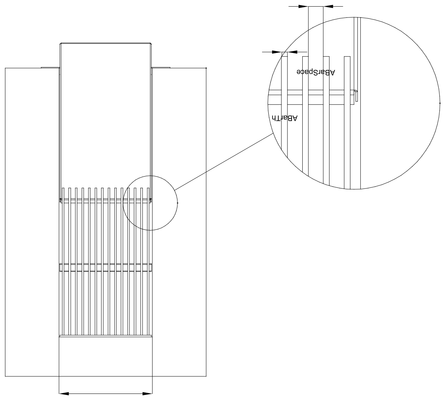

ELEVATION

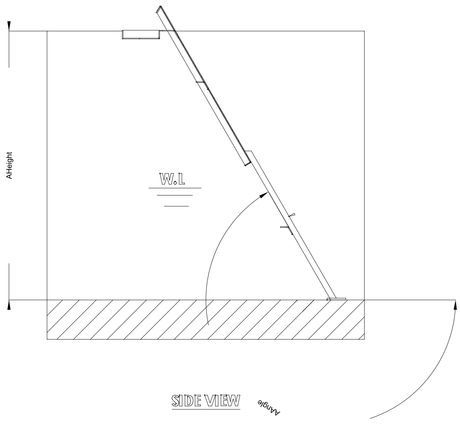

SIDE VIEW

General Description

Service	: Inlet Area
Type	: Bar Coarse Screen
Channel Depth	: 1500
Channel Width	: 600
Water Depth	: 500
Bar Section	: 12 x 50
Bar Spacing	: 25
Inclination Angle	: 60°
Material	: St.St. 304
Qty	: 1
Dimensions	: All Dimensions in mm

General Tolerance According to DIN 7168-M

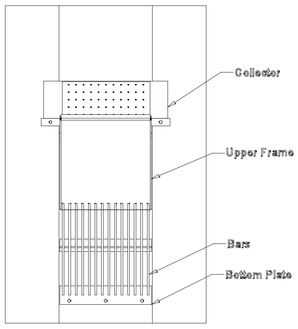

PLAN

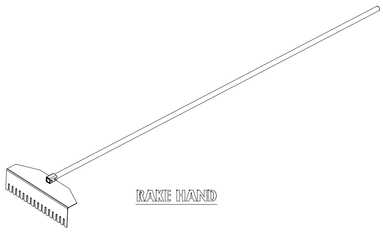

RAKE HAND

APPVD.	W.A	
CHKD.	W.F	
DRAWN	P.M	17/04/2024
OWNER:	National Organization For Potable Water and Sanitary Drainage "NOPWASD"	
CONSULTANT:		
MAIN CONTRACTOR:		
Client	VA TECH WABAG	
CIVIL CONTRACTOR:		
MANUFACTURER:	The Integrated Environmental Technologies and Oilfield Inter Co. S.A.E. Al-Khalifa Ahmed Bin Ziad St. NW Al-Khalifa Ahmed Bin Ziad St. NW Maadi, Cairo, Egypt Maadi, Cairo, Egypt Tel. (+20 02) 25200400 - (+20 02) 25200500 Fax (+20 02) 25200400 Email : info@ieco.com.eg	
PROJECT:	Delga WWTP – Capacity 15000 m3/day El Fashn Center – Beni Suif Governorate	
TITLE:	Inlet Screen (General Assembly)	
DWG NO.		SIZE A3
SCALE	1:10	SHEET 1 OF 1
WELD:		

THIS DRAWING IS FOR OFFER PURPOSE ONLY AND MAY BE CHANGED DURING FABRICATION .