REV.NO.	DATE	ZONE	REVISION	BY.	APPVD.

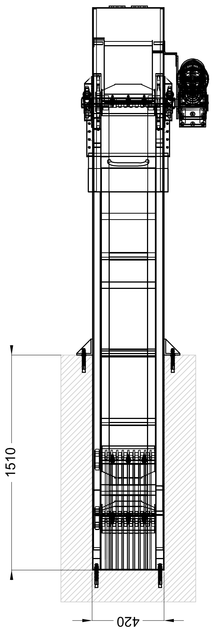

ELEVAION

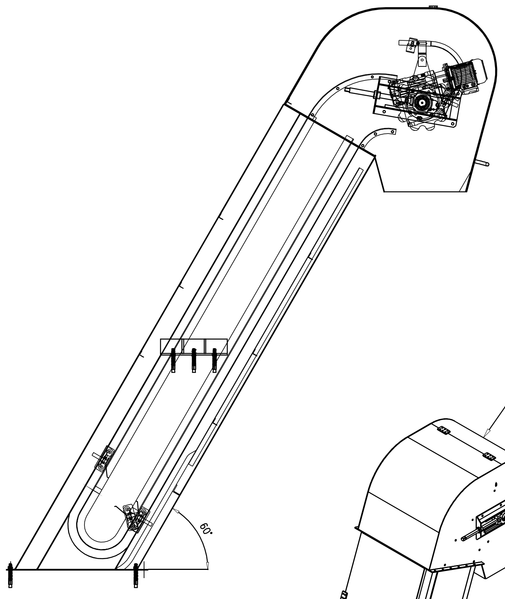

SIDE VIEW

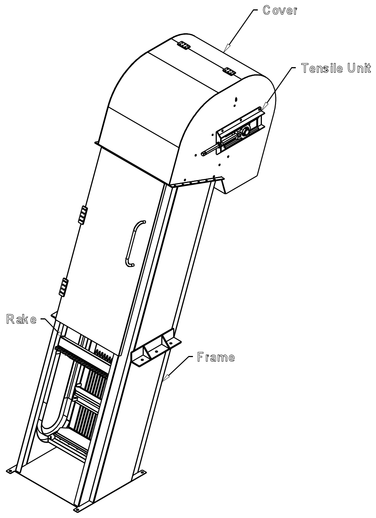

ISOMETRIC

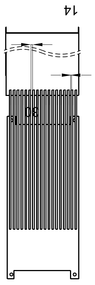

BARS

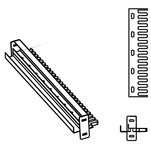

Vertical & Horizontal Adjustable Rake

General Description

Service	: Inlet Area
Type	:Mechanical Coarse Screen Multi rake
Channel Depth	: 1500
Channel Width	: 600
Water Depth	: 500
Bar Section	: 12 x 50
Bar Spacing	: 15
Inclination Angle	: 60°
Material	: St.St. 304
Qty	: 3
Dimensions	: All Dimensions in mm

General Tolerance According to DIN 7168-M

APPVD:	W.A	
CHKD:	W.F	
DRAWN	D.M	01/09/2024
OWNER:	National Organization For Potable Water and Sanitary Drainage "NOPWASD"	
CONSULTANT:		
MAIN CONTRACTOR:		
Client	VA TECH WABAG	
CIVIL CONTRACTOR:		
MANUFACTURER:	The Integrated Environmental Technologies and Oil Services Co. S.A.E. El-Ashrafy Housing Bldg Block No. 1008 Sixth District Nasr City Cairo, Egypt P.O.Box: 1073 Nasr City Tel: (+2) 0224044 , (+2) 0224045 Fax: (+2) 0224046 E-mail: info@iteos.com	
PROJECT:	Delga WWTP – Capacity 15000 m3/day El Fashn Center – Beni Suif Governorate	
TITLE:	Mechanical Screen (General Assembly)	
DWG NO.		SIZE: A3
SCALE:	1:10	SHEET: 1 OF 1
WELD:		

THIS DRAWING IS FOR OFFER PURPOSE ONLY AND MAY BE CHANGED DURING FABRICATION .