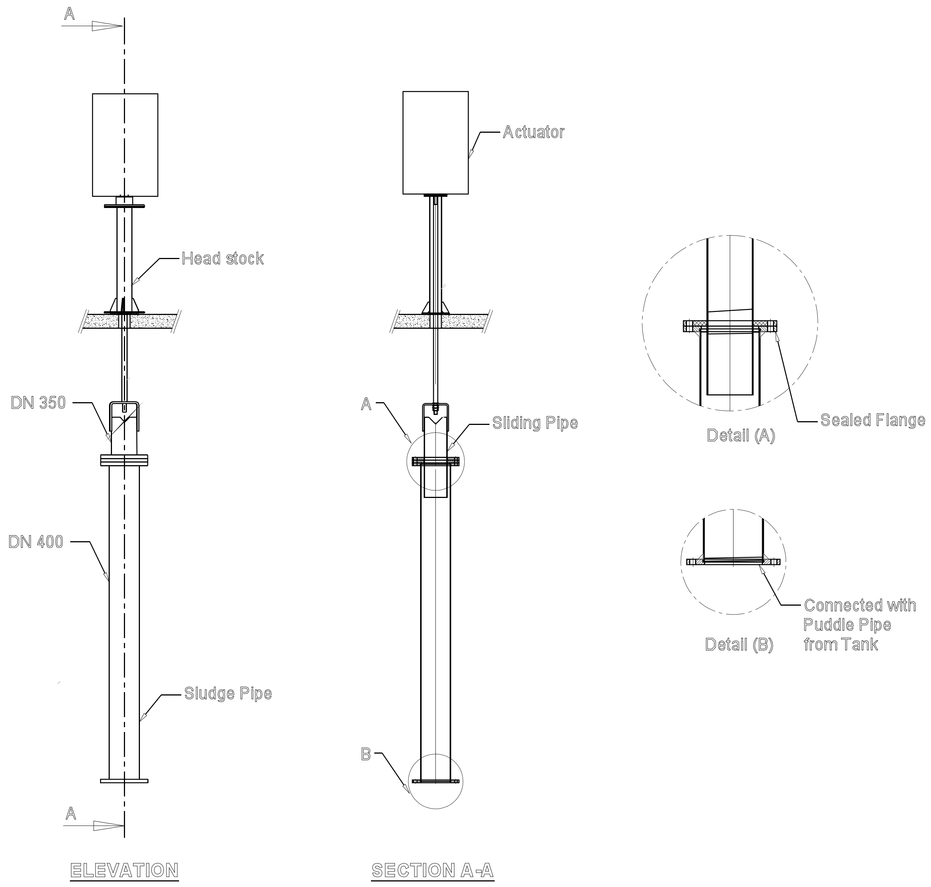

REV.NO.	DATE	ZONE	REVISION	BY.	APPVD.

General Description :-

Service : Final Settling Tank

Stem Type : Rising Stem

GENERAL TOLERANCE ACC. TO DIN 7168-M

APPVD:	W.A	
CHKD:	W.F	
DRAWN	D.M	24/03/2024
OWNER:	National Organization For Potable Water and Sanitary Drainage "NOPWASD"	
CONSULTANT:		
MAIN CONTRACTOR:		
Client	VA TECH WABAG	
CIVIL CONTRACTOR:		
MANUFACTURER:	The Integrated Environmental Technologies and Oil Services Co. S.A.E. 6 Ahmed Fawzy Bldg Block No. 1008 Sector Nasr City - Cairo - Egypt Tel: +20 2262 6540 , +20 2262 6550 Fax: +20 2262 6560 E-mail: info@ieto.com	
PROJECT:	Delga WWTP – Capacity 15000 m3/day El Fashn Center – Beni Suif Governorate	
TITLE:	Telescopic Valve (General Assembly)	
DWG NO.		SIZE: A3
SCALE:	1:10	SHEET 1 OF 1
WELD:		

THIS DRAWING IS FOR OFFER PURPOSE ONLY AND MAY BE CHANGED DURING FABRICATION .