Project Name:

lasttest

Client Name:

lt

Capacity:

lt

gjlgcjkgvk

l;knj

lj;kgh

';lgudf

1. Manual Screen

Sec01: General Data

Field	Value
Manufacturer	Ietos Factory
Service	Inlet Area
Fluid	Sewage
Operation	Manual
Quantity of Units	1
Country of Origin	Egypt

Sec02: Design Data

Field	Value
Type	Bar Coarse Screen
Chanel Height (m)	15
Channel Width (m)	1
Water Level (m)	0.75
Bar Thickness (m)	0.01
Bar Width (m)	0.025
Bar Spacing (m)	0.025
Angle	90
Hand Rack Qty	2

Sec03: Material Data

Field	Value
Frame	Stainless Steel 316
Bars	Stainless Steel 316
Rake Tube	Stainless Steel 316
Rake Plate	Stainless Steel 316

Bolts & Nuts	A4

REV.NO.	DATE	ZONE	REVISION	BY.	APPVD.

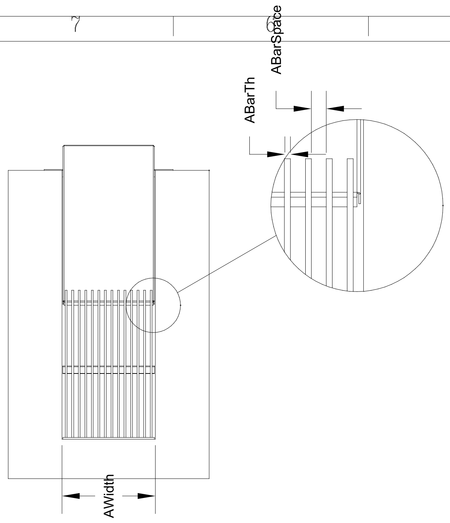

ELEVATION

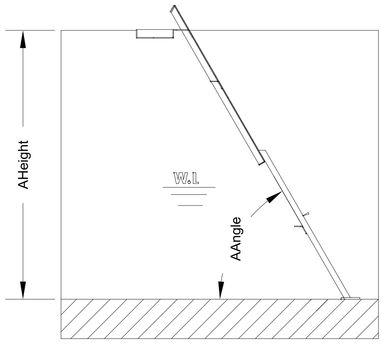

SIDE VIEW

General Description

Service	: Inlet Area
Type	: Bar Coarse Screen
Channel Depth	: 1500
Channel Width	: 600
Water Depth	: 500
Bar Section	: 12 x 50
Bar Spacing	: 25
Inclination Angle	: 60°
Material	: St.St. 304
Qty	: 1
Dimensions	: All Dimensions in mm

General Tolerance According to DIN 7168-M

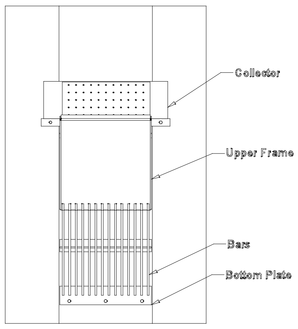

PLAN

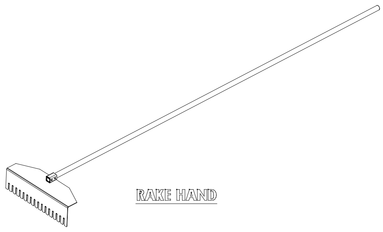

RAKE HAND

APPVD.	W.A	
CHKD.	W.F	
DRAWN	D.M	17/04/2024
OWNER:	National Organization For Potable Water and Sanitary Drainage "NOPWASD"	
CONSULTANT:		
MAIN CONTRACTOR:		
Client	VA TECH WABAG	
CIVIL CONTRACTOR:		
MANUFACTURER:	The Integrated Environmental Technologies and Offset Gear Co. S.A.E. Kilometer Sixteen Ring Road, P.O. 1006 Badr Bouran Industrial Area, Alexandria, Egypt P.O.Box: 21911 Alex 1006 Egypt Tel: (+20 3) 4590000 - (+20 3) 4590000 Fax: (+20 3) 4590000 E-mail: info@iet-eg.com	
PROJECT:	Delga WWTP – Capacity 15000 m3/day El Fashn Center – Beni Suif Governorate	
TITLE:	Manual Screen (General Assembly)	
DWG NO.		SIZE A3
SCALE 1:10		SHEET 1 OF 1
WELD:		

THIS DRAWING IS FOR OFFER PURPOSE ONLY AND MAY BE CHANGED DURING FABRICATION .

2. Mechanical Screen

Sec01: General Data

Field	Value
Manufacturer	Ietos Factory
Service	Inlet Area
Fluid	Sewage
Operation	Automatic & Manual
Quantity of Units	1
Country of Origin	Egypt

Sec02: Design Data

Field	Value
Type	Mechanical Coarse Screen-Multi rack
Channel Depth	500
Screen Width (mm)	300
Water Level (mm)	600
Bar Th (mm)	10
Bar Width (mm)	500
Bar Spacing (mm)	25
Inclination Degree (Deg)	70

Sec03: Gearmotor Data

Field	Value
Power Required (Wat)	41.66
Power Supply	380/3/50
Driving Unit Service Factor	2
Motor Insulation Protection	IP 65
Isolation / Temp. Class	Class F/B

Sec04: Control panel Data

Field	Value
Voltage	380
Phase	3
Frequency	50
Insulation Protection	IP 65
Panel Thickness	2

Sec05: Material Data

Field	Value
Screen Bars	Stainless Steel 316
Frame	Stainless Steel 316
Rack	Stainless Steel 316
Rack (Teeth)	Artelon
Sprockets	Stainless Steel 316

Sec06: Other Data

Field	Value
One Rack	Yes
Two sets of bearings	Yes

REV.NO.	DATE	ZONE	REVISION	BY.	APPVD.

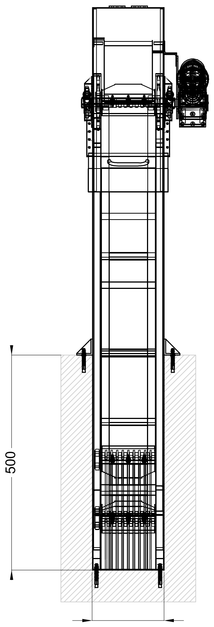

ELEVATION

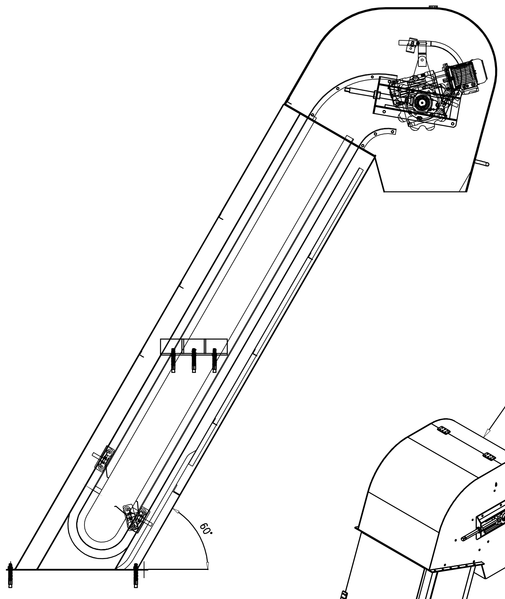

SIDE VIEW

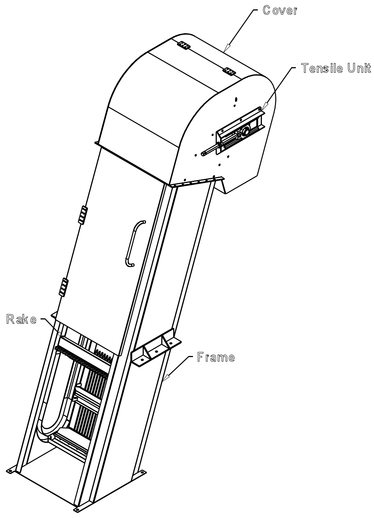

ISOMETRIC

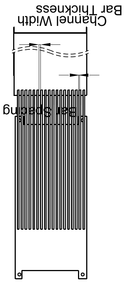

BARS

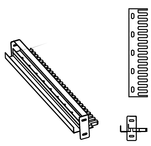

Vertical & Horizontal Adjustable Rake

General Description

Service	: Inlet Area
Type	:Mechanical Coarse Screen Multi rake
Channel Depth	: 1500
Channel Width	: 600
Water Depth	: 500
Bar Section	: 12 x 50
Bar Spacing	: 15
Inclination Angle	: 60°
Material	: St.St. 304
Qty	: 3
Dimensions	: All Dimensions in mm

General Tolerance According to DIN 7168-M

APPVD:	W.A	
CHKD:	W.F	
DRAWN	D.M	01/09/2024
OWNER:	National Organization For Potable Water and Sanitary Drainage "NOPWASD"	
CONSULTANT:		
MAIN CONTRACTOR:		
Client	VA TECH WABAG	
CIVIL CONTRACTOR:		
MANUFACTURER:	The Integrated Environmental Technologies and Oil Services Co. S.A.E. El-Ashrafy Housing Bldg Block No. 1008 Beside Shooting Club Nasr City, Cairo, Egypt P.O.Box: 1673 Cairo 11511 Tel: +20 2262 6545 , +20 2262 6546 Fax: +20 2262 6545 E-mail: info@ieto.com	
PROJECT:	Delga WWTP – Capacity 15000 m3/day El Fashn Center – Beni Suif Governorate	
TITLE:	Mechanical Screen (General Assembly)	
DWG NO.		SIZE: A3
SCALE:	1:10	SHEET 1 OF 1
WELD:		

THIS DRAWING IS FOR OFFER PURPOSE ONLY AND MAY BE CHANGED DURING FABRICATION .

3. Belt Conveyor

Sec01: General Data

Field	Value
Manufacturer	Ietos Factory
Service	Screening Area
Fluid	Screening Disposals
Operation	Automatic & Manual
Quantity of Units	1
Country of Origin	Egypt

Sec02: Design Data

Field	Value
Belt Width	205
Belt Length	603
Belt Thickness	10
Mounting	Horizontal
Chute	Included

Sec03: Gearbox Data

Field	Value
Type of drive	Gear Motor
Power	11.90
Power Supply	380/3/50
Driving Unit Service Factor	â‰¥ 2
Motor Insulation Protection	IP 66
Isolation / Temp. Class	Class F/B
Gear Motor	Rossi/Bonfiglioli

Sec04: Motor Data

Field	Value
Frame	Hot Dip Galvanized Steel
Idlers	Coated Steel Unit
Belt	Triple-Ply Nylon Layer
Driving & Driven Drum Set	Coated Steel Unit
Belt Scrapper	Rubber
Bolts & Nuts	A4

Sec05: Material Data

Field	Value
1. One set of bearing	Yes
2. Five rollers with accessories	Yes
3. One set of bearing for motor	Yes

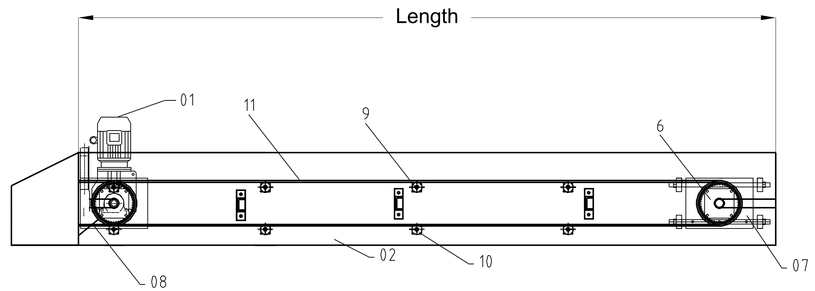

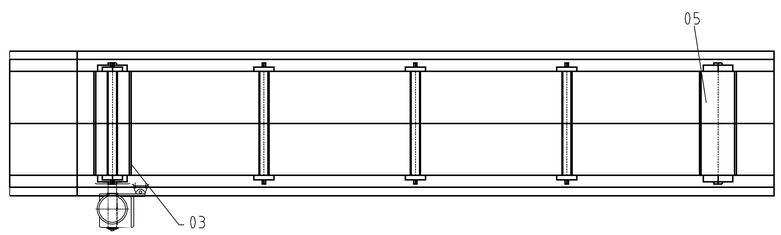

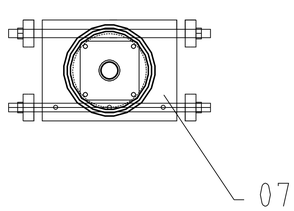

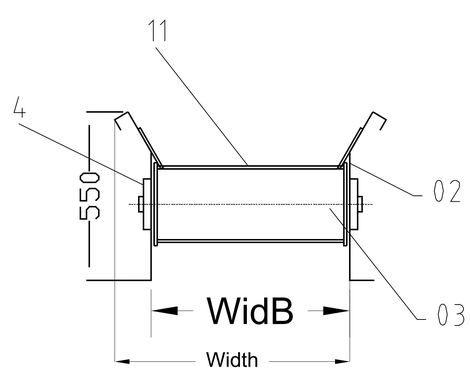

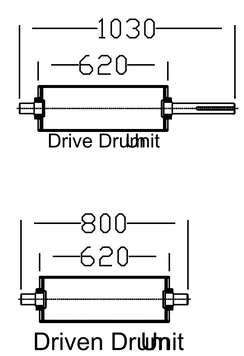

TURN KEY CONTRACTORS:

Z.C.E

ELZAHRAA

AUTOSATRAD ROAD _ ARAB ABOSAAD _ CAIRO _ HELWAN

elzahraa.eng2014@gmail.com

TITALE

Belt conveyor

SCALE	REF. DWG. NO.			SIZE	REV.
DRAWN	PREPARED	CHECKED	APPROVED		DATE
K.T	A.S	A.S	S.MICHAEL		