Project Name:

TESTING_A_0001

Client Name:

q

Capacity:

q

q

1. Gritremoval

Sec01: General Data

Field	Value
Manufacturer	Ietos Factory
Service	Grit & Grease Removal Tank
No of Channels per Bridge	One Channel
Fluid	Sewage
Operation	Automatic & Manual
Quantity of Units	1
Country of Origin	Egypt

Sec02: Design Data

Field	Value
Type	Longitudinal Scraper Bridge
Channel Length	750015312
Channel Depth	3190453543
Channel Width	250013512
Water Depth	2000
Bridge Length	2900 approx.
Walkway Width	750
Handrail Height	1000
Side Plate (Safety)	100
Scraper Height	â‰¥ 300

Sec03: Walkway, Handrail, Wheel Data

Field	Value
Drive Wheel Quantity	4
Drive Wheel Diameter	Acc. To Design

Drive Wheel Material	Polyurethane Coated Carbon Steel 37

Sec04: Scrapper Data

Field	Value
Power	0.37
Power Supply	380 /3 /50
Driving Unit Service Factor	â‰¥ 2
Motor Insulation Protection	IP66
Isolation / Temp. Class	Class F/B

Sec05: Gearmotor Data

Field	Value
Power	0.18
Power Supply	380 /3 /50
Driving Unit Service Factor	â‰¥ 2
Motor Insulation Protection	IP65
Isolation / Temp. Class	Class F/B

Sec06: Scrapper Data

Field	Value
Voltage	380
Phase	3
Frequency	50
Insulation Protection	IP 54
Panel Thickness	2

Sec07: Drive unit

Field	Value

Bridge structure	Hot dip galvanized steel 37
Grating	Hot dip galvanized steel 37
Hand railing	Hot dip galvanized steel 37
End carriage	Hot dip galvanized steel 37
Surface scraper	Stainless Steel 316

Sec08: Control panel Data

Field	Value
1. Two complete bottom scrapers for grit	Yes
2. Two complete scrapers for oil	Yes
3. Four wheels with Rubber tires	Yes
4. Two sets of bearings	Yes

REV.NO.	DATE	ZONE	REVISION	BY.	APPVD.

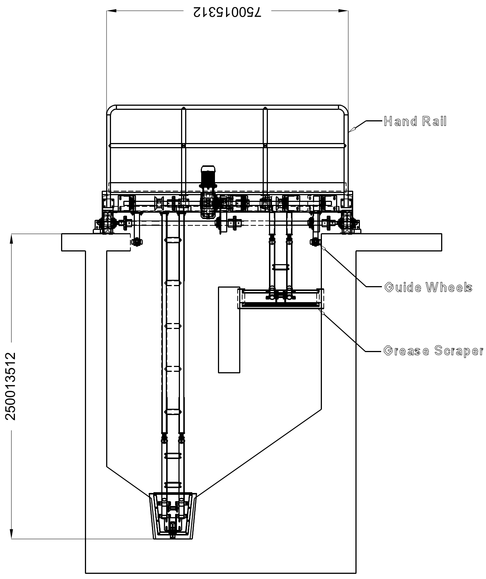

ELEVATION

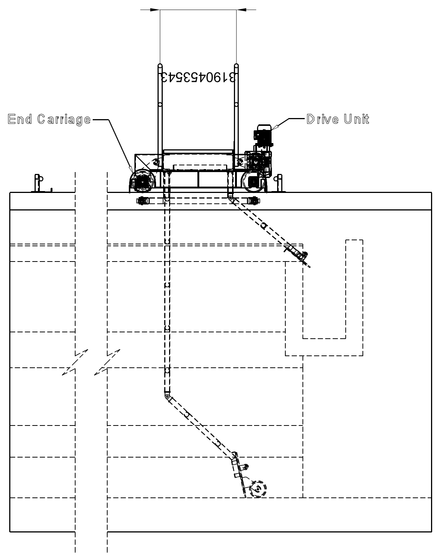

SIDE VIEW

General Description

Service	: Grit & Grease Removal Tank
Channel Width	: 2500 mm
Water depth	: 2000 mm
Type	: longitudinal Bridge
Bridge length	: 2300 Approx. mm
Walkway Width	: 750 mm
Handrail Height	: 1000 mm
Dimension	: ALL Dimension IN mm.

APPVD:	W.A	
CHKD:	W.F	
DRAWN	D.M	01/09/2024
OWNER:	National Organization For Potable Water and Sanitary Drainage "NOPWASD"	
CONSULTANT:		
MAIN CONTRACTOR:		
Client	VA TECH WABAG	
CIVIL CONTRACTOR:		
MANUFACTURER:	The Integrated Environmental Technologies and Oil Services Co. S.A.E. 6 Ahmed Fawzy Bldg Red No. 150 Sector Nasr City Cairo, Egypt P.O.Box: 1875 Nasr City Tel: +20 2 26706000 , +20 2 26706001 Fax: +20 2 26706100 E-mail: info@iteos.com	
PROJECT:	Delga WWTP – Capacity 15000 m3/day El Fashn Center – Beni Suif Governorate	
TITLE:	Grit & Grease Scraper Removal Bridge (General Assembly)	
DWG NO.		SIZE: A3
SCALE	1:10	SHEET 1 OF 1
WELD:		

THIS DRAWING IS FOR OFFER PURPOSE ONLY AND MAY BE CHANGED DURING FABRICATION .

2. Container

Sec01: General Data

Field	Value
Manufacturer	Ietos Factory
Service	Screening Area/GRC Area
Fluid	Screeings disposal & Grit
Qty	2
Operation	Manual
Country of Origin	Egypt

Sec02: Design Data

Field	Value
Capacity	2
Thickness	6
Accessories	2 Rear Swivel castors with brakes
Length	100
Width	50
Height	20
Cover	Included

Sec03: Material Data

Field	Value
Container Body	Epoxy Coated Steel
Cover	Epoxy Coated Steel
Wheels	Steel Wheels covered with polyurethane

REV.NO.	DATE	ZONE	REVISION	BY.	APPVD.

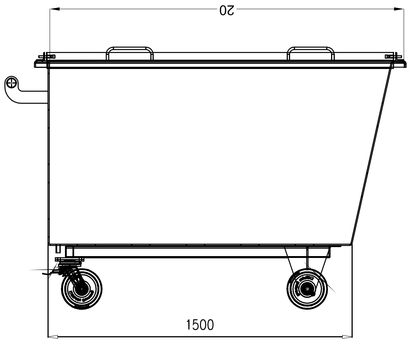

ELEVATION

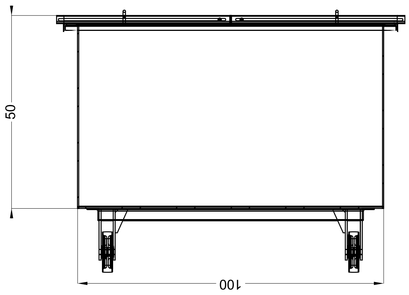

SIDE VIW

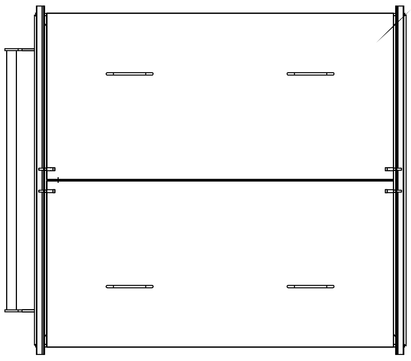

PLAN

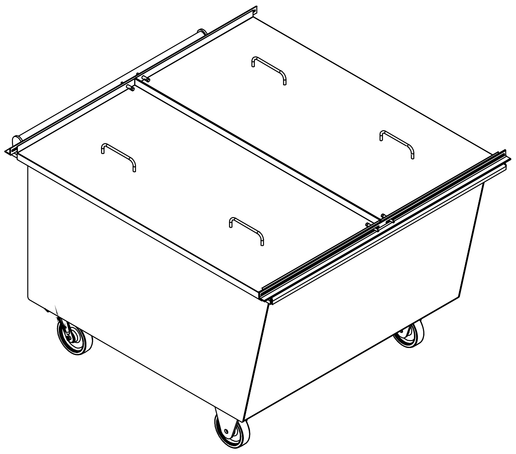

ISOMETRIC

General Description

Type : Collecting Box with Cover

Capacity : 2 m3

Length : 1700

Width : 1500

Height : 900

Thickness : 6

Material : Epoxy Coated St. 37

Qty. 2

All Dimensions in mm

GENERAL TOLERANCE ACC. TO DIN 7168-m

WELDING ACC. TO AWS D9.1

APPVD:	W.A	
CHKD:	W.F	
DRAWN	D.M	17/04/2024
OWNER:	National Organization For Potable Water and Sanitary Drainage "NOPWASD"	
CONSULTANT:		
MAIN CONTRACTOR:		
Client	VA TECH WABAG	
CIVIL CONTRACTOR:		
MANUFACTURER:	The Integrated Environmental Technologies and Oil Services Co. S.A.E. El-Ashrafy Housing Bldg Block No. 1008 Sector Nasser Industrial Area, Alexandria Road, Beni Suef, Egypt P.O Box: 2473 Beni Suef Tel: +20 82 2600400 , +20 2 26000000 Fax: +20 2 22479100 E-mail: info@ietes.com	
PROJECT:	Delga WWTP – Capacity 15000 m3/day El Fashn Center – Beni Suif Governorate	
TITLE:	Container (Collecting Box) (General Assembly)	
DWG NO.		SIZE: A3
SCALE:	1:10	SHEET: 1 OF 1
WELD:		

THIS DRAWING IS FOR OFFER PURPOSE ONLY AND MAY BE CHANGED DURING FABRICATION .

3. Primary Sedimentation Tank

Sec01:

Field	Value
Manufacturer	Ietos Factory
Service	Final Settling Tank
Fluid	Sewage
Operation	Automatic & Manual
Quantity of Units	1
Country of Origin	Egypt

Sec02:

Field	Value
Type	Rotatory Half Scraper Bridge
Tank Diameter	24123
Side Wall Depth	4320
Water depth	3500
Bridge length	14.5123 approx.
Handrail Height	1000
Walkway Width	750
Side Plate	100
Sludge Scraper Height	â‰¥ 300
Scraper Thickness	â‰¥ 4

Sec03:

Field	Value
Drive Wheel Quantity	2
Drive Wheel Diameter	400
Drive Wheel Material	Cast mild steel covered by polyurethane layer

Sec04:

Field	Value
Weir Type	V-Notch
Weir Length	75.4 Approx.
Weir Height	300
Weir Thickness	4
Weir Adjustable Height	100

Sec05:

Field	Value
Power	1.1
Power Supply	380 /3/50
Driving Unit Service Factor	â‰¥ 2
Motor Insulation Protection	IP66
Isolation / Temp. Class	Class F/B

Sec06:

Field	Value
No. of Rings	14
Origin	Europe

Sec07:

Field	Value
Voltage	380
Phase	3
Frequency	50
Insulation Protection	IP 54

Panel Thickness	2

Sec08:

Field	Value
Bridge structure	Hot dip galvanized steel.37
Hand rail	Hot dip galvanized steel.37
End carriage	Hot dip galvanized steel.37
Bottom scraper	Stainless Steel 304
Surface scraper	Stainless Steel 304

REV.NO.	DATE	ZONE	REVISION	BY.	APPVD.

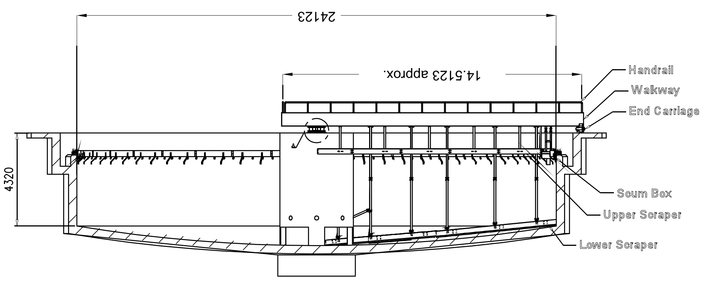

SECTION A-A

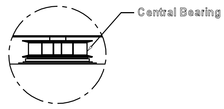

DETAIL A

General Description

Type :Rotating Half Scraper Bridge

Service :Final SettlingTank

Operation :Electrical Motor

Bridge Length :14500 mm Approx.

Dimension :All Dim. in MM

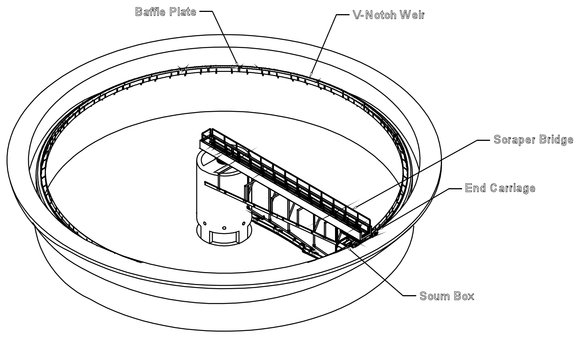

ISOMETRIC

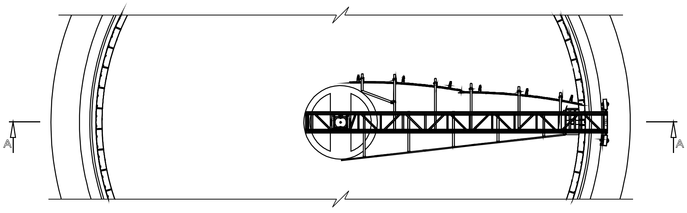

PLAN VIEW

APPVD:	W.A	
CHKD:	W.F	
DRAWN	D.M	24/03/2024
OWNER:	National Organization For Potable Water and Sanitary Drainage "NOPWASD"	
CONSULTANT:		
MAIN CONTRACTOR:		
Client	VA TECH WABAG	
CIVIL CONTRACTOR:		
MANUFACTURER:	The Integrated Environmental Technologies and Oil Services Co. S.A.E. 6 Ahmed Fawzy Bldg Rod No. 105 Sector Nasr City - Cairo - Egypt Tel : +20 2262 6545 , +20 2262 6546 Fax : +20 2262 6545 E-mail : info@ieos.com	
PROJECT:	Delga WWTP – Capacity 15000 m3/day El Fashn Center – Beni Suif Governorate	
TITLE:	Scraper Bridge (General Assembly)	
DWG NO.		SIZE A3
SCALE	1:10	SHEET 1 OF 1
WELD:		

THIS DRAWING IS FOR OFFER PURPOSE ONLY AND MAY BE CHANGED DURING FABRICATION .

4. Belt Conveyor

Sec01: General Data

Field	Value
Manufacturer	Ietos Factory
Service	Screening Area
Fluid	Screening Disposals
Operation	Automatic & Manual
Quantity of Units	1
Country of Origin	Egypt

Sec02: Design Data

Field	Value
Width	213123
Length	123123 approx.
Belt Thickness	10
Mounting	Horizontal
Chute	Included

Sec03: Gearbox Data

Field	Value
Type of drive	Gear Motor
Power	0.25
Power Supply	380/3/50
Driving Unit Service Factor	â‰¥ 2
Motor Insulation Protection	IP 66
Isolation / Temp. Class	Class F/B
Gear Motor	Rossi/Bonfiglioli

Sec04: Motor Data

Field	Value
Frame	Hot Dip Galvanized Steel
Idlers	Coated Steel Unit
Belt	Triple-Ply Nylon Layer
Driving & Driven Drum Set	Coated Steel Unit
Belt Scrapper	Rubber
Bolts & Nuts	A4

Sec05: Material Data

Field	Value
1. One set of bearing	Yes
2. Five rollers with accessories	Yes
3. One set of bearing for motor	Yes

REV.NO.	DATE	ZONE	REVISION	BY.	APPVD.

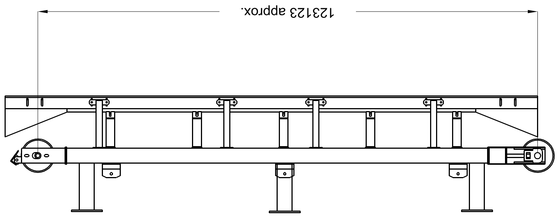

ELEVATION

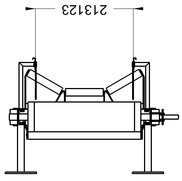

SIDE VIEW

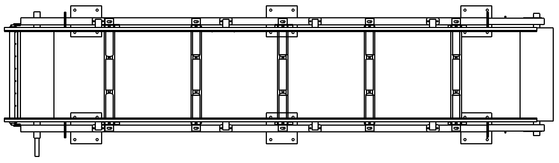

PLAN

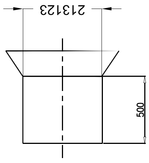

Elevation

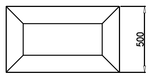

Plan

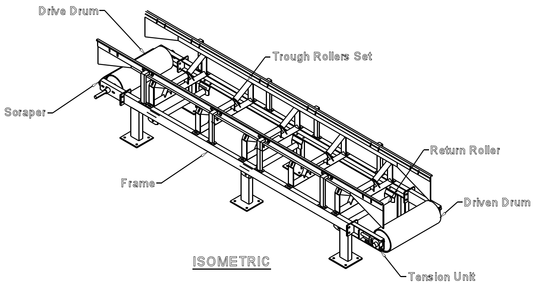

ISOMETRIC

BELT CONVEYOR CHUTE

General Description

Service	:	Screening Area
Type	:	Belt Conveyor
Operation	:	Electrical Motor
Dimension	:	All Dim. in mm
Material	:	Hot Dip Galvanized Steel

THIS DRAWING IS FOR OFFER PURPOSE ONLY AND MAY BE CHANGED DURING FABRICATION .

APPVD:	W.A		
CHKD:	W.F		
DRAWN	D.M	01/09/2024	
OWNER:	National Organization For Potable Water and Sanitary Drainage "NOPWASD"		
CONSULTANT:			
MAIN CONTRACTOR:			
Client	VA TECH WABAG		
CIVIL CONTRACTOR:			
MANUFACTURER:	The Integrated Environmental Technologies and Offsheet Co. S.A.E. Kilometer Journey Way, Block No. 1020 Sadat Studies Industrial Area, Alexandria Desert Road Cairo, Egypt P.O.Box: 1073 Cairo 11511 Tel: +20 2038 0000 , +20 2038 0000 Fax: +20 2038 0100 E-mail: info@ietco.com www.ietco.com		
PROJECT:	Delga WWTP – Capacity 15000 m3/day El Fashn Center – Beni Suif Governorate		
TITLE:	Belt Conveyor (General Assembly)		
DWG NO.		SIZE	A3
SCALE	1:10	SHEET	1 OF 1
WELD:			

5. Thickener

Sec01:

Field	Value
Manufacturer	Ietos Factory
Service	Sludge Thickener Tank
Fluid	Sewage
Operation	Automatic & Manual
Quantity of Units	1

Sec02:

Field	Value
Type	Fixed Concrete Bridge
Tank Inner Diameter	9500123
Side Wall Depth	3500123
Water Level	3000
Number of Arms	3 arms
Scraper Height	â‰¥ 250
Scraper Thickness	â‰¥ 4
Cleaning Brushes	Included

Sec03:

Field	Value
Weir Type	V-Notch
Weir Length	29.9 approx.
Weir Height	300
Weir Thickness	4
Rubber Sealing Thickness	â‰¥ 4

Sec04:

Field	Value
Power	0.37
Power Supply	380 /3/50
Driving Unit Service Factor	â‰¥ 2
Motor Insulation Protection	IP66
Isolation / Temp. Class	Class F/B

Sec05:

Field	Value
Voltage	380
Phase	3
Frequency	50
Insulation Protection	IP 54
Panel Thickness	2

Sec06:

Field	Value
Bridge structure	Concrete
Rotating shaft	Stainless Steel 304
Picket fence	Stainless Steel 304
Supporting arms	Stainless Steel 304
Weir	Stainless Steel 304

REV.NO.	DATE	ZONE	REVISION	BY.	APPVD.

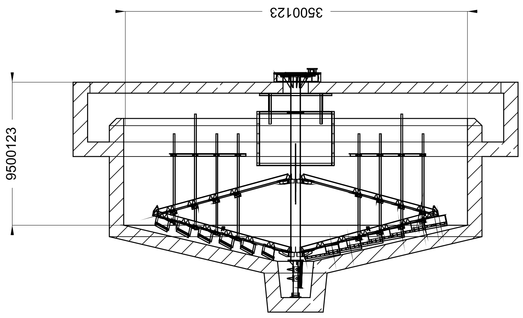

SECTION A-A
SCALE 1 : 100

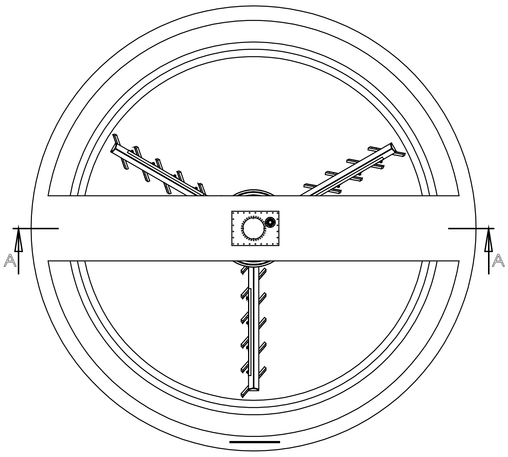

PLAN

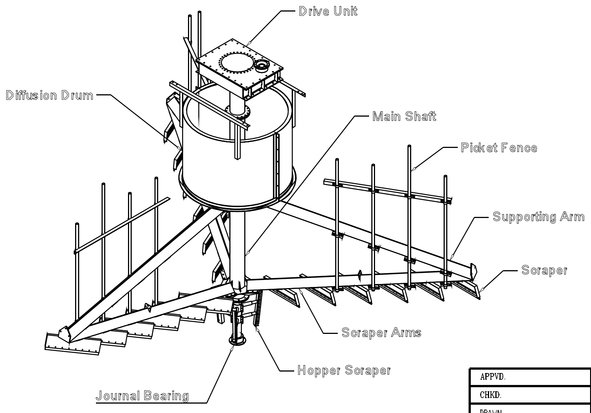

General Description

Service :Thickening Tank

Type :Sludge Thickener Scraper

Operation :Electrical Motor

Tank Diameter :9500 mm

Dimension :All Dim . in MM

APPVD:	W.A	
CHKD:	W.F	
DRAWN	D.M	24/03/2024
OWNER:	National Organization For Potable Water and Sanitary Drainage "NOPWASD"	
CONSULTANT:		
MAIN CONTRACTOR:		
Client	VA TECH WABAG	
CIVIL CONTRACTOR:		
MANUFACTURER:	The Integrated Environmental Technologies and Oil Services Co. S.A.E. El-Khamsin Housing Bldg Block No. 1008 Sector Nasser Industrial Area, Alexandria Road, Egypt P.O.Box: 2475 Cairo 11511 Tel: +10-2224 0000 , +10-2224 0000 Fax: +10-2224 0000 E-mail: info@ieto.com	
PROJECT:	Delga WWTP – Capacity 15000 m3/day El Fashn Center – Beni Suif Governorate	
TITLE:	Sludge Thickener Scraper (General Assembly)	
DWG NO.		SIZE A3
SCALE 1:10		SHEET 1 OF 1
WELD:		

THIS DRAWING IS FOR OFFER PURPOSE ONLY AND MAY BE CHANGED DURING FABRICATION .

6. Sand Silo

Sec01:

Field	Value
Manufacturer	Ietos Factory
Service	Collecting & removing sand from grit removal tank
Fluid	Sand & water
Operation	Manual
Quantity of Units	2

Sec02:

Field	Value
Capacity	3
Tank Diameter	1750123
Cylindrical Shell Vertical Height	1500
Thickness	6123
Quick Shutoff Gate Valve	Included

Sec03:

Field	Value
Silo Tank	Epoxy Coated Steel
Discharge Hopper	Epoxy Coated Steel
Silo Legs	Epoxy Coated Steel
Hand rail	Epoxy Coated Steel
Ladder	Epoxy Coated Steel

REV.NO.	DATE	ZONE	REVISION	BY.	APPVD.

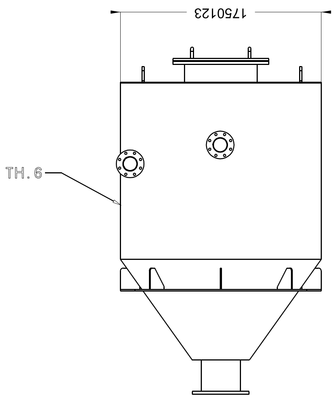

ELEVATION

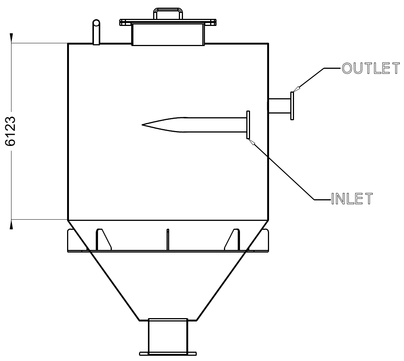

SIDE VIEW

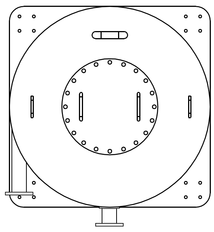

PLAN

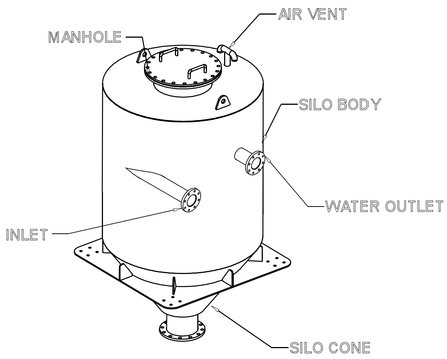

ISOMETRIC

General Description

Service	:GRC
Type	:Sand Silo
Capacity	: 3 m3
Thickness	: 6 mm
Operation	:Manual
Quantity	: 2
Dimension	:All Dim. in mm
Tolerance	:According to DIN 7168-M

APPVD:	W.A	
CHKD:	W.F	
DRAWN	D.M	17/04/2024
OWNER:	National Organization For Potable Water and Sanitary Drainage "NOPWASD"	
CONSULTANT:		
MAIN CONTRACTOR:		
Client	VA TECH WABAG	
CIVIL CONTRACTOR:		
MANUFACTURER:	The Integrated Environmental Technologies and Oil Services Co. S.A.E. Kilometer Journey Bag Road No. 108 Sadat Studies Industrial Area, Alqurt Road Cairo, Egypt P.O Box: 1073 Cairo 11511 Tel: +20 2 25354646 , +20 2 25354648 Fax: +20 2 25379180 E-mail: info@ietes.com	
PROJECT:	Delga WWTP – Capacity 15000 m3/day El Fashn Center – Beni Suif Governorate	
TITLE:	Sand Silo (General Assembly)	
DWG NO.		SIZE: A3
SCALE	1:10	SHEET 1 OF 1
WELD:		

THIS DRAWING IS FOR OFFER PURPOSE ONLY AND MAY BE CHANGED DURING FABRICATION .

7. Telescopic Valve

Sec01:

Field	Value
Manufacturer	Ietos Factory
Fluid	Sewage
Service	Final Settling Tank
Operation	Actuated (Modulated)
Qty	1
Country of Origin	Egypt

Sec02:

Field	Value
Valve Diameter	DN 400
Sliding Tube Diameter	DN 350
Adjustable Height	1000

Sec03:

Field	Value
Body	Stainless steel 304
Sliding tube	Stainless steel 304
Stem	Stainless steel 304
Sealing	Rubber
Hand wheel	Cast iron
Bolts	A2

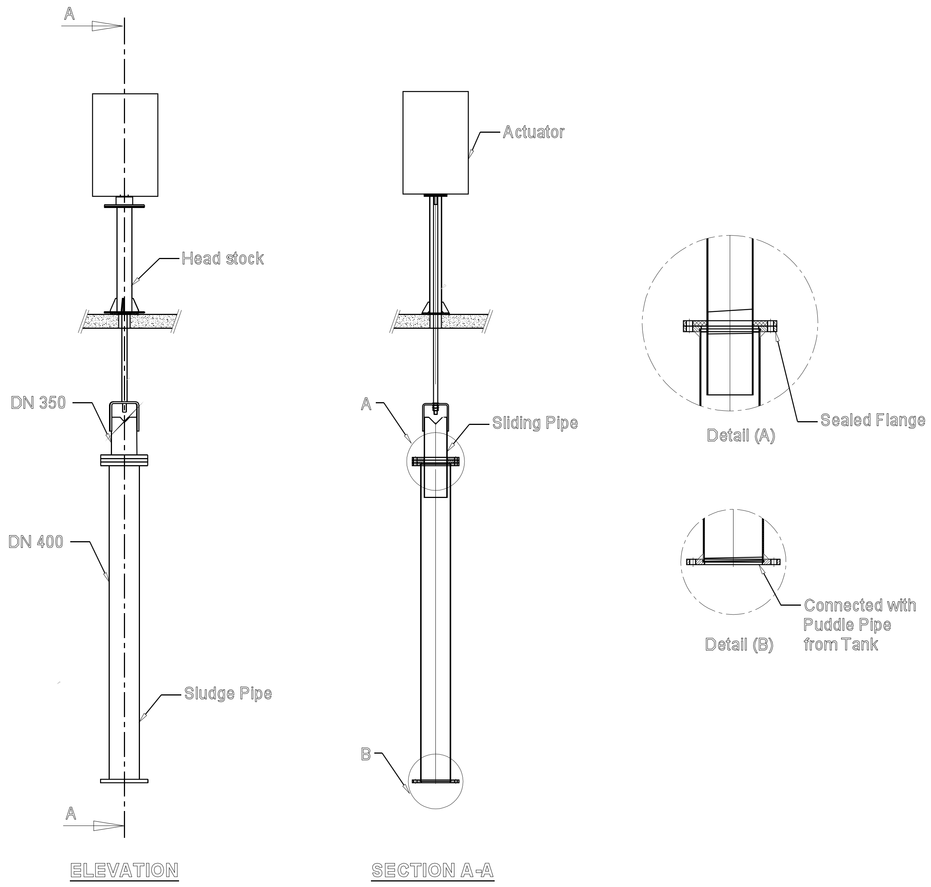

REV.NO.	DATE	ZONE	REVISION	BY.	APPVD.

General Description :-

Service : Final Settling Tank

Stem Type : Rising Stem

GENERAL TOLERANCE ACC. TO DIN 7168-M

APPVD:	W.A	
CHKD:	W.F	
DRAWN	D.M	24/03/2024
OWNER:	National Organization For Potable Water and Sanitary Drainage "NOPWASD"	
CONSULTANT:		
MAIN CONTRACTOR:		
Client	VA TECH WABAG	
CIVIL CONTRACTOR:		
MANUFACTURER:	The Integrated Environmental Technologies and Oil Services Co. S.A.E. 6 Ahmed Fawzy Bldg Block No. 1008 Sector Nasr City - Cairo - Egypt Tel: +20 2262 6540 , +20 2262 6550 Fax: +20 2262 6560 E-mail: info@ieto.com	
PROJECT:	Delga WWTP – Capacity 15000 m3/day El Fashn Center – Beni Suif Governorate	
TITLE:	Telescopic Valve (General Assembly)	
DWG NO.		SIZE: A3
SCALE:	1:10	SHEET 1 OF 1
WELD:		

THIS DRAWING IS FOR OFFER PURPOSE ONLY AND MAY BE CHANGED DURING FABRICATION .

8. Manual Screen

Sec01: General Data

Field	Value
Manufacturer	Ietos Factory
Service	Inlet Area
Fluid	Sewage
Operation	Manual
Quantity of Units	1
Country of Origin	Egypt

Sec02: Design Data

Field	Value
Type	Bar Coarse Screen
Channel Depth	1500123
Channel Width	400123
Water Level	600
Bar Thickness	12123
Bar Width	50
Bar Spacing	25123
Inclination Degree	60123Â°
Hand Rack Qty	2

Sec03: Material Data

Field	Value
Frame	Stainless Steel 316
Bars	Stainless Steel 316
Rake Tube	Stainless Steel 316
Rake Plate	Stainless Steel 316

Bolts & Nuts	A4

REV.NO.	DATE	ZONE	REVISION	BY.	APPVD.

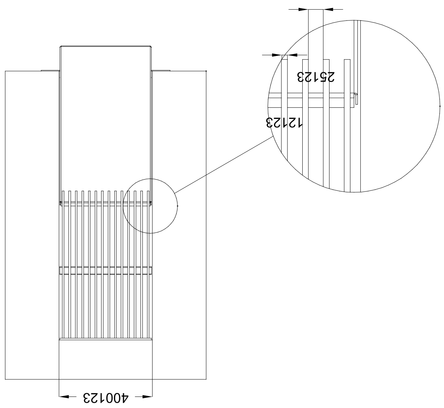

ELEVATION

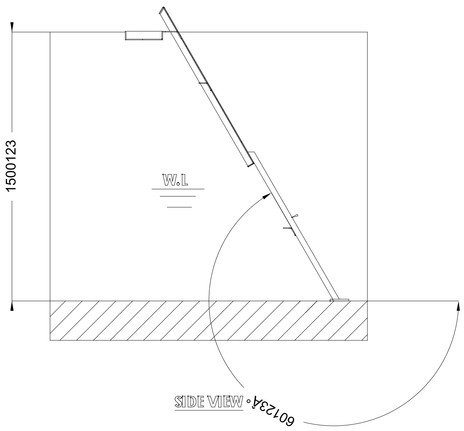

SIDE VIEW

General Description

Service	: Inlet Area
Type	: Bar Coarse Screen
Channel Depth	: 1500
Channel Width	: 600
Water Depth	: 500
Bar Section	: 12 x 50
Bar Spacing	: 25
Inclination Angle	: 60°
Material	: SLSL 304
Qty	: 1
Dimensions	: All Dimensions in mm

General Tolerance According to DIN 7168-M

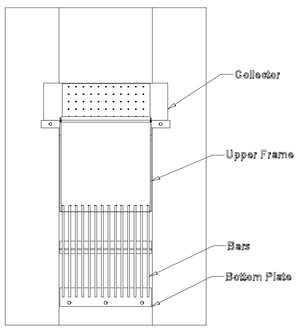

PLAN

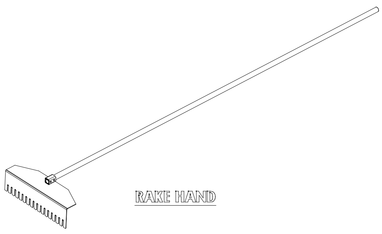

RAKE HAND

APPVD.	W.A	
CHKD.	W.F	
DRAWN	P.M	17/04/2024
OWNER:	National Organization For Potable Water and Sanitary Drainage "NOPWASD"	
CONSULTANT:		
MAIN CONTRACTOR:		
Client	VA TECH WABAG	
CIVIL CONTRACTOR:		
MANUFACTURER:	The Integrated Environmental Technologies and Oilfield Jeer Co. S.A.E. Al-Khalifa Street, Big Bird Av. NW Al-Khalifa Square, Nasr City, Cairo, Egypt Fax: (+20 2) 26262000 - (+20 2) 26262020 Tel: (+20 2) 26262000 Email: info@iteco.com Public: (+20 2) 26262000	
PROJECT:	Delga WWTP – Capacity 15000 m3/day El Fashn Center – Beni Suif Governorate	
TITLE:	Inlet Screen (General Assembly)	
DWG NO.		SIZE A3
SCALE	1:10	SHEET 1 OF 1
WELD:		

THIS DRAWING IS FOR OFFER PURPOSE ONLY AND MAY BE CHANGED DURING FABRICATION .

9. Mechanical Screen

Sec01: General Data

Field	Value
Manufacturer	Ietos Factory
Service	Inlet Area
Fluid	Sewage
Operation	Automatic & Manual
Quantity of Units	1
Country of Origin	Egypt

Sec02: Design Data

Field	Value
Type	Mechanical Coarse Screen-Multi rack
Channel Depth	1500123
Channel Width	400123
Water Depth	600123
Bar Thickness	10123
Bar Width	50123
Bar Spacing	25123
Inclination Degree	60123

Sec03: Gearmotor Data

Field	Value
Power	0.37
Power Supply	380/3/50
Driving Unit Service Factor	2
Motor Insulation Protection	IP 65
Isolation / Temp. Class	Class F/B

Sec04: Control panel Data

Field	Value
Voltage	380
Phase	3
Frequency	50
Insulation Protection	IP 65
Panel Thickness	2

Sec05: Material Data

Field	Value
Screen Bars	Stainless Steel 316
Frame	Stainless Steel 316
Rack	Stainless Steel 316
Rack (Teeth)	Artelon
Sprockets	Stainless Steel 316

Sec06: Other Data

Field	Value
One Rack	Yes
Two sets of bearings	Yes

REV.NO.	DATE	ZONE	REVISION	BY.	APPVD.

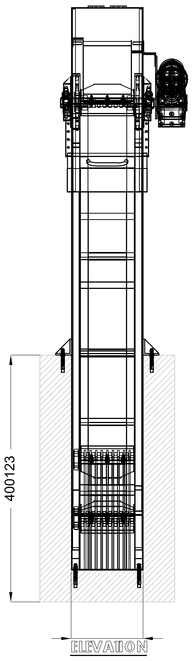

ELEVAION

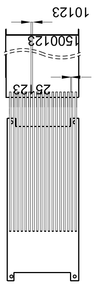

BARS

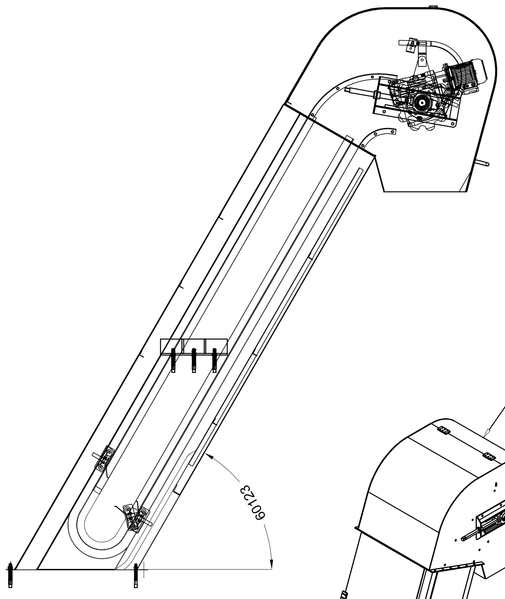

SIDE VIEW

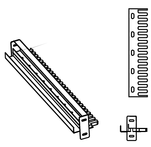

Vertical & Horizontal Adjustable Rake

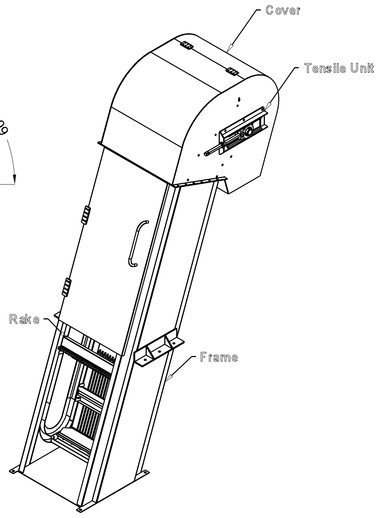

ISOMETRIC

General Description

Service	: Inlet Area
Type	:Mechanical Coarse Screen Multi rake
Channel Depth	: 1500
Channel Width	: 600
Water Depth	: 500
Bar Section	: 12 x 50
Bar Spacing	: 15
Inclination Angle	: 60°
Material	: St.St. 304
Qty	: 3
Dimensions	: All Dimensions in mm

General Tolerance According to DIN 7168-M

APPVD:	W.A	
CHKD:	W.F	
DRAWN	D.M	01/09/2024
OWNER:	National Organization For Potable Water and Sanitary Drainage "NOPWASD"	
CONSULTANT:		
MAIN CONTRACTOR:		
Client	VA TECH WABAG	
CIVIL CONTRACTOR:		
MANUFACTURER:	The Integrated Environmental Technologies and Oil Services Co. S.A.E. El-Ashrafy Housing Bldg Block No. 1008 Sector Nasser Industrial Area, Alexandria Governorate, Egypt P.O Box: 2473 Sidi Gaber Tel: (+2) 03/5454545 , (+2) 03/5454546 Fax: (+2) 03/5454545 E-mail: info@iteos.com	
PROJECT:	Delga WWTP – Capacity 15000 m3/day El Fashn Center – Beni Suif Governorate	
TITLE:	Mechanical Screen (General Assembly)	
DWG NO.		SIZE A3
SCALE 1:10		SHEET 1 OF 1
WELD:		

THIS DRAWING IS FOR OFFER PURPOSE ONLY AND MAY BE CHANGED DURING FABRICATION .