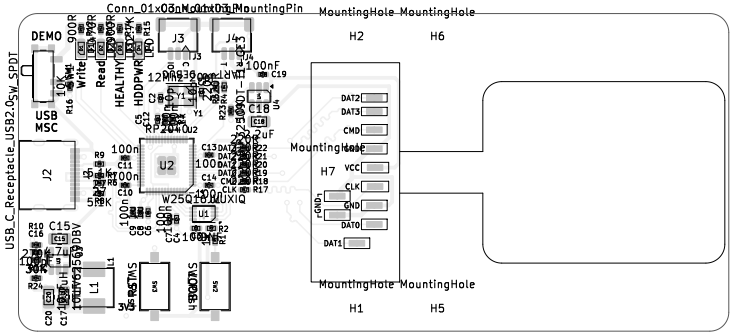

Board2Pdf: Black And White TOP – Page 1/2

Will Whang

Sheet: Black And White TOP
File: MK4001MTD_USB_ReaderHOTDOG.kicad_pcb

Title: MK4001MTD USB Reader

Size: A4	Date: 2026-03-16	**Rev: v1.1 HOTDOG**
KiCad E.D.A. 8.0.7		Id: 1/1

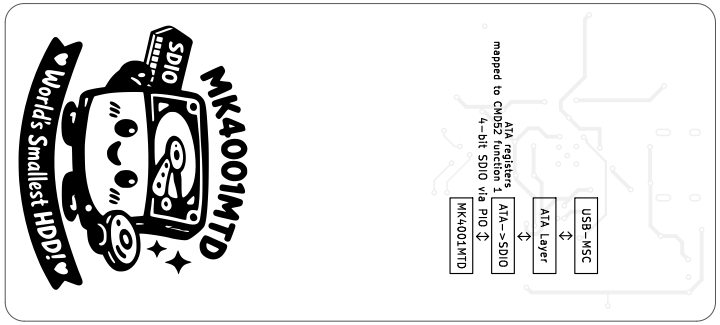

Board2Pdf: Black And White BOT – Page 2/2

Will Whang

Sheet: Black And White BOT
File: MK4001MTD_USB_ReaderHOTDOG.kicad_pcb

Title: MK4001MTD USB Reader

Size: A4	Date: 2026-03-16	**Rev: v1.1 HOTDOG**
KiCad E.D.A. 8.0.7		Id: 1/1