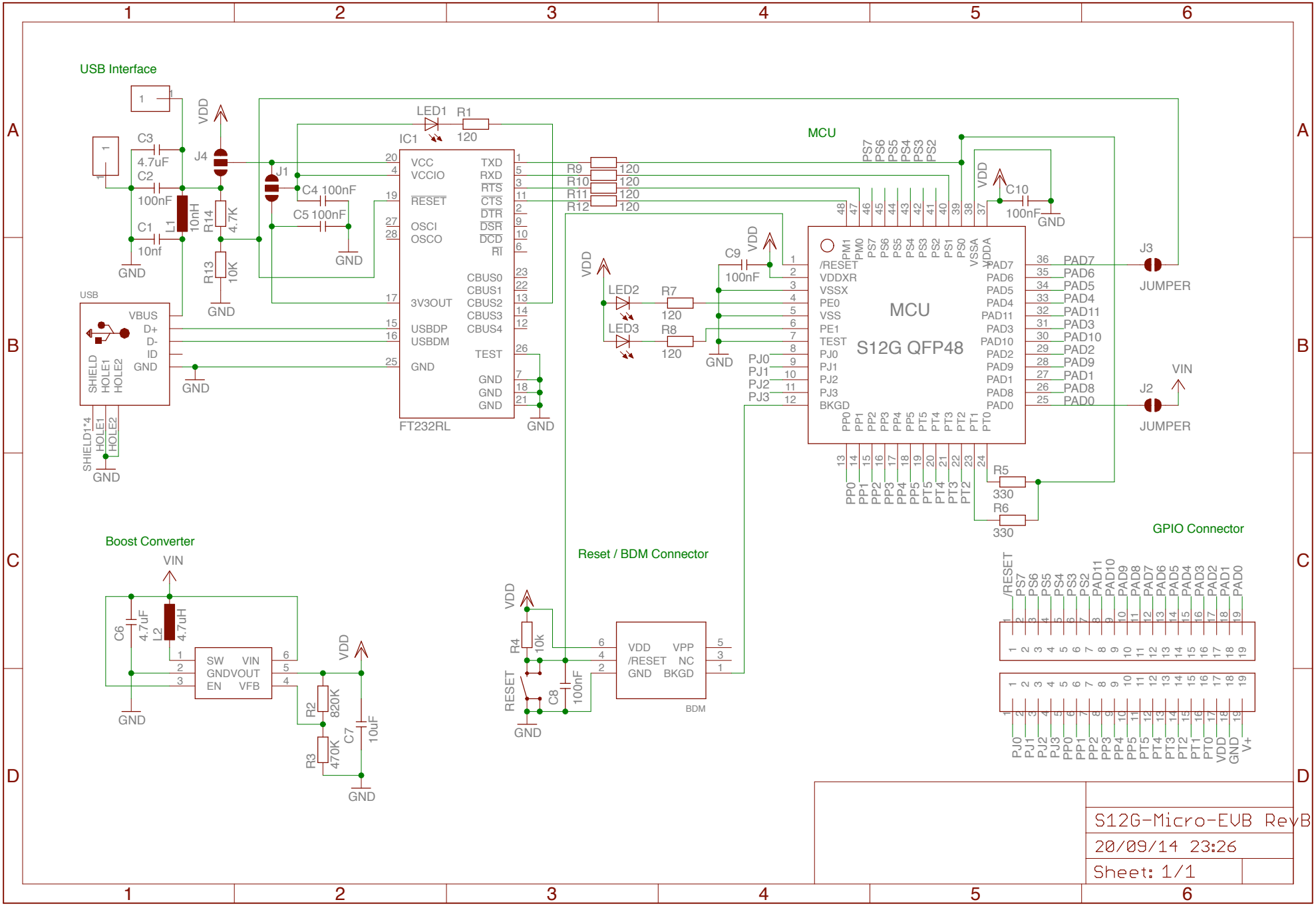
USB Interface
MCU
Boost Converter
Reset / BDM Connector
GPIO Connector
IC1
FT232RL
S12G QFP48
J1
J2
J3
J4
USB
JUMPER
VIN
VDD
GND
LED1
LED2
LED3
RESET
BDM
S12G-Micro-EVB RevB
20/09/14 23:26
Sheet: 1/1