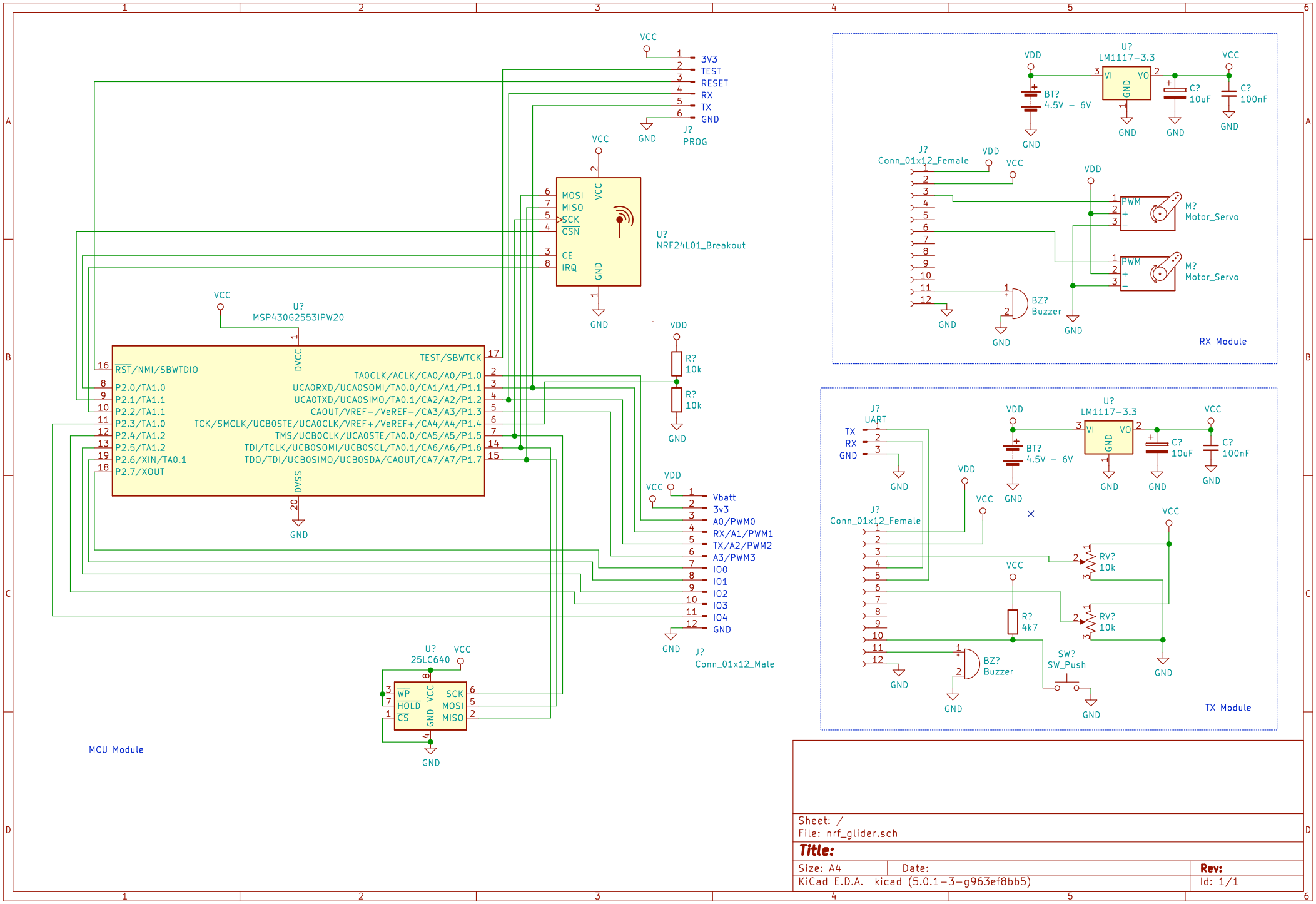

Sheet: /
File: nrf_glider.sch

Title:

Size: A4	Date:	Rev:
KiCad E.D.A. kicad (5.0.1-3-g963ef8bb5)		Id: 1/1