产品信息 PRODUCT INFORMATION

TTL to RS485 Communication Module Single-chip Level Conversion

Industrial-grade TTL to RS485 mo

dule, using the original MAX485/

SP485 chip, with half-hole gold-p

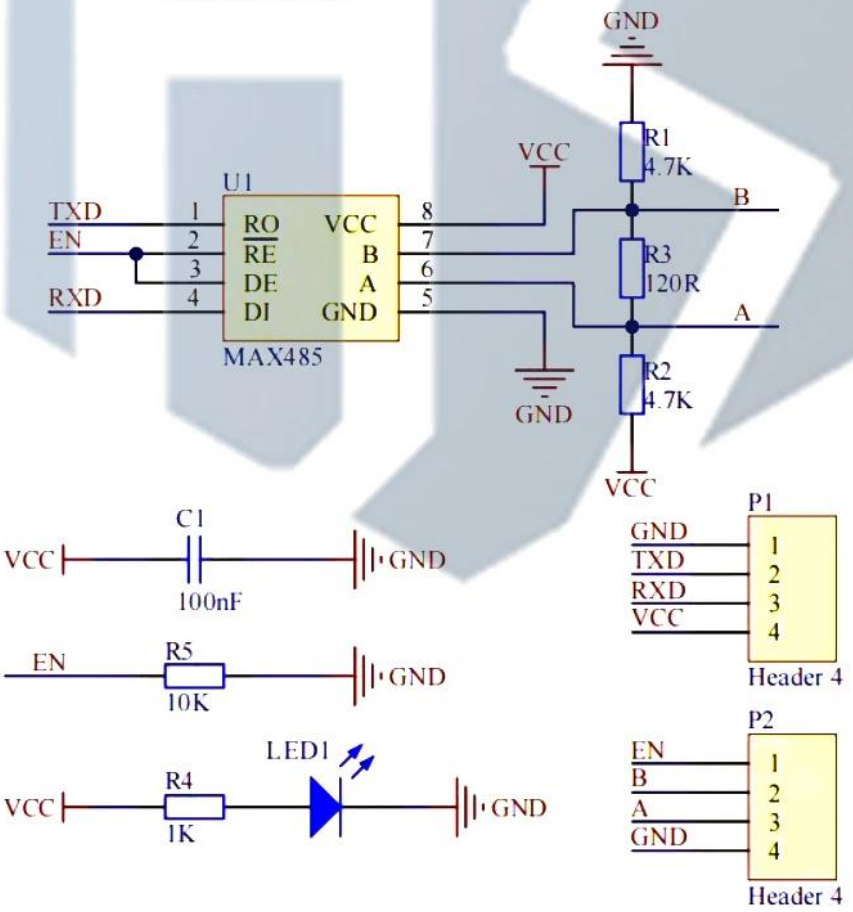

Dimension drawing:

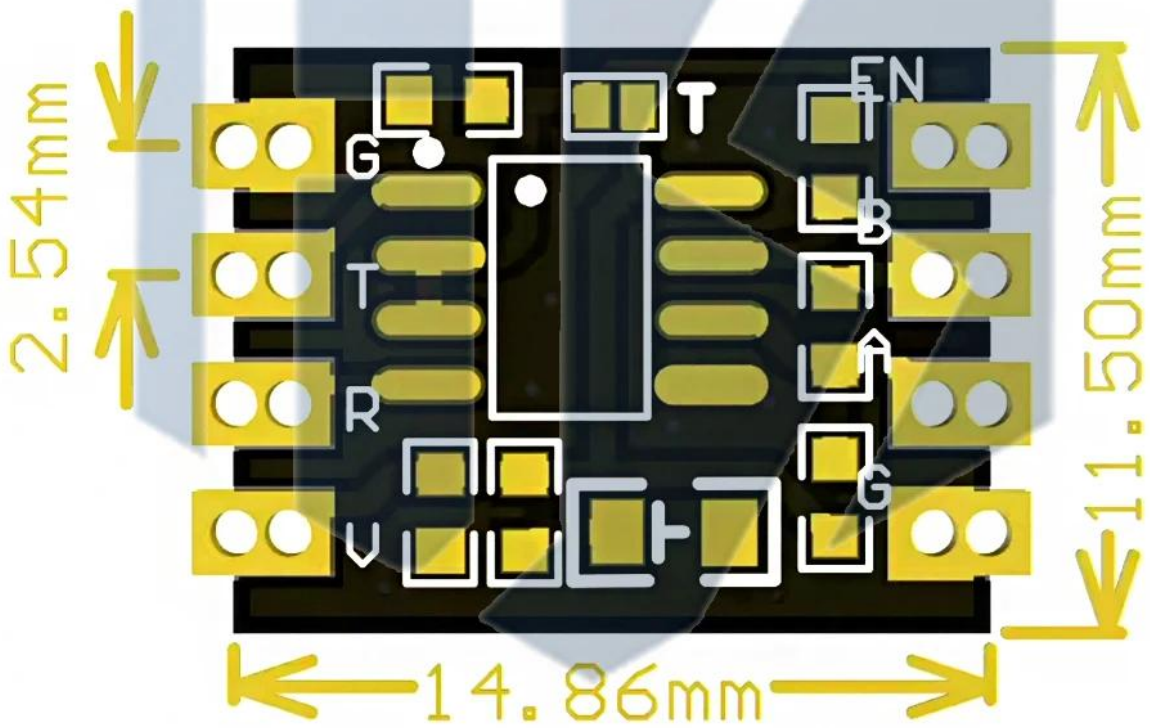

产品图片 PRODUCT PICTURE