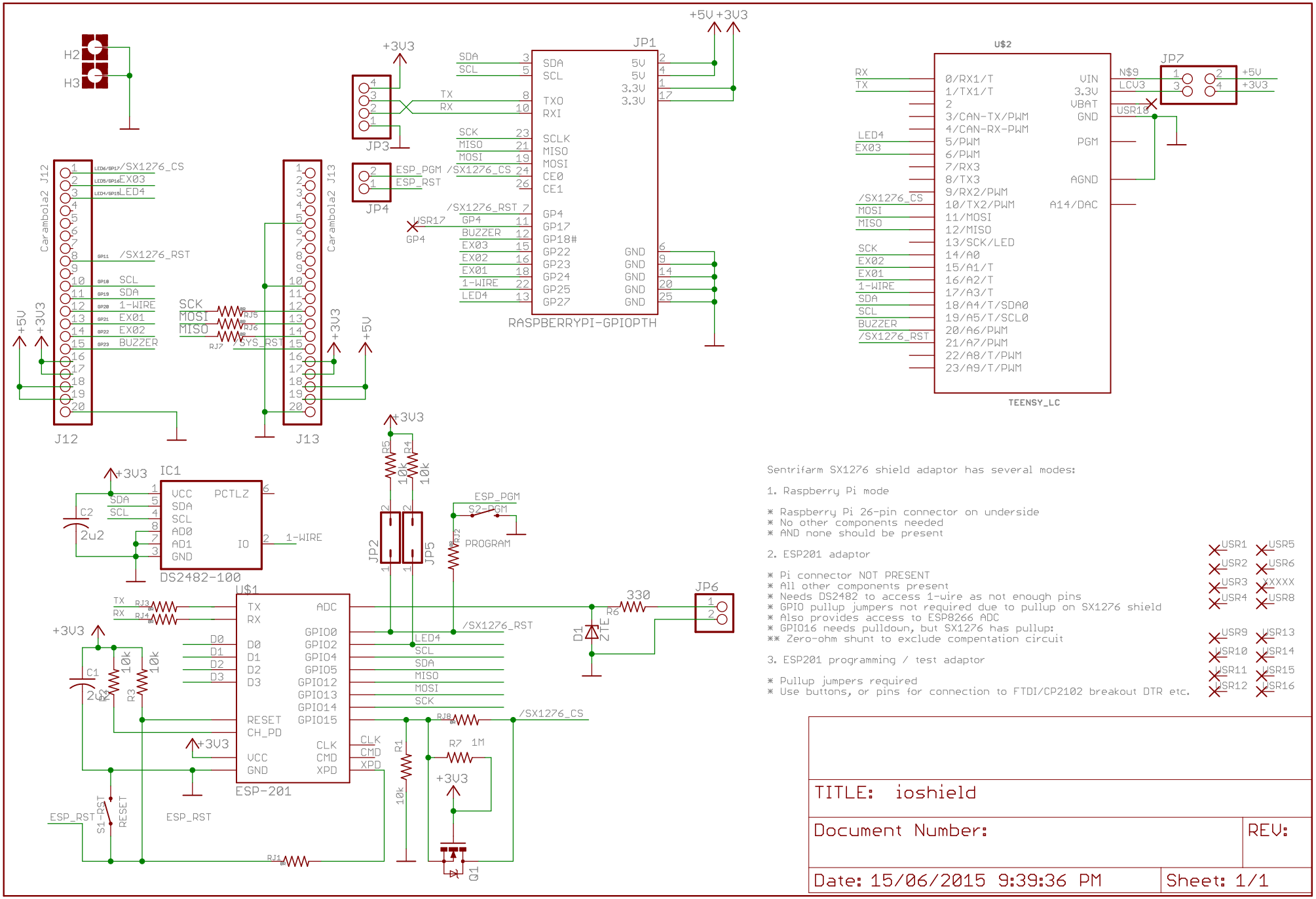
H2
H3
Caramboia2 J12
J12
Caramboia2 J13
J13
/SX1276_CS
EX03
LED4
/SX1276_RST
SCL
SDA
1-WIRE
EX01
EX02
BUZZER
SCK
MOSI
MISO
/SYS_RST
+5V
+3V3
JP1
RASPBERRYPI-GPIOPTH
JP3
JP4
ESP_PGM
ESP_RST
TX
RX
GP4
U$2
TEENSY_LC
JP7
N$9
LCV3
USR18
IC1
DS2482-100
PCTLZ
IO
JP2
JP5
PROGRAM
S2-PGM
JP6
330
D1
ZTE
U$1
ESP-201
ADC
GPIO0
GPIO2
GPIO4
GPIO5
GPIO12
GPIO13
GPIO14
GPIO15
RESET
CH_PD
CLK
CMD
XPD
S1-RST
RESET
R7 1M
Q1
Sentrifarm SX1276 shield adaptor has several modes:
1. Raspberry Pi mode
* Raspberry Pi 26-pin connector on underside
* No other components needed
* AND none should be present
2. ESP201 adaptor
* Pi connector NOT PRESENT
* All other components present
* Needs DS2482 to access 1-wire as not enough pins
* GPIO pullup jumpers not required due to pullup on SX1276 shield
* Also provides access to ESP8266 ADC
* GPIO16 needs pulldown, but SX1276 has pullup:
** Zero-ohm shunt to exclude compentation circuit
3. ESP201 programming / test adaptor
* Pullup jumpers required
* Use buttons, or pins for connection to FTDI/CP2102 breakout DTR etc.
USR1
USR2
USR3
USR4
USR5
USR6
USR8
USR9
USR10
USR11
USR12
USR13
USR14
USR15
USR16
TITLE: ioshield
Document Number:
REV:
Date: 15/06/2015 9:39:36 PM
Sheet: 1/1