Module reset signal /TTL level@3.3V,low reset.

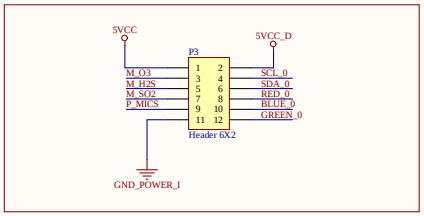

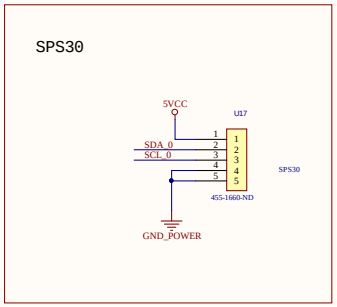

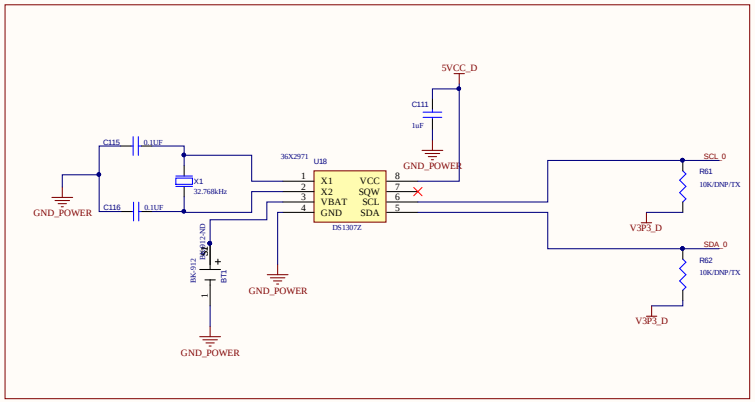

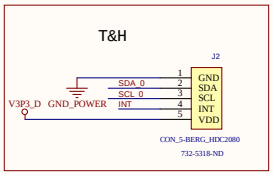

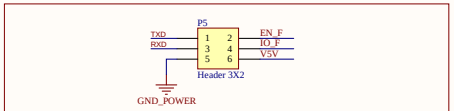

ESP32 will enter the serial boot loader when the GPIO0 is kept low on the reset.

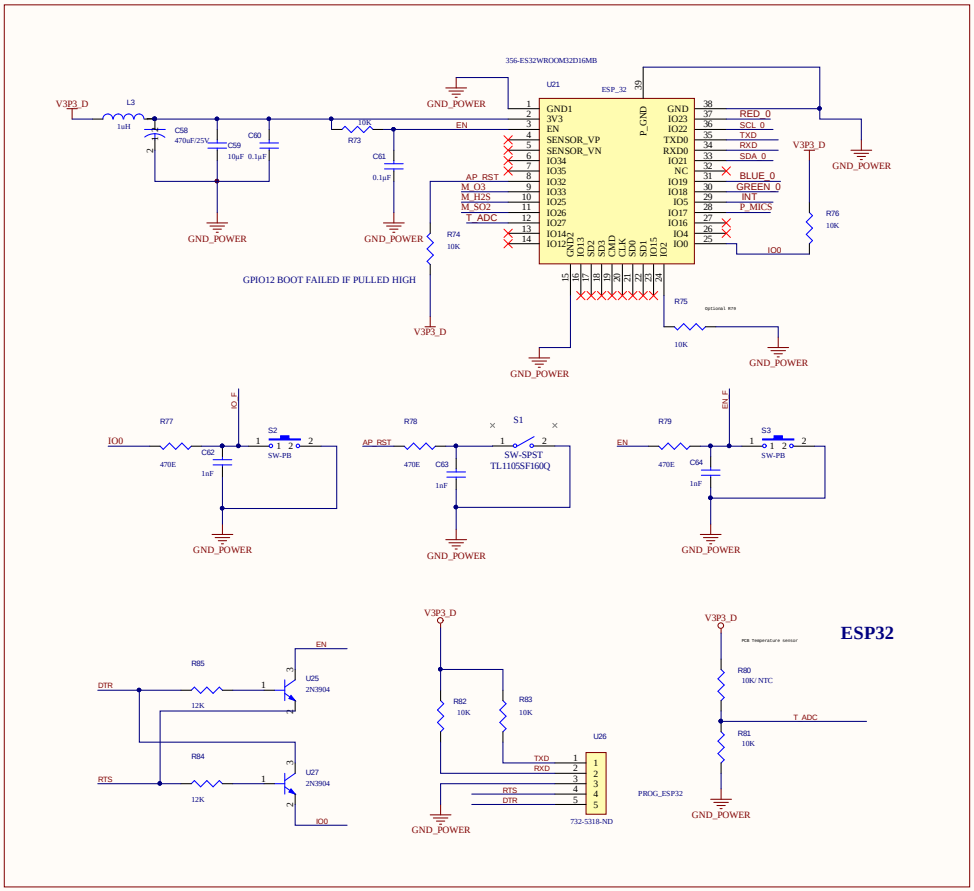

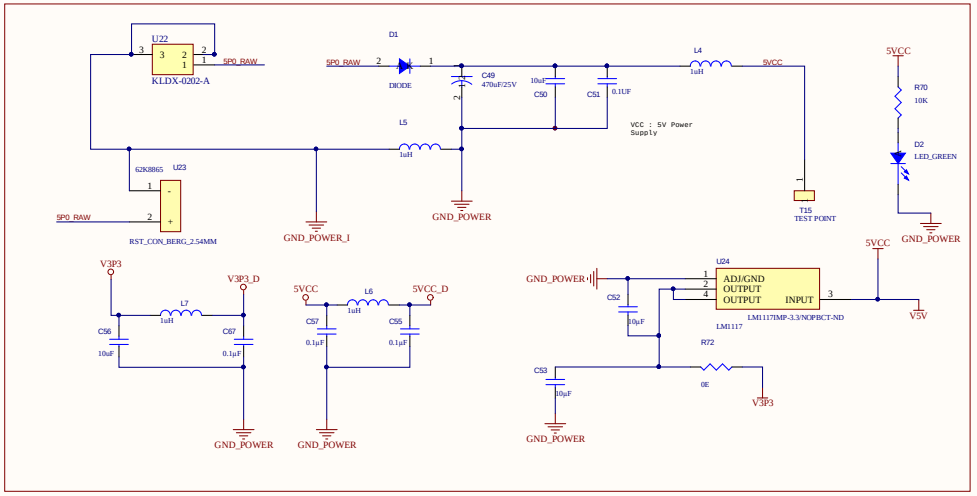

Title		
Size C	Number	Revision
Date: 2/22/2021	Sheet of	
File: \\...\MGD.SCH1.SchDoc	Drawn By:	

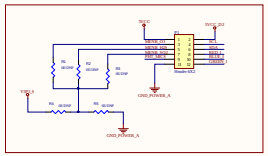

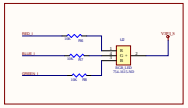

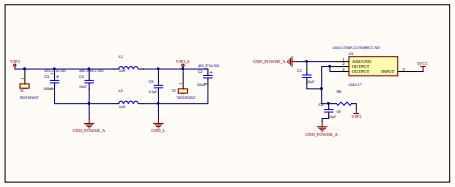

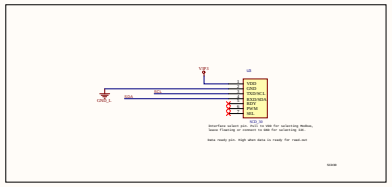

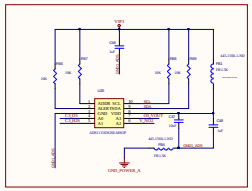

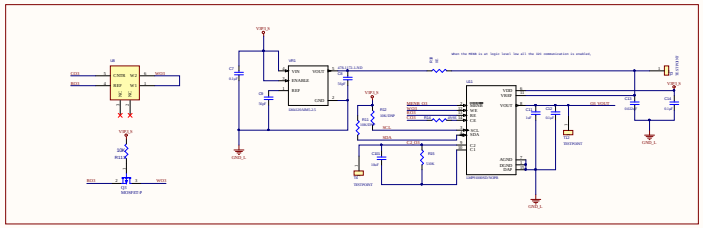

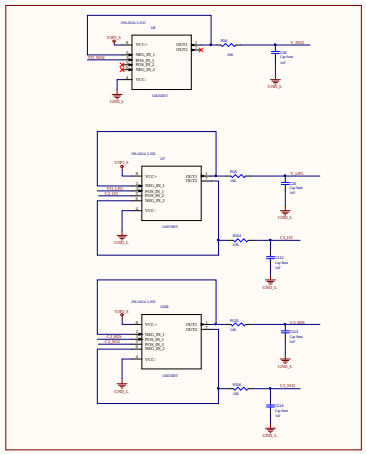

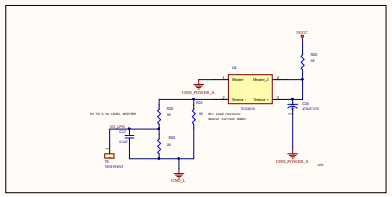

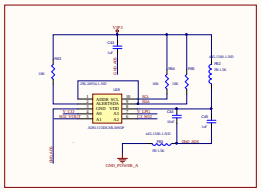

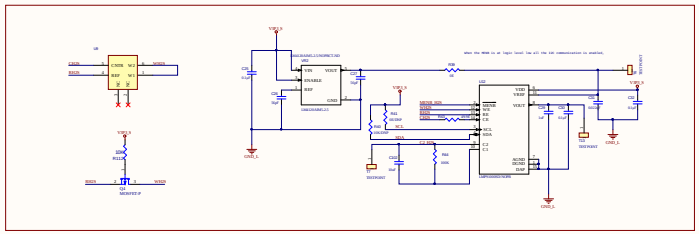

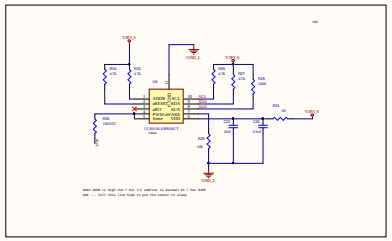

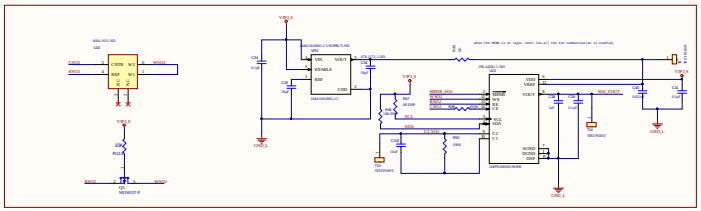

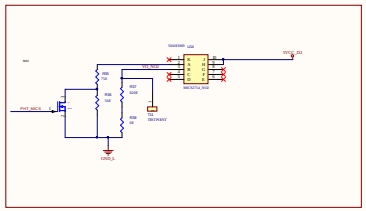

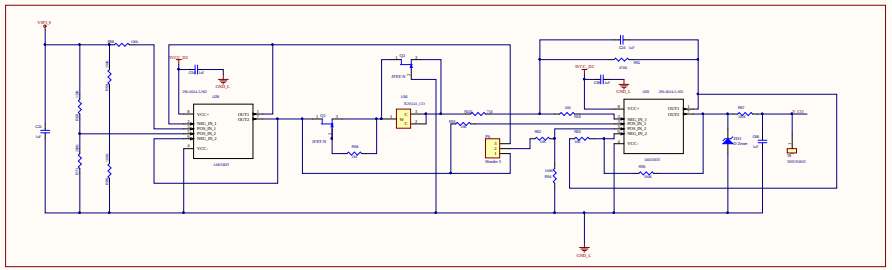

Title *			
Size: A	Number:	Revision:	
Date: 2025-03-27	Time: 19:53:13	Sheet 1 of 1	
File:	C:\Users\Mohammad\OneDrive\Desktop\Project\Project.PcbDoc		

Altium

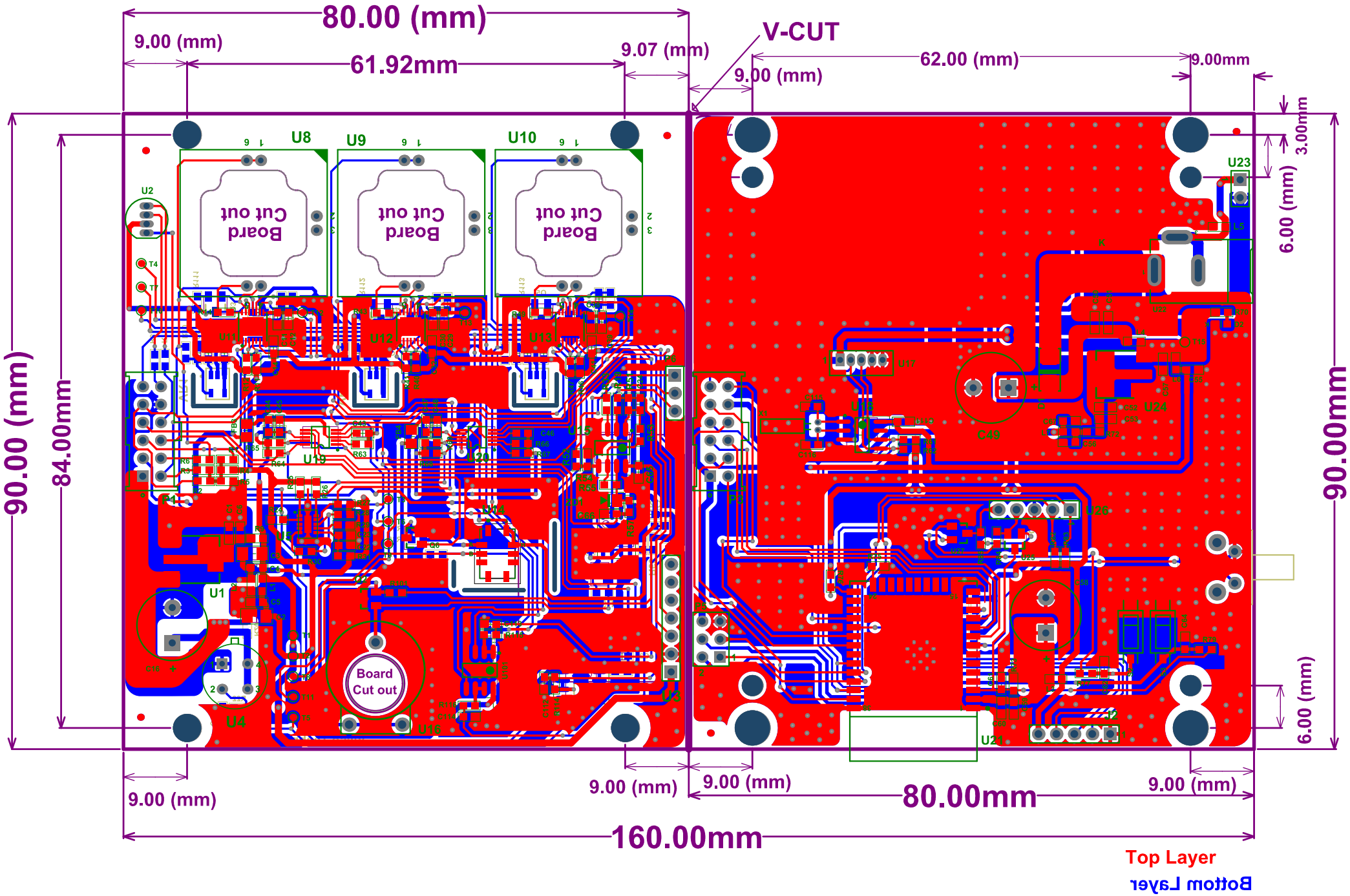
80.00 (mm)
9.00 (mm)
61.92mm
9.07 (mm)
V-CUT
9.00 (mm)
62.00 (mm)
9.00mm
3.00mm
6.00 (mm)
90.00 (mm)
84.00mm
90.00mm
6.00 (mm)
9.00 (mm)
9.00 (mm)
9.00 (mm)
80.00mm
9.00 (mm)
160.00mm
Board Cut out
Board Cut out
Board Cut out
Board Cut out
U8
U9
U10
U23
U2
U1
U4
U3
U11
U12
U13
U19
U20
U14
U16
U17
U18
U24
U26
U21
C49
Top Layer
Bottom Layer

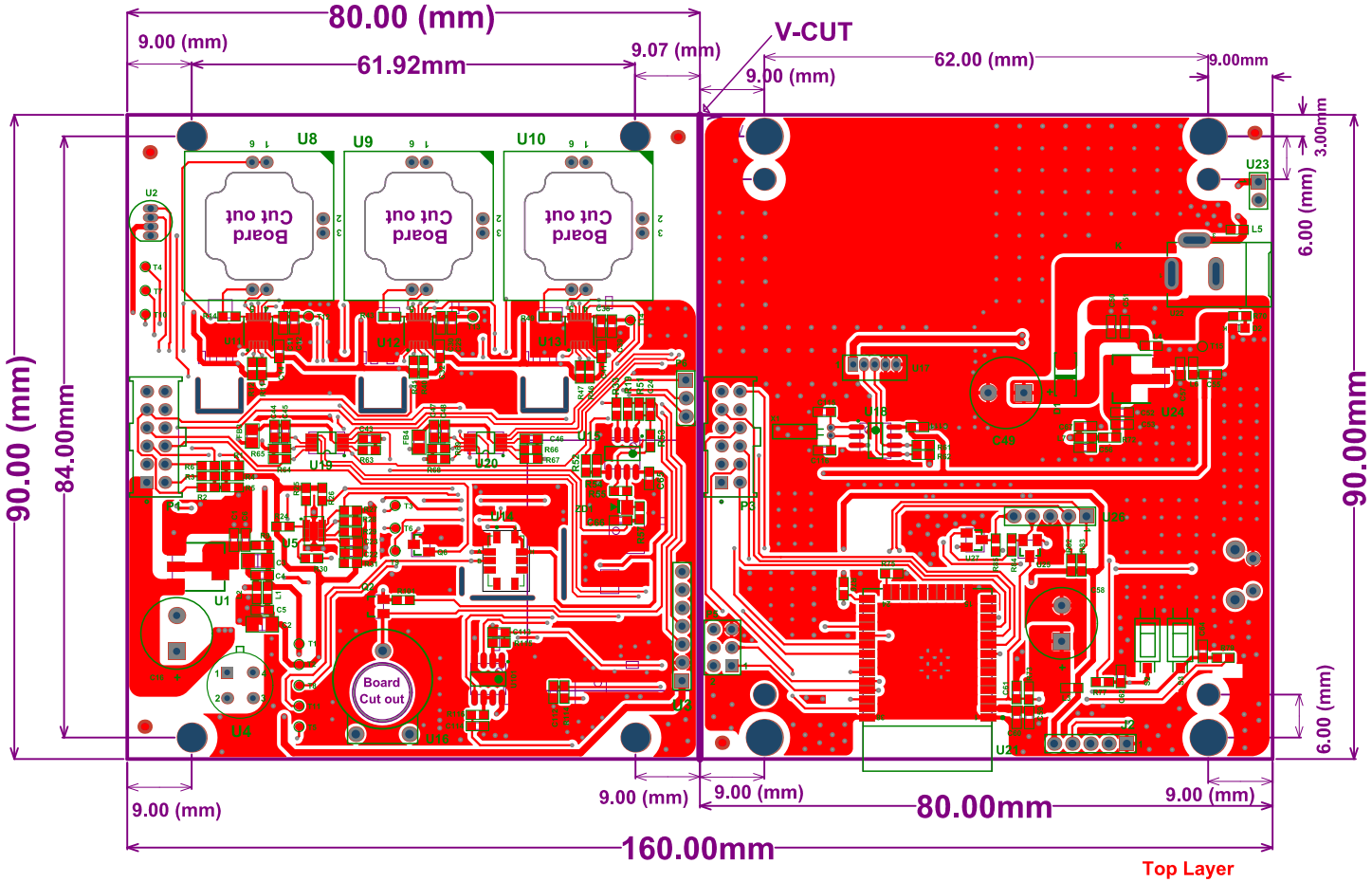
80.00 (mm)
9.00 (mm)
61.92mm
9.07 (mm)
V-CUT
9.00 (mm)
62.00 (mm)
9.00mm
3.00mm
6.00 (mm)
90.00 (mm)
84.00mm
90.00mm
6.00 (mm)
9.00 (mm)
9.00 (mm)
9.00 (mm)
80.00mm
9.00 (mm)
160.00mm
Board Cut out
Board Cut out
Board Cut out
Board Cut out
U8
U9
U10
U23
U2
U1
U4
U5
U19
U20
U18
U24
U26
U21
C49
P3
Top Layer

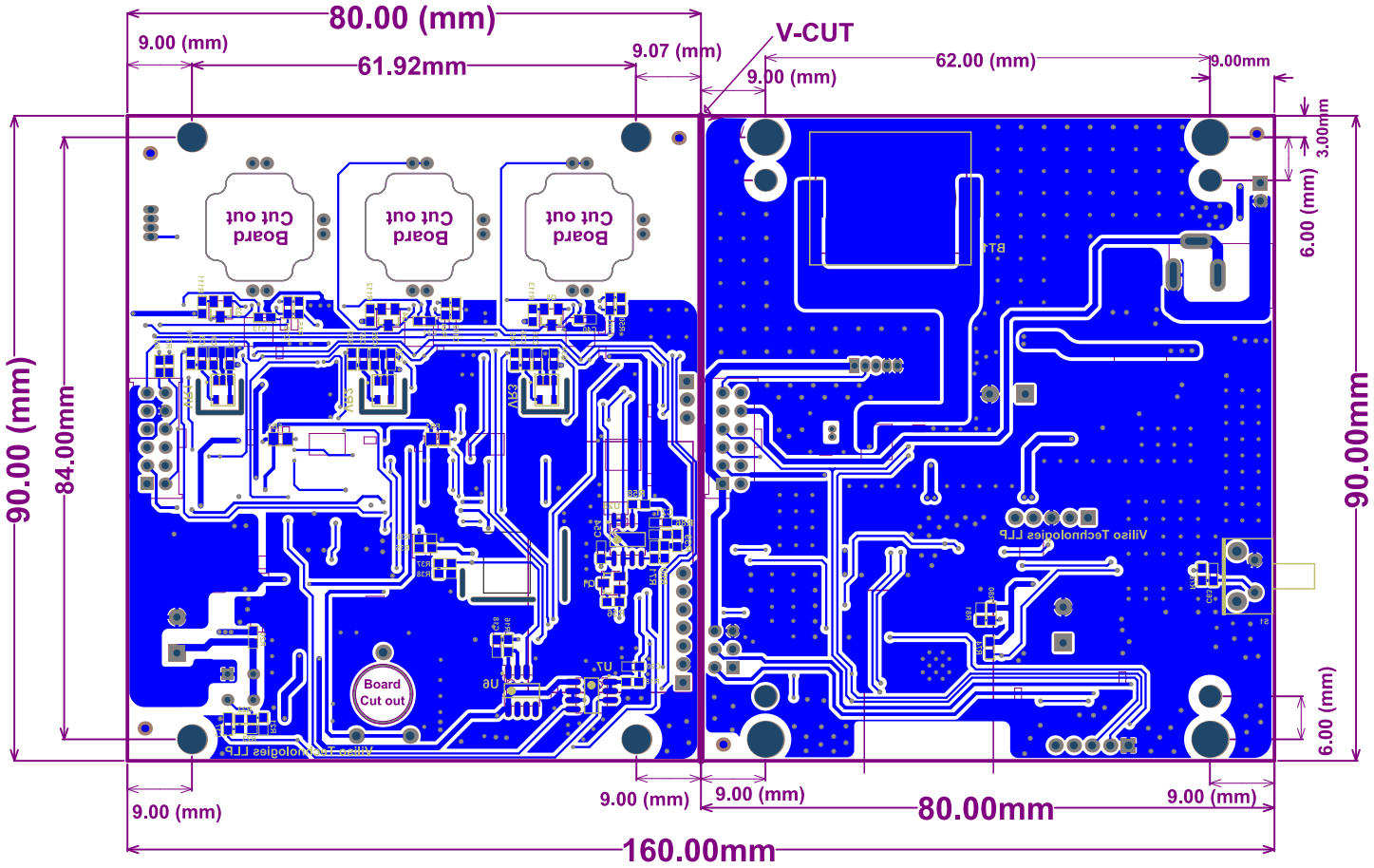
80.00 (mm)
9.00 (mm)
61.92mm
9.07 (mm)
V-CUT
9.00 (mm)
62.00 (mm)
9.00mm
3.00mm
6.00 (mm)
90.00 (mm)
84.00mm
90.00mm
Board Cut out
Board Cut out
Board Cut out
Board Cut out
Vilias Technologies LLP
Vilias Technologies LLP
6.00 (mm)
9.00 (mm)
9.00 (mm)
9.00 (mm)
80.00mm
9.00 (mm)
160.00mm
Bottom Layer

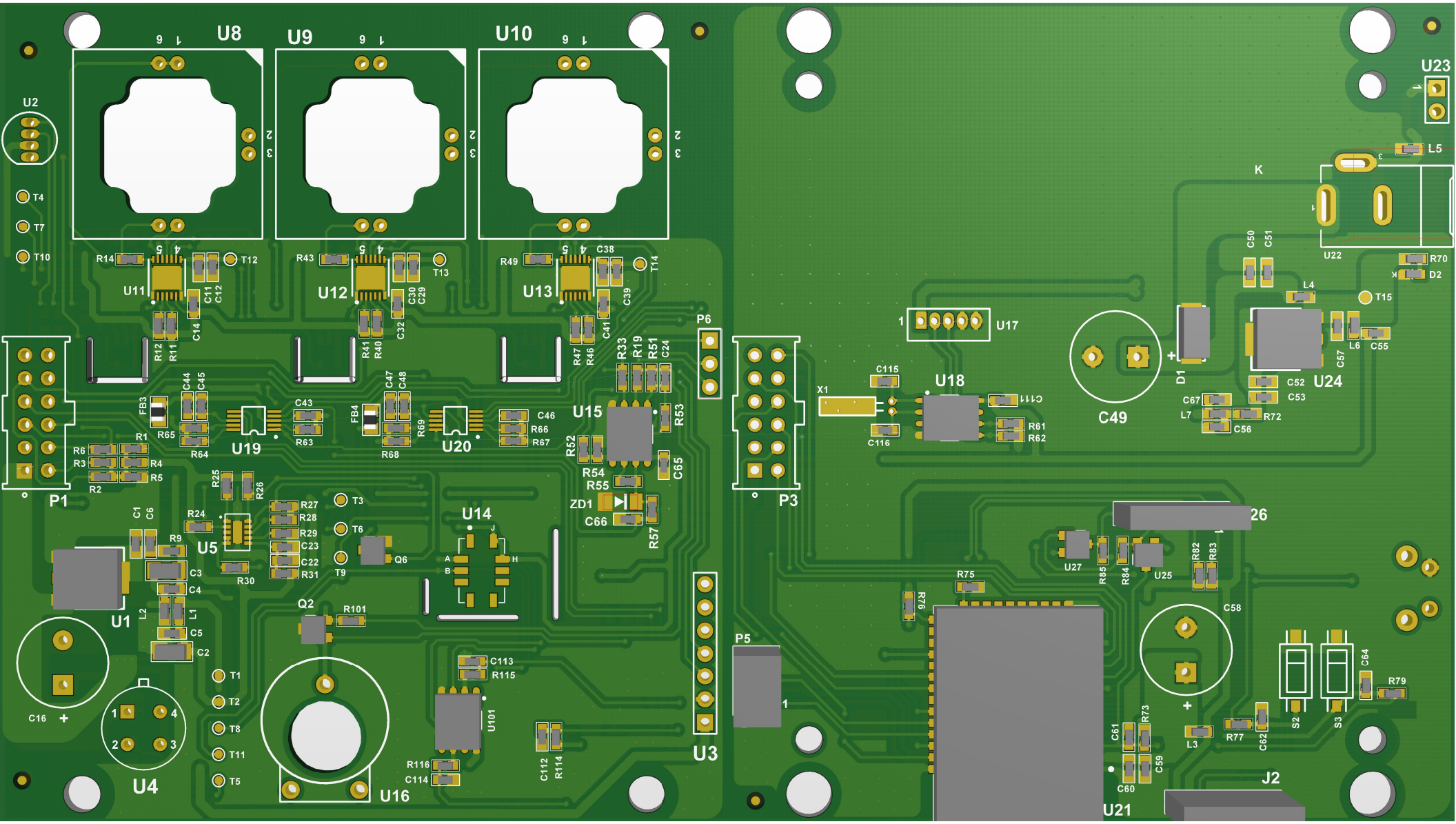
U8
U9
U10
U2
T4
T7
T10
R14
U11
T12
R43
U12
T13
R49
U13
T14
C38
C39
C41
C11
C12
C14
C30
C29
C32
R12
R11
R41
R40
R47
R46
R33
R19
R51
C24
P6
P1
FB3
R65
C44
C45
R64
U19
C43
R63
FB4
C47
C48
R68
R69
U20
C46
R66
R67
U15
R53
R52
R54
R55
ZD1
C66
C65
R57
R6
R3
R1
R4
R5
R2
R25
R26
R24
R9
U5
R27
R28
R29
C23
C22
R31
R30
T3
T6
T9
Q6
U14
A
B
J
H
C1
C6
C3
C4
L2
L1
C5
C2
U1
Q2
R101
C16
U4
T1
T2
T8
T11
T5
U16
C113
R115
U101
R116
C114
C112
R114
U3
P5
P3
X1
C115
C116
U18
C111
R61
R62
U17
C49
D1
C50
C51
L4
U24
C52
C53
C67
L7
R72
C56
C57
L6
C55
T15
U22
K
L5
U23
R70
D2
26
U27
R85
R84
U25
R82
R83
R75
R76
C58
R79
C64
S2
S3
L3
R77
C62
C61
R73
C59
C60
U21
J2

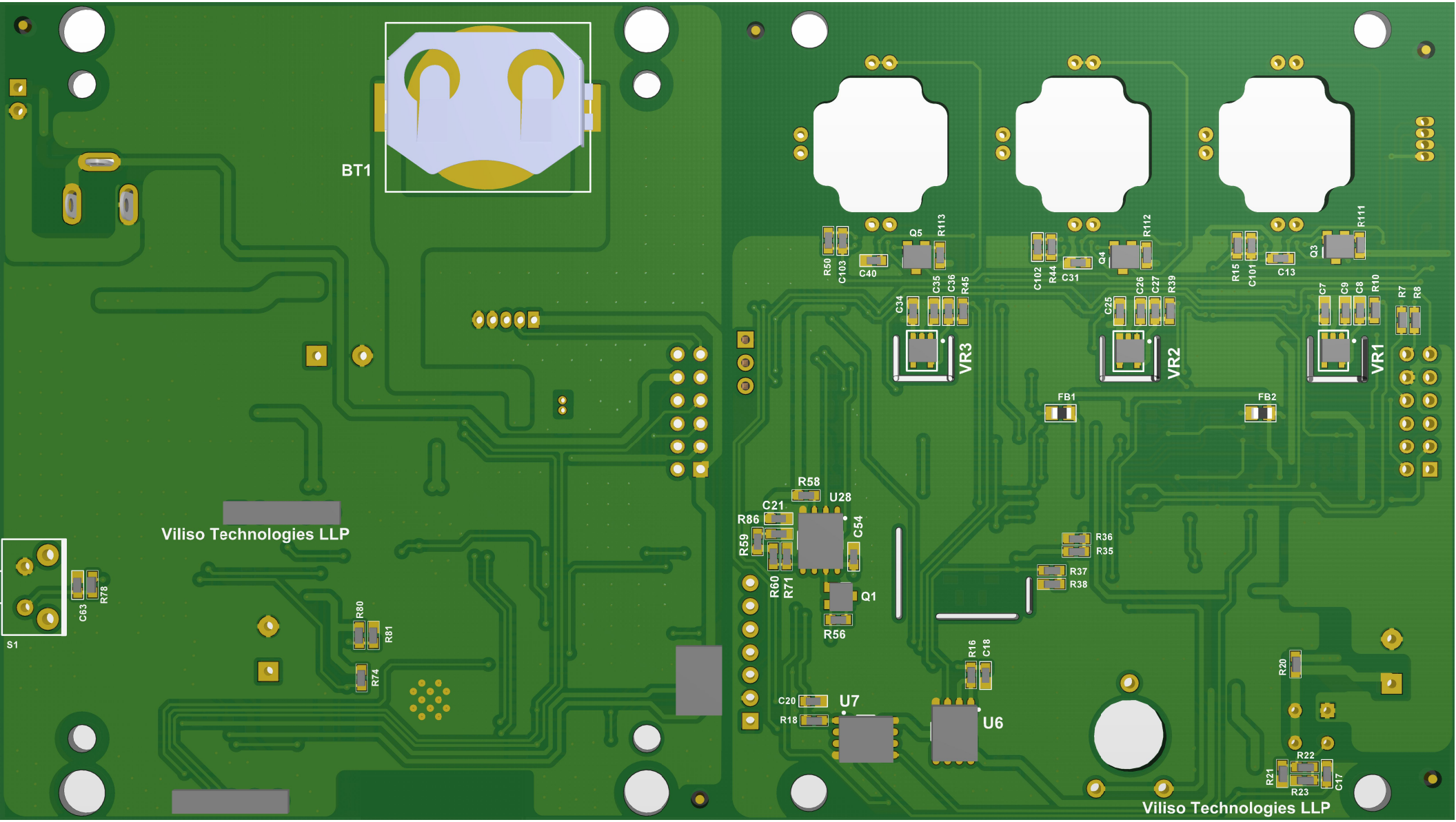
BT1
Viliso Technologies LLP
S1
C63
R78
R80
R81
R74
R50
C103
C40
Q5
R113
C35
C36
R45
C34
VR3
C102
R44
C31
Q4
R112
C26
C27
R39
C25
VR2
R15
C101
C13
Q3
R111
C7
C9
C8
R10
R7
R8
VR1
FB1
FB2
R58
U28
C21
R86
C54
R59
R60
R71
Q1
R56
R36
R35
R37
R38
R16
C18
C20
R18
U7
U6
R20
R22
R21
R23
C17
Viliso Technologies LLP