Module reset signal /TTL level@3.3V,low reset.

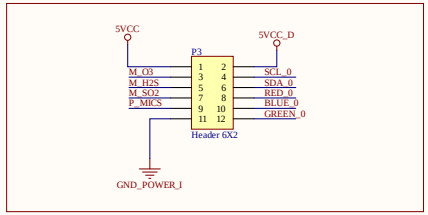

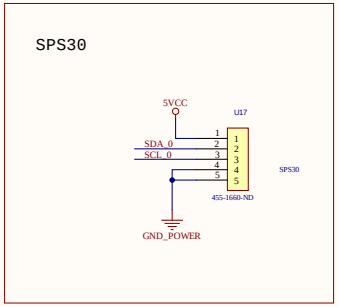

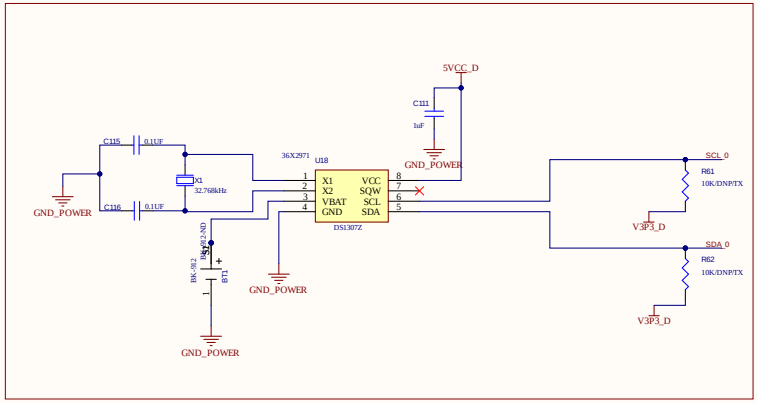

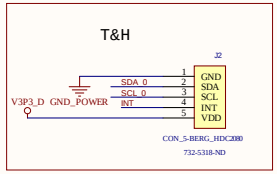

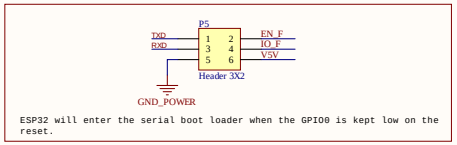

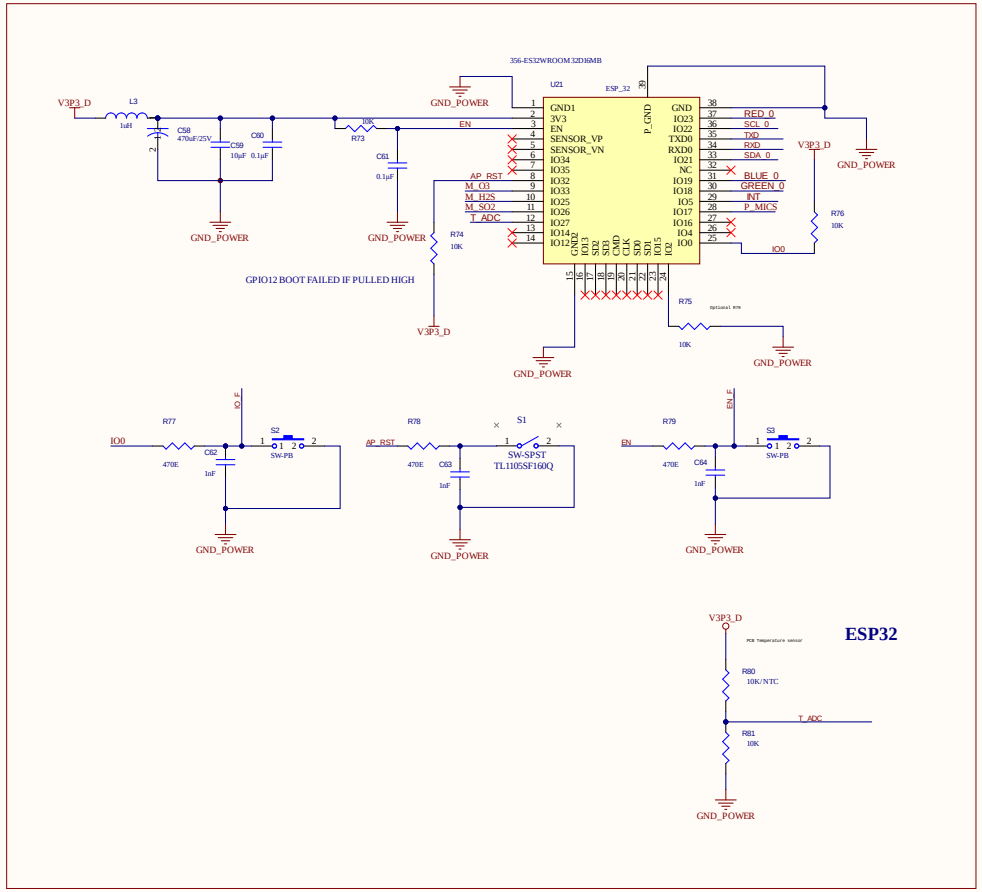

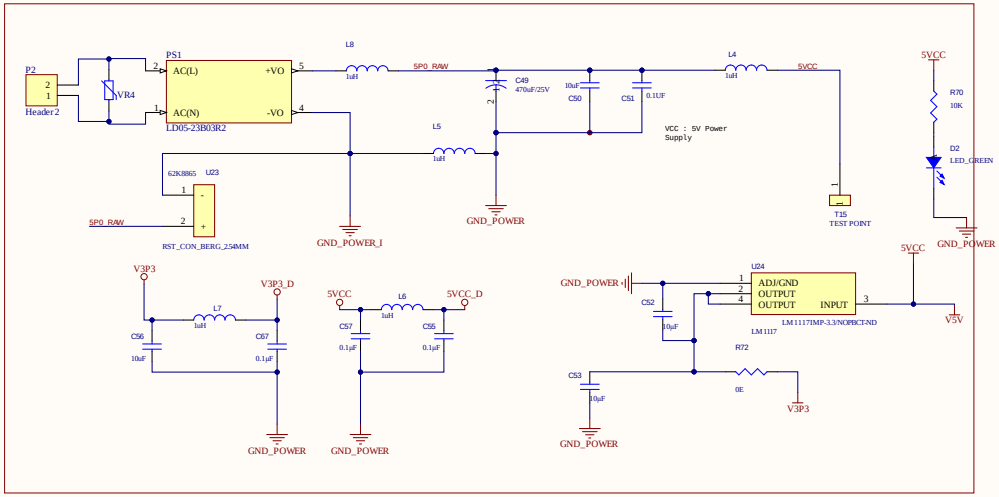

Title		
Size C	Number	Revision
Date: 1-04-2024	Sheet of	
File: D:\Vayuvedh project\MGD.SCH1.SchDoc	Drawn By:	

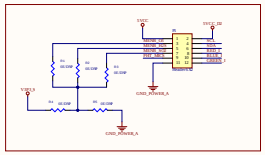

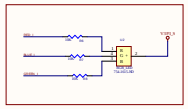

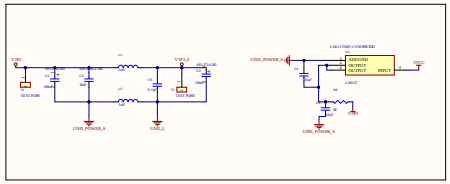

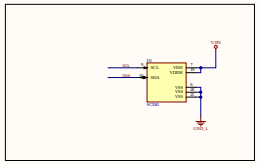

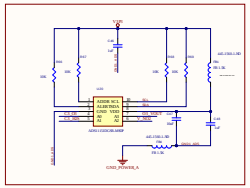

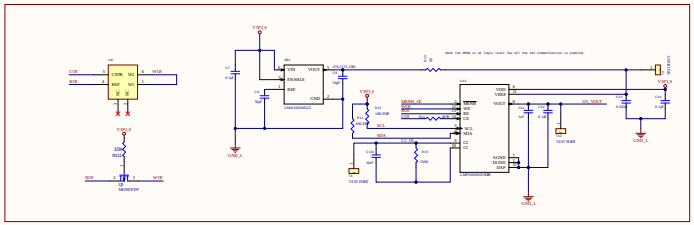

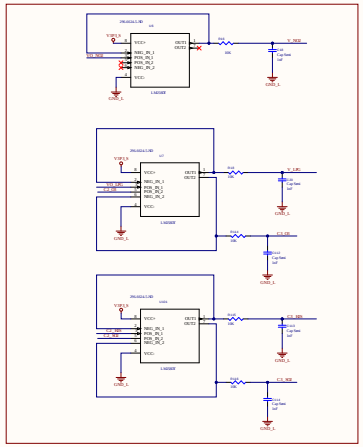

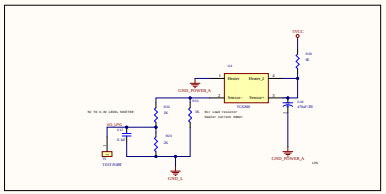

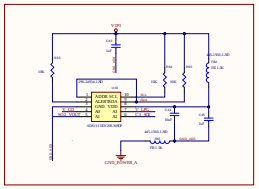

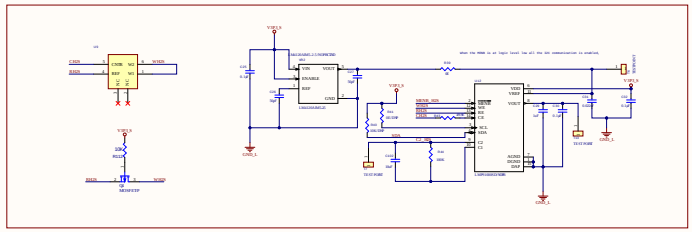

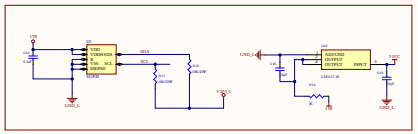

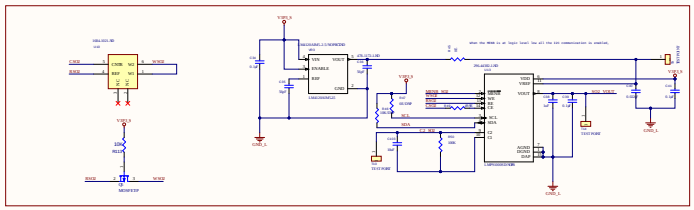

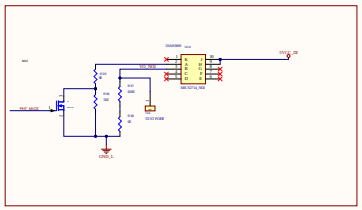

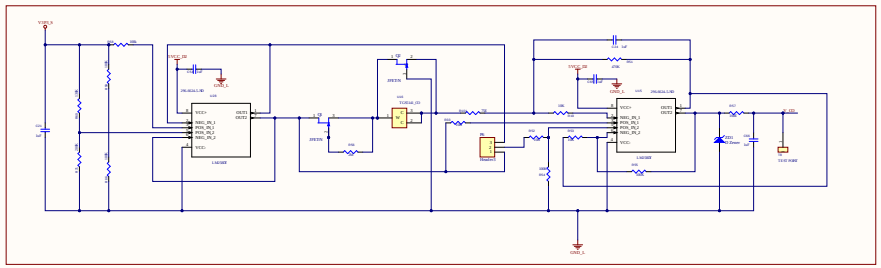

Title *			
Size: B	Number*	Revision*	
Date: 12-12-2021	Time: 17:19:06	Sheet * of *	
File: C:\Users\admin\Desktop\Main.SchDoc			

Altium

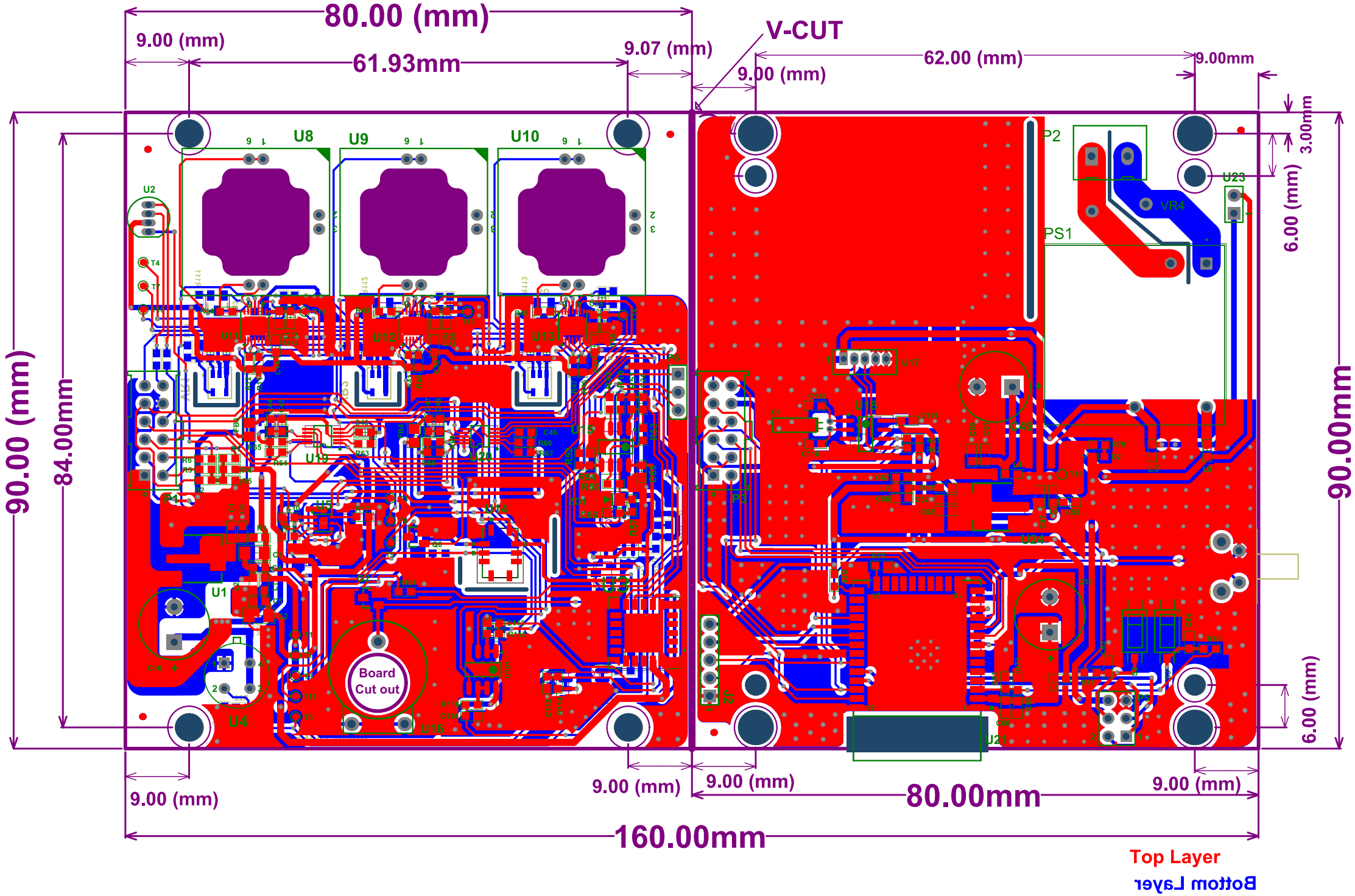

Vilisio Technologies LLP