Project Portfolio

A selection of notable projects. Prepared for StarFish Medical
Harrison Fletcher
1/22/2020

CareChanger

Background

Urinary incontinence affects approximately 423 million individuals worldwide. Within this population, physical or cognitive impairments may inhibit individuals from communicating urinary void events to caretakers. This lack of efficient communication frequently leads to skin infections and tissue damage resulting in unnecessary health care costs and decreased quality of life. To combat these issues, Jim McDermott conceptualized a device capable of detecting void events and alerting caretakers. In summer 2019, Jim reached out to partner with the UVic Biomedical Engineering Design (BMED) Club for the design of an assistive platform he called CareChanger.

Objective

The objective of this project is to develop a small and mobile urinary void event detection and alert system for wheelchair bound users which provides the following functionality:

- Detection of urinary void events
- Alert caretakers of events and display live client data

Design Overview

The proposed design consists of four modules:

1. Wheelchair cushion sensor
2. Primary battery-powered embedded device
3. Backend database
4. Mobile web application

Hardware Design

The CareChanger device is a battery-powered embedded system based on the NINA-W102 Wi-Fi module. It has been designed for quick and accurate detection of urinary void events. A wearable device design ethos was adopted when approaching the functionality of this device. That is, the device is simple, small and promotes caretaker efficiency. The hardware provides the following functionality:

1. LED Indication for charge status, Wi-Fi connection status, and event detection
2. LiPo Battery charging (Skyworks AAT3693IDH-AA)
3. Tactile switches for basic user inputs such as turning the device on/off, configuring the Wi-Fi connection and displaying the remaining battery charge
4. Micro USB port for convenient device debugging, programming and charging
5. A temperature and humidity sensor probe conveying all the data required to sense a urinary void event

Figure 1: CareChanger PCB

Figure 2: CareChanger Device

A Silicon labs Si7021 low power temperature and humidity sensor is embedded in a small 3D-printed probe (Figure 3). Embedding this probe in the seat cushion of the wheelchair provides an acceptable measure of local temperature and humidity. Temperature and humidity is periodically sampled and processed by the embedded system with a dynamic algorithm which reliably identifies urinary void events. Data and event status are then communicated to a remote database via Wi-Fi. Databased samples are viewable via interactive plots. After the occurrence of a void event, the device typically requires approximately 5 seconds to identify the user as “dirty”.

Figure 3: Temperature and Humidity Probe

Results

A prototype device was completed and delivered to Jim in Fall 2019. Since then it has been successfully sensing void events in the wheelchair of Jim's Daughter, Mariel. The success of this prototype has proven the utility of void event detection in modern care facilities.

Awards, Recognition and Articles

- Second place in the technological barriers category at the 2019 National IDeA challenge
- Winner of the 2019 UVic Biomedical Engineering and Health Technology Showcase (BEEP) poster challenge

For more on CareChanger and Jim's story please check out the following articles:

1. "Dad's invention for disabled daughter gets recognition at national contest", Times Colonist
2. "Improving Lives with the CareChanger Project", My Life UVic

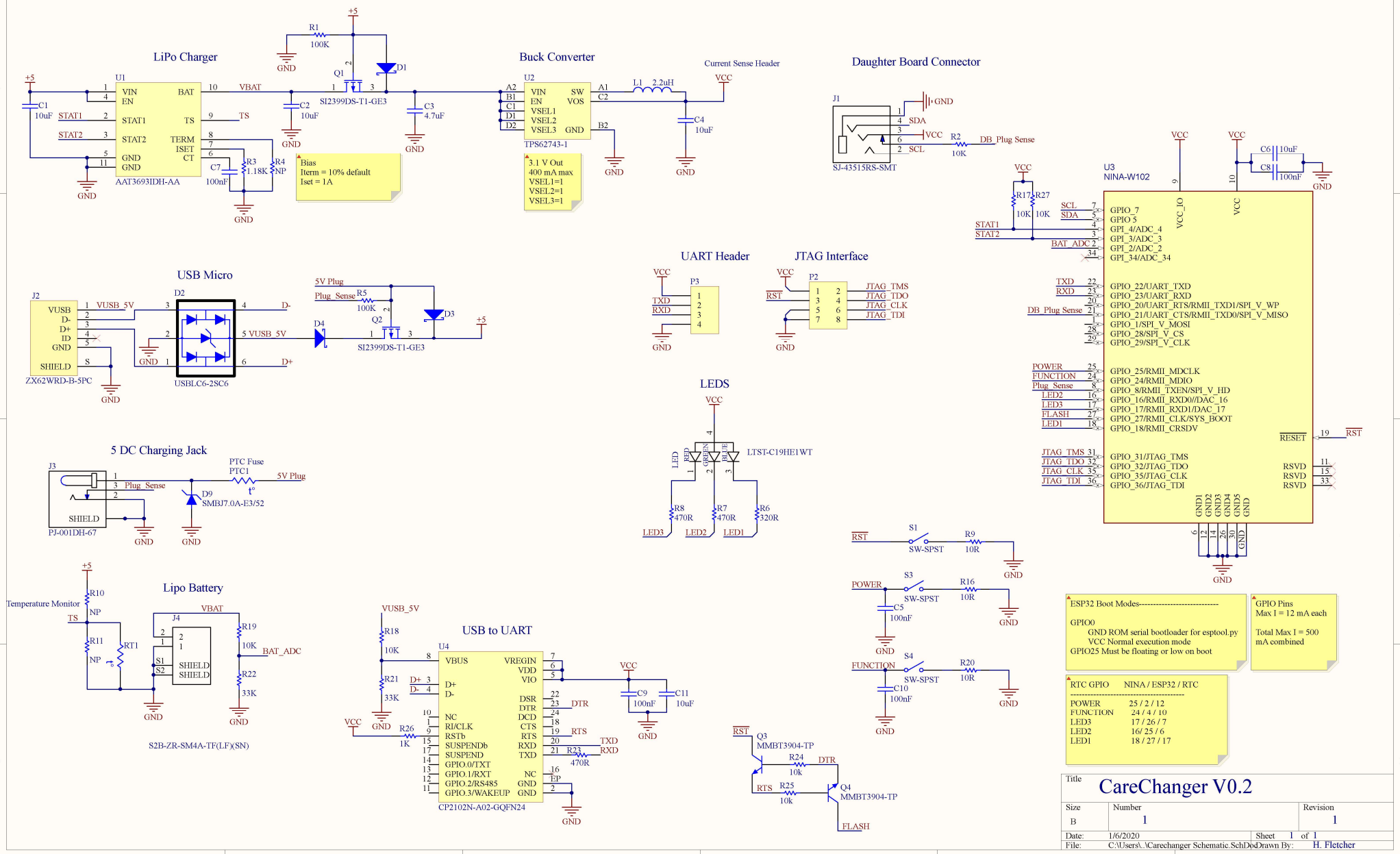
LiPo Charger
U1
AAT3693IDH-AA
VIN
EN
STAT1
STAT2
GND
GND
BAT
TS
TERM
ISET
CT
VBAT
TS
C1 10uF
C2 10uF
C3 4.7uF
C7 100nF
R3 1.18K
R4 NP
R1 100K
Q1
SI2399DS-T1-GE3
D1
Bias
Iterm = 10% default
Iset = 1A
Buck Converter
U2
TPS62743-1
VIN
EN
VSEL1
VSEL2
VSEL3
GND
SW
VOS
L1 2.2uH
C4 10uF
3.1 V Out
400 mA max
VSEL1=1
VSEL2=1
VSEL3=1
Current Sense Header
VCC
Daughter Board Connector
J1
SJ-43515RS-SMT
SDA
SCL
VCC
R2 10K
DB_Plug Sense
U3
NINA-W102
VCC_IO
VCC
C6 10uF
C8 100nF
R17 10K
R27 10K
SCL
SDA
STAT1
STAT2
BAT_ADC
GPIO_7
GPIO 5
GPI_4/ADC_4
GPI_3/ADC_3
GPI_2/ADC_2
GPI_34/ADC_34
TXD
RXD
GPIO_22/UART_TXD
GPIO_23/UART_RXD
GPIO_20/UART_RTS/RMII_TXD1/SPI_V_WP
GPIO_21/UART_CTS/RMII_TXD0/SPI_V_MISO
GPIO_1/SPI_V_MOSI
GPIO_28/SPI_V_CS
GPIO_29/SPI_V_CLK
POWER
FUNCTION
Plug_Sense
LED2
LED3
FLASH
LED1
GPIO_25/RMII_MDCLK
GPIO_24/RMII_MDIO
GPIO_8/RMII_TXEN/SPI_V_HD
GPIO_16/RMII_RXD0//DAC_16
GPIO_17/RMII_RXD1/DAC_17
GPIO_27/RMII_CLK/SYS_BOOT
GPIO_18/RMII_CRSDV
RESET
RST
JTAG_TMS
JTAG_TDO
JTAG_CLK
JTAG_TDI
GPIO_31/JTAG_TMS
GPIO_32/JTAG_TDO
GPIO_35/JTAG_CLK
GPIO_36/JTAG_TDI
RSVD
GND1
GND2
GND3
GND4
GND5
GND
USB Micro
J2
ZX62WRD-B-5PC
VUSB
D-
D+
ID
GND
SHIELD
VUSB_5V
D2
USBLC6-2SC6
5 VUSB_5V
D4
5V Plug
Plug_Sense
R5 100K
Q2
SI2399DS-T1-GE3
D3
UART Header
P3
TXD
RXD
JTAG Interface
P2
RST
JTAG_TMS
JTAG_TDO
JTAG_CLK
JTAG_TDI
LEDS
LTST-C19HE1WT
LED
RED
GREEN
BLUE
R8 470R
R7 470R
R6 320R
LED3
LED2
LED1
5 DC Charging Jack
J3
PJ-001DH-67
Plug_Sense
SHIELD
PTC Fuse
PTC1
5V Plug
D9
SMBJ7.0A-E3/52
Lipo Battery
J4
S2B-ZR-SM4A-TF(LF)(SN)
VBAT
SHIELD
SHIELD
S1
S2
R10 NP
Temperature Monitor
TS
R11 NP
RT1
R19 10K
BAT_ADC
R22 33K
USB to UART
U4
CP2102N-A02-GQFN24
VUSB_5V
R18 10K
R21 33K
D+
D-
VBUS
NC
RI/CLK
RSTb
SUSPENDb
SUSPEND
GPIO.0/TXT
GPIO.1/RXT
GPIO.2/RS485
GPIO.3/WAKEUP
VREGIN
VDD
VIO
DSR
DTR
DCD
CTS
RTS
RXD
TXD
NC
GND
GND
EP
R26 1K
R23 470R
C9 100nF
C11 10uF
S1
SW-SPST
R9 10R
S3
SW-SPST
R16 10R
C5 100nF
S4
SW-SPST
R20 10R
C10 100nF
Q3
MMBT3904-TP
Q4
MMBT3904-TP
R24 10k
R25 10k
DTR
RTS
FLASH
ESP32 Boot Modes----------
GPIO0
GND ROM serial bootloader for esptool.py
VCC Normal execution mode
GPIO25 Must be floating or low on boot
GPIO Pins
Max I = 12 mA each
Total Max I = 500 mA combined
RTC GPIO NINA / ESP32 / RTC
POWER 25 / 2 / 12
FUNCTION 24 / 4 / 10
LED3 17 / 26 / 7
LED2 16/ 25 / 6
LED1 18 / 27 / 17
Title
CareChanger V0.2
Size
B
Number
1
Revision
1
Date: 1/6/2020
Sheet 1 of 1
File: C:\Users\..\Carechanger Schematic.SchDoc
Drawn By: H. Fletcher

Board Assembly

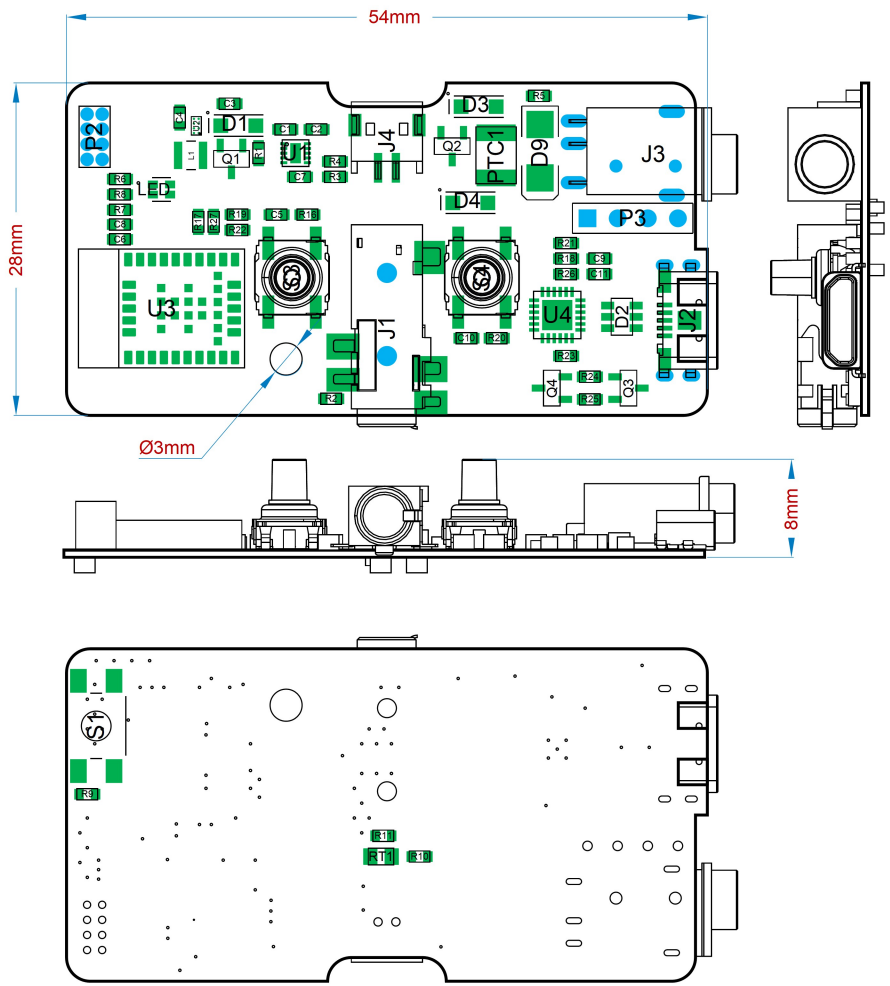

Signal Layers

Top Layer (Scale 2:1)

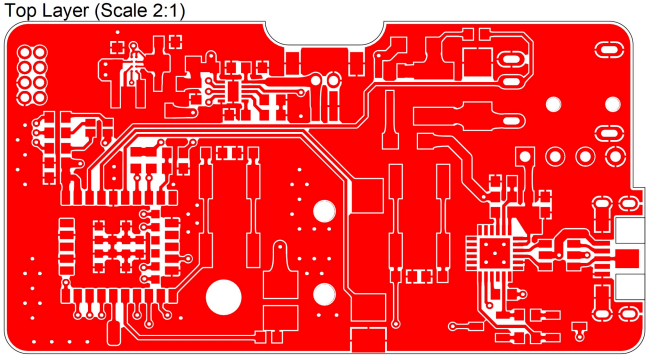

Bottom Layer (Scale 2:1)

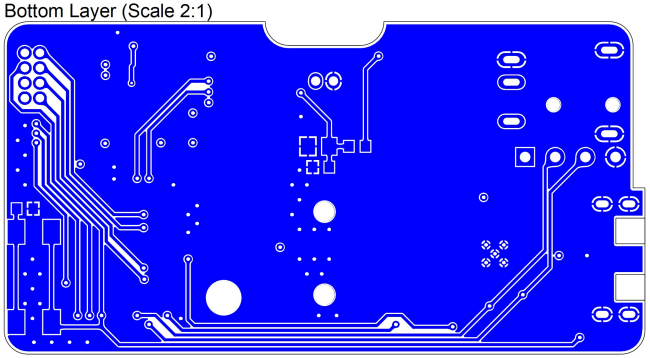

CareChanger V0.2

Harrison Fletcher 09/10/2019

Scale 2:1

AutoDACI

Background

The UVic Biomedical Design Club has teamed up with Dr. Rodney Herring in order to investigate the application of a focused ultrasound imaging technique for diagnosing breast cancer. The imaging technique makes use of focused ultrasound to generate images with increased feature definition and tissue identification. For more information, please refer to the following article and patent. To achieve the desired image quality and ease of use, Dr. Rodney Herring required an imaging system which automates the movement of an ultrasound source and probe.

Objectives and Constraints

Design an embedded control system capable of providing the following functionality:

- Isolated control of 3 individual stepper motors
- Physical isolation of power supply (via relay) in the event of fault conditions
- A handheld control terminal for human/machine interfacing
- Feedback of mechanical positioning and limits
- Isolation between 120 VAC and users

Hardware Design as a Team Leader to Date (Work in Progress)

This being the debut project for a new team of engineering students (many of them with little design experience), it was critical to break the system into well-defined subsystems. The role of team lead required me to provide and explain solutions. By doing so, teams of students could participate in the design and CAD work associated with implementing each specific solution, without getting caught up in the overwhelming process of sifting through dense websites. However, showing teams methods for sourcing a solution from distributor/manufacturer websites was also critical to building fundamental knowledge. The following design is therefore the culmination of several teams of students learning how to implement IC solutions with Altium Designer and an overall design provided by myself as team leader. The students responsible for working on each subsystem are mentioned under the subsystem titles.

Work In Progress

UART to USB
A. Saunders, O. Rettig

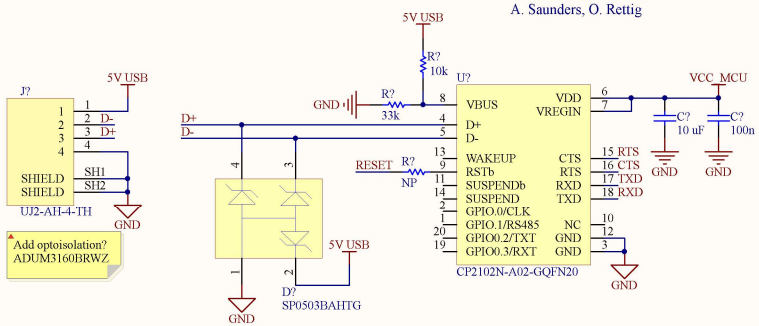

HMI Connector

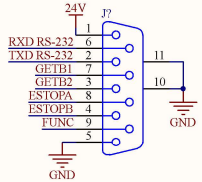

Isolators

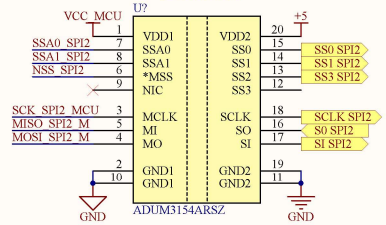

15kV ESD Protection

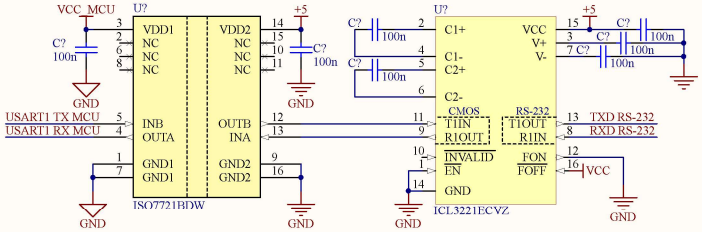

JTAG/SWD Header

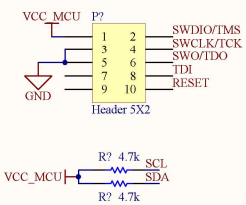

STM32F4
L. Puckett

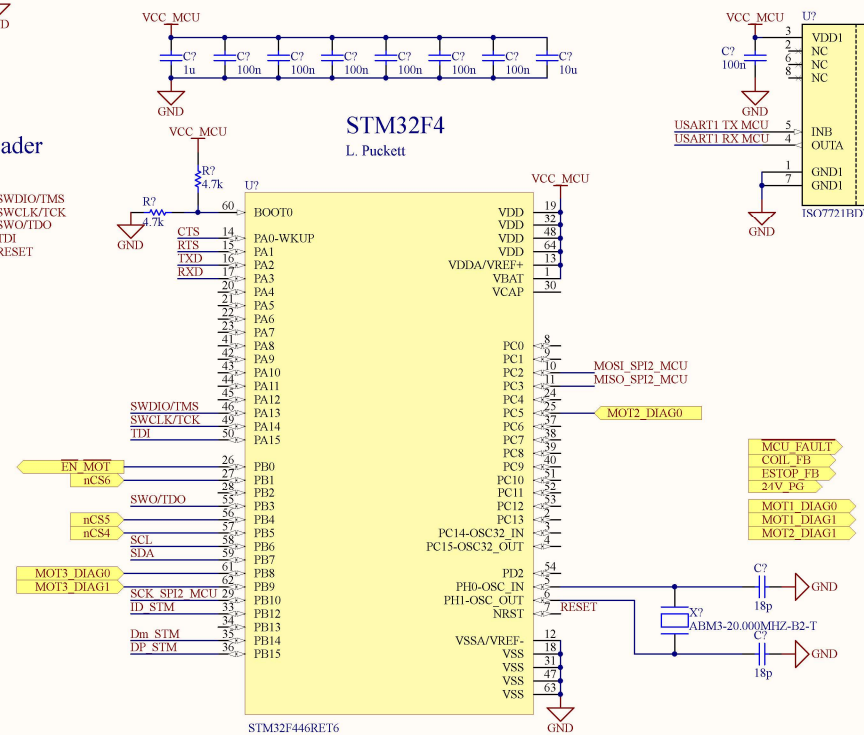

STM32F4_NUCLEO Power Notes
Power source must comply with the standard EN-60950-1: 2006+A11/2009, and must be Safety Extra Low Voltage (SELV) with limited power capability.

VIN: 7V to 12V power LD1117 5V(800mA) Voltage Reulator (E5V Rail)

5V Rails----------
U5V: USB 5V, Powers ST-Link

E5V: External 5V, Driven by VIN via LD1117 or directly from E5V pin, Powers ST-Link

Main 5V Rail: LED3, Driven by either U5V or E5V (select with J5), Power main 3.3V LDO

3.3V Rails----------
Main 3.3V LD39050PU33R LDO (500mA) driven by Main 5V rail
Coupled to VDD via JP6

Data Bus Notes----------

STM32 F4 Pin Capacitance = 5 pF

I2C
Max capacitance: 400 pF total

SPI
Max capacitance: 30 pF (page 127 of data sheet)

Title: Main MCU		
Size: Legal	Number	Revision
Date: 1/22/2020	Sheet 1 of 3	
File: C:\Users\..\Controls Shield.SchDoc	Drawn By: H. Fletcher	

Work In Progress

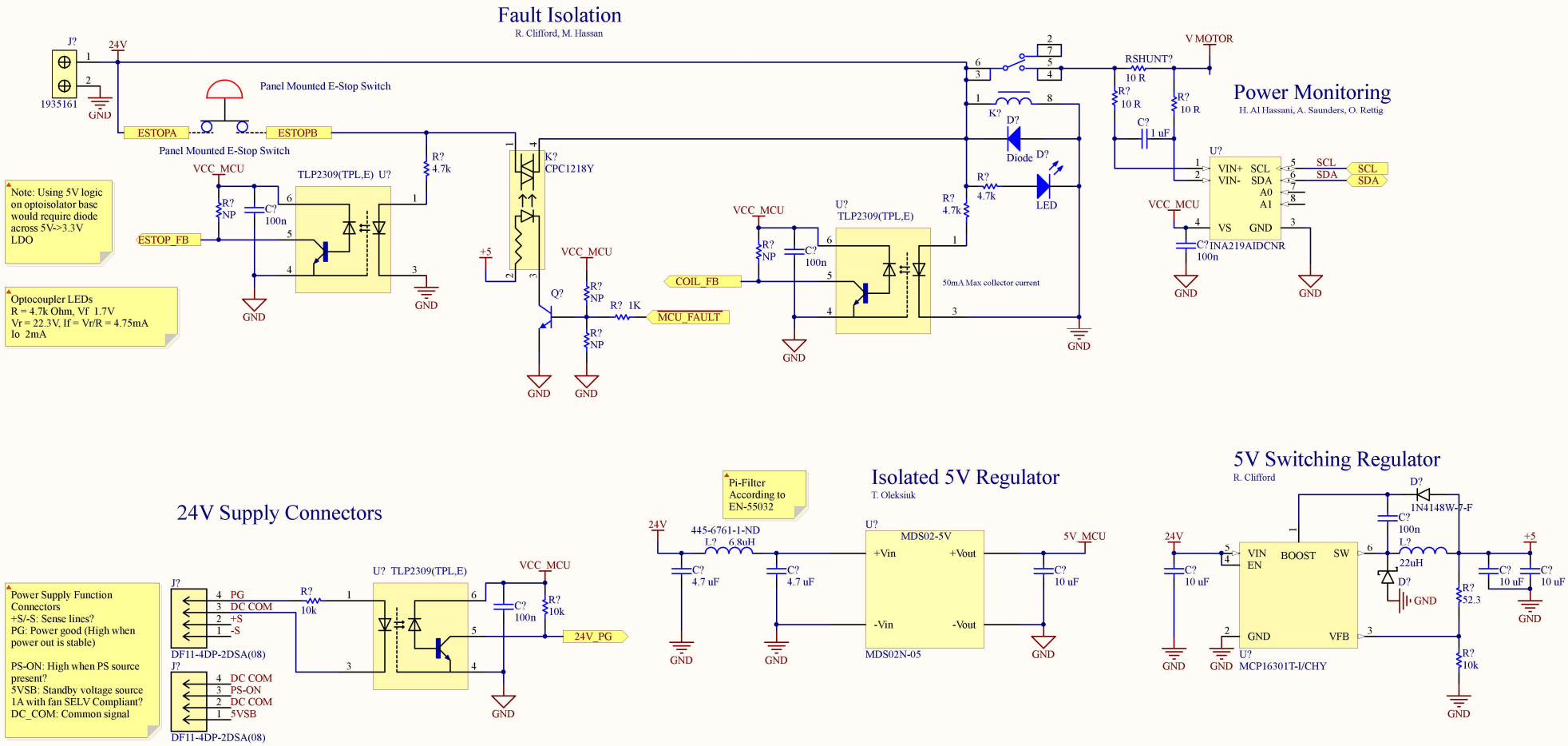

Title	Power and Fault Detection	
Size: Legal	Number	Revision: 1
Date: 1/22/2020		Sheet 2 of 3
File: C:\Users\..\Power and Fault.SchDoc		Drawn By: H. Fletcher

Work In Progress

Stepper Motor Drivers

T. Oleksiuk

TMC5160 Mode of Operation:

Both SD_MODE and SPI_MODE are pulled high

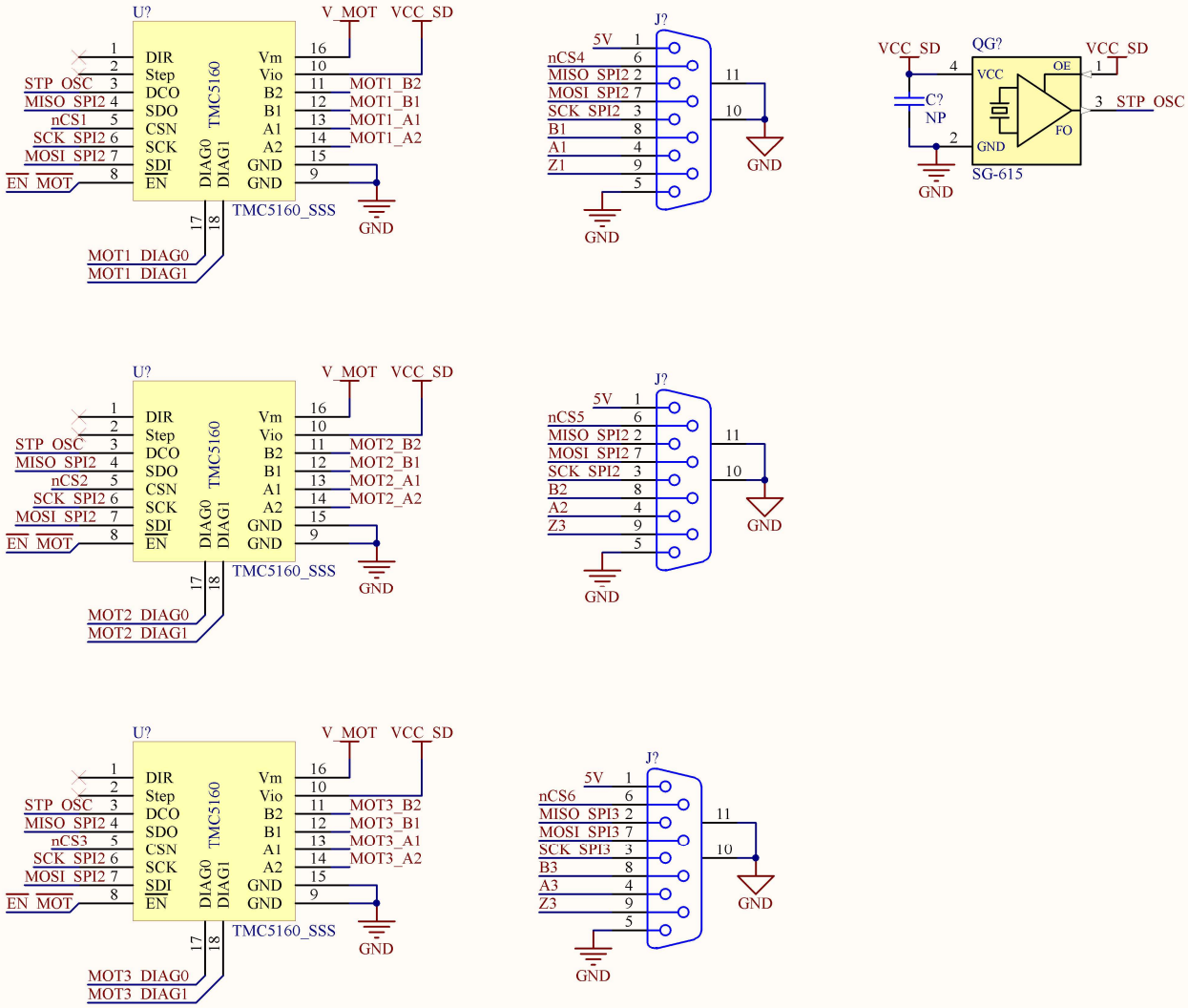

Sheet IO

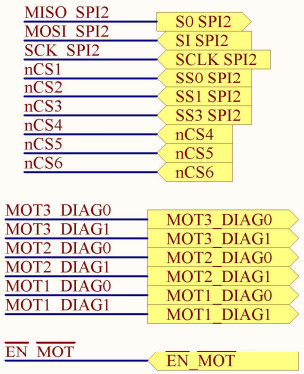

Title	Stepper Drivers and Encoders		
Size: Letter	Number		Revision: 1
Date: 1/22/2020		Sheet 1 of 3	
File: C:\Users\..\Step Drivers and Encoders.SchDoc		Drawn By: H. Fletcher	

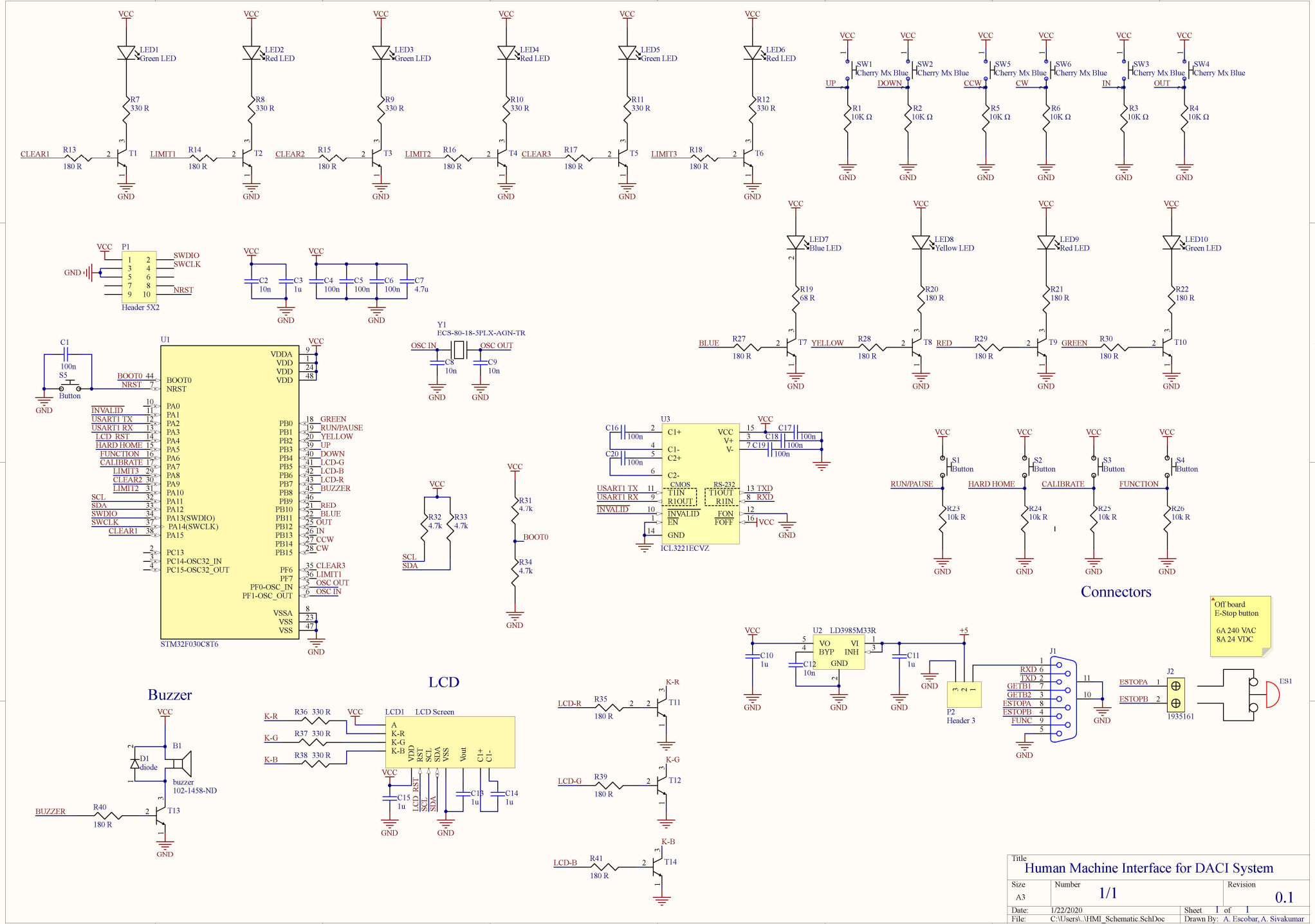
LED1 Green LED
LED2 Red LED
LED3 Green LED
LED4 Red LED
LED5 Green LED
LED6 Red LED
R7 330 R
R8 330 R
R9 330 R
R10 330 R
R11 330 R
R12 330 R
CLEAR1 R13 180 R T1
LIMIT1 R14 180 R T2
CLEAR2 R15 180 R T3
LIMIT2 R16 180 R T4
CLEAR3 R17 180 R T5
LIMIT3 R18 180 R T6
SW1 Cherry Mx Blue UP R1 10K Ω
SW2 Cherry Mx Blue DOWN R2 10K Ω
SW5 Cherry Mx Blue CCW R5 10K Ω
SW6 Cherry Mx Blue CW R6 10K Ω
SW3 Cherry Mx Blue IN R3 10K Ω
SW4 Cherry Mx Blue OUT R4 10K Ω
P1 Header 5X2
SWDIO
SWCLK
NRST
C2 10n
C3 1u
C4 100n
C5 100n
C6 100n
C7 4.7u
LED7 Blue LED
LED8 Yellow LED
LED9 Red LED
LED10 Green LED
R19 68 R
R20 180 R
R21 180 R
R22 180 R
BLUE R27 180 R T7
YELLOW R28 180 R T8
RED R29 180 R T9
GREEN R30 180 R T10
C1 100n
S5 Button
U1 STM32F030C8T6
BOOT0 44
NRST 7
INVALID 10
USART1 TX 12
USART1 RX 13
LCD_RST 14
HARD HOME 15
FUNCTION 16
CALIBRATE 17
LIMIT3 29
CLEAR2 30
LIMIT2 31
SCL 32
SDA 33
SWDIO 34
SWCLK 37
CLEAR1 38
PA0
PA1
PA2
PA3
PA4
PA5
PA6
PA7
PA8
PA9
PA10
PA11
PA12
PA13(SWDIO)
PA14(SWCLK)
PA15
PC13
PC14-OSC32_IN
PC15-OSC32_OUT
VDDA
VDD
VDD
VDD
PB0 18 GREEN
PB1 19 RUN/PAUSE
PB2 20 YELLOW
PB3 39 UP
PB4 40 DOWN
PB5 41 LCD-G
PB6 42 LCD-B
PB7 43 LCD-R
PB8 45 BUZZER
PB9 46
PB10 21 RED
PB11 22 BLUE
PB12 25 OUT
PB13 26 IN
PB14 27 CCW
PB15 28 CW
PF6 35 CLEAR3
PF7 36 LIMIT1
PF0-OSC_IN 5 OSC OUT
PF1-OSC_OUT 6 OSC IN
VSSA 8
VSS 23
VSS 47
Y1 ECS-80-18-5PLX-AGN-TR
OSC IN
OSC OUT
C8 10n
C9 10n
R32 4.7k
R33 4.7k
SCL
SDA
R31 4.7k
R34 4.7k
BOOT0
U3 ICL3221ECVZ
C16 100n
C20 100n
C17 100n
C18 100n
C19 100n
C1+
C1-
C2+
C2-
VCC
V+
V-
CMOS
T1IN
R1OUT
INVALID
EN
GND
RS-232
T1OUT
R1IN
FON
FOFF
USART1 TX
USART1 RX
INVALID
13 TXD
8 RXD
S1 Button RUN/PAUSE R23 10k R
S2 Button HARD HOME R24 10k R
S3 Button CALIBRATE R25 10k R
S4 Button FUNCTION R26 10k R
Connectors
Off board E-Stop button
6A 240 VAC
8A 24 VDC
U2 LD3985M33R
VO
BYP
VI
INH
GND
C10 1u
C12 10n
C11 1u
+5
P2 Header 3
J1
RXD 6
TXD 2
GETB1 7
GETB2 3
ESTOPA 8
ESTOPB 4
FUNC 9
5
11
10
J2 1935161
ESTOPA 1
ESTOPB 2
ES1
Buzzer
B1 buzzer 102-1458-ND
D1 diode
BUZZER R40 180 R T13
LCD
K-R R36 330 R
K-G R37 330 R
K-B R38 330 R
LCD1 LCD Screen
A
K-R
K-G
K-B
VDD
RST
SCL
SDA
VSS
Vout
C1+
C1-
C15 1u
C13 1u
C14 1u
LCD-R R35 180 R T11
LCD-G R39 180 R T12
LCD-B R41 180 R T14
Title
Human Machine Interface for DACI System
Size A3
Number 1/1
Revision 0.1
Date: 1/22/2020
Sheet 1 of 1
File: C:\Users\..\HMI_Schematic.SchDoc
Drawn By: A. Escobar, A. Sivakumar

Achilles Biofeedback Wearable

Background

Currently there are few affordable tools to aid practitioners in the diagnosis of conditions affecting the Achilles tendon. Providing a real-time quantifiable diagnosis within a physician-patient consultation is generally achieved with expensive gait monitoring systems which track the patient's range of motion. Additionally, practitioners often observe a lack of adherence to the prescribed exercise regime by the patient. It is believed that this is partially due to an absence of motivational results which illustrate the healing progress to the patient. Both issues are being challenged by a wearable biofeedback device designed and developed by the Dr. Giles Lab at UVic.

Objective

Provide a wearable, battery-powered device which provides the following functionality:

1. Measurement of key gait parameters such as relative pressure distribution across the user's plantar region and angular displacements for ankle flexion/extension/rotation.
2. Tracking at-home patient exercise adherence by allowing them to plan, count and display customized rehabilitation exercises while providing pertinent statistics regarding the recovery process to the patient and clinicians.
3. Allowing clinicians to set and send live warnings to patients regarding dangerous and prescribed movement limitations to prevent further injury.

Design Overview

The proposed solution consists of a hardware platform and android application. The wearable device includes a small enclosure, which is strapped around the user's calf and an insole which is inserted in the user's shoe. The primary embedded PCB, Bluetooth hardware and battery are enclosed in the calf module. In the most recent version (not pictured) a thin ribbon cable connects the calf module and insole.

Figure 4: Wearable Device

Pressure Sensor Theory of Operation

After reviewing the literature, a prototype resistive sensor matrix has been designed for sampling the pressure distribution across the user's plantar region. Velostat, an ESD safe packing material manufactured by 3M, acts as the pressure sensing element. Since Velostat has a very high resistance between points on its surface (Rx and Ry in Figure 5), strips of conductive copper tape fixed to the same layer of Velostat will pass negligible currents between each other (Figure 6).

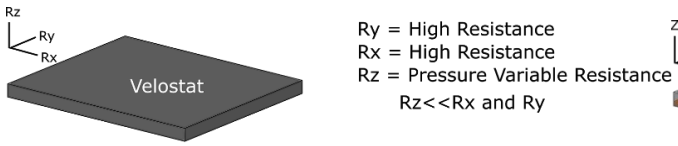

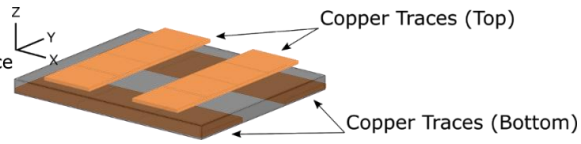

Figure 5: Directional Resistances of Velostat

Figure 6: Velostat with Copper Traces

However, copper traces on opposite sides of the Velostat sheet will exchange a current dependent on the Velostat's pressure-variant vertical resistance (Rz in Figure 5) which is situated between the two conductors (Figure 7).

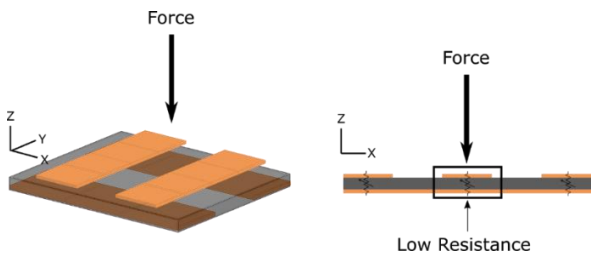

Figure 7: Pressure Dependent Resistances Between Copper Traces

The relative pressure, or vertical Velostat resistance (Rz), can be determined by simply acquiring the output voltage of a resistive divider. Therefore, any area of Velostat which is between two adjacent copper traces can be considered an individual sensing element. By applying a positive voltage to one copper trace on the top layer, the relative pressure on each sensor can be acquired by simply measuring the voltages on each overlapping trace on the bottom layer. Prototyping the pressure sensing insole required laser cutting a simple stencil system which provided a convenient means for accurately placing copper strips on the Velostat material (Figure 8). In the future, a flexible copper-polyamide film will be masked and etched to provide more professional results and a higher density of sensor elements.

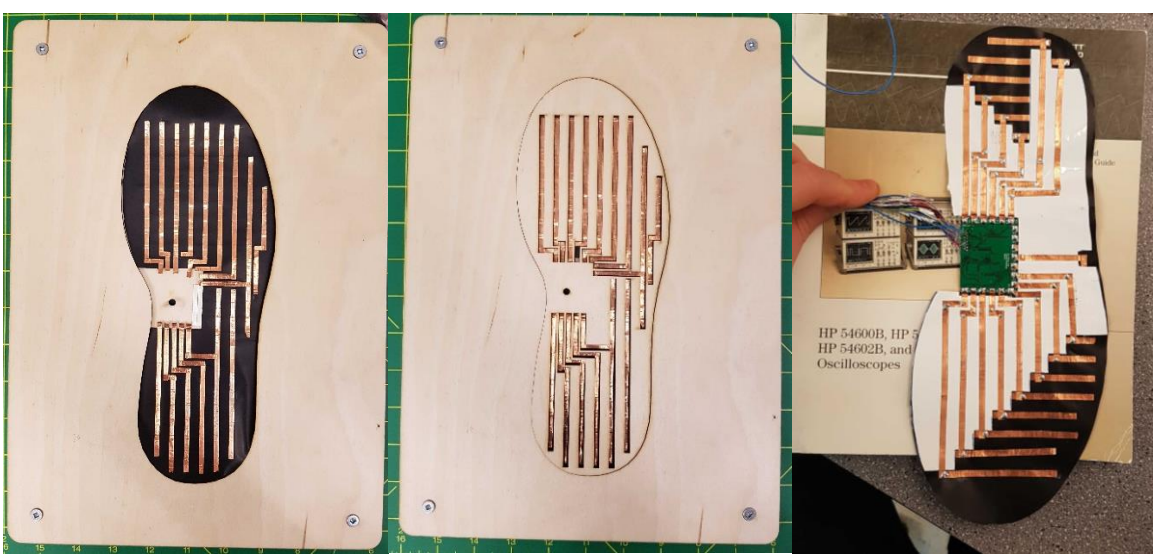

Figure 8: Laser Cut Prototyping System and Assembled Insole Prototype

Inertial Measurement Units (IMUs)

Inertial measurement units (IMUs) have been selected to measure the angular displacements of ankle flexion, inversion/eversion and abduction/adduction. To achieve this, two IMUs are required: one mounted on the user's calf and one embedded in the insole (Figure 9). Each IMU combines a MEMs accelerometer and gyroscope to measure linear and angular velocity along three axes. This data is buffered inside the IMU and communicated to a micro controller unit (MCU) via a digital serial interface such as I2C or SPI.

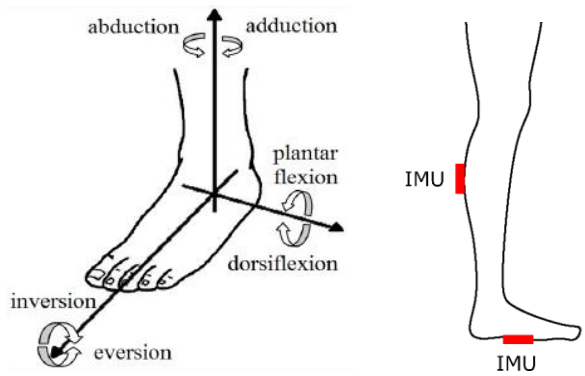

Figure 9: Ankle Movements and IMU Locations

Printed Circuit Board Design

Two circuit boards have been designed to complete this wearable platform. The first is enclosed inside the insole and provides all electronics required to read out the pressure sensor array. A STM32L0 microcontroller samples the entire range of resistive sensors and stores the data in a buffer. An ST LSM6DSM inertial measurement (IMU) unit communicates linear and angular acceleration to the STM32L0 over I2C. The STM32L0 acts as a slave device on a SPI bus and streams the measured pressure distribution and IMU data to the main processor housed in the calf module. The second PCB hosts the main Bluetooth module, another ST LSM6DSM IMU and a variety of electronics which provide:

- Lipo single cell battery charging
- USB 2.0 data transfer
- Control of a small haptic feedback motor
- Connector to insole board
- LEDs for battery and connection status

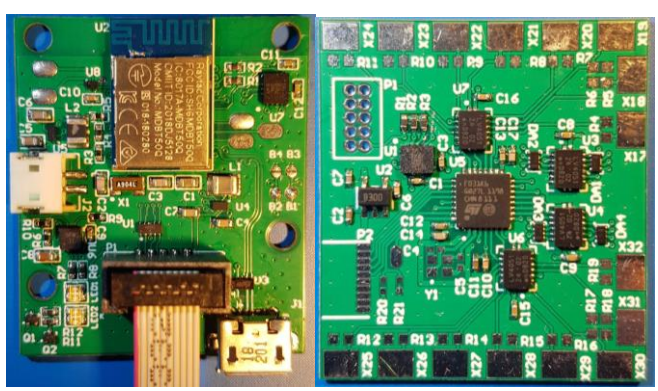

Figure 10: Main Board (Left) and Insole Board (Right)

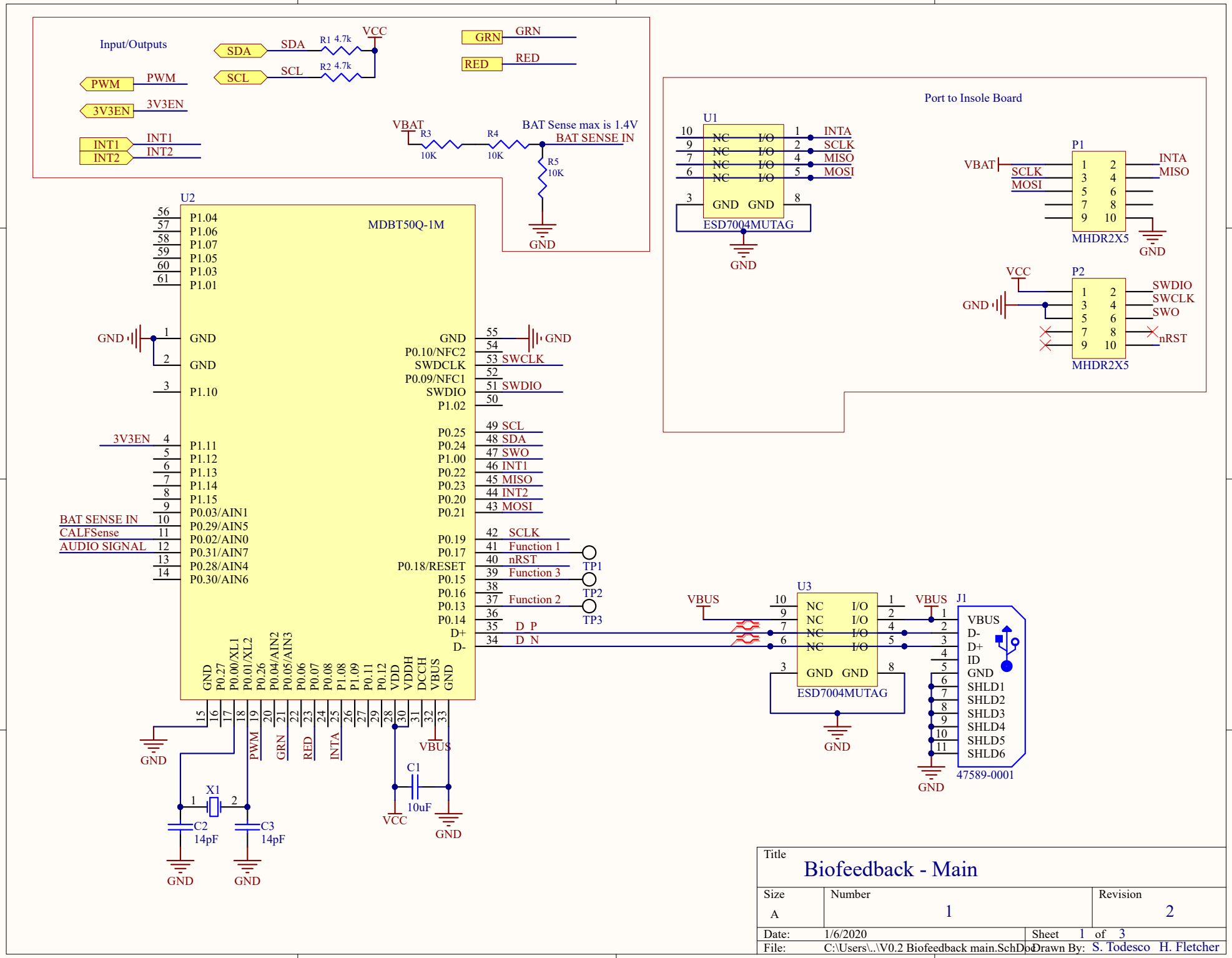
Input/Outputs
SDA
SCL
PWM
3V3EN
INT1
INT2
GRN
RED
R1 4.7k
R2 4.7k
VCC
VBAT
R3 10K
R4 10K
R5 10K
BAT Sense max is 1.4V
BAT SENSE IN
GND
Port to Insole Board
U1
ESD7004MUTAG
P1
MHDR2X5
P2
SWDIO
SWCLK
SWO
nRST
U2
MDBT50Q-1M
BAT SENSE IN
CALFSense
AUDIO SIGNAL
Function 1
Function 2
Function 3
TP1
TP2
TP3
D_P
D_N
U3
J1
47589-0001
X1
C1
10uF
C2 14pF
C3 14pF
Title
Biofeedback - Main
Size
A
Number
1
Revision
2
Date: 1/6/2020
Sheet 1 of 3
File: C:\Users\..\V0.2 Biofeedback main.SchDoc
Drawn By: S. Todesco H. Fletcher

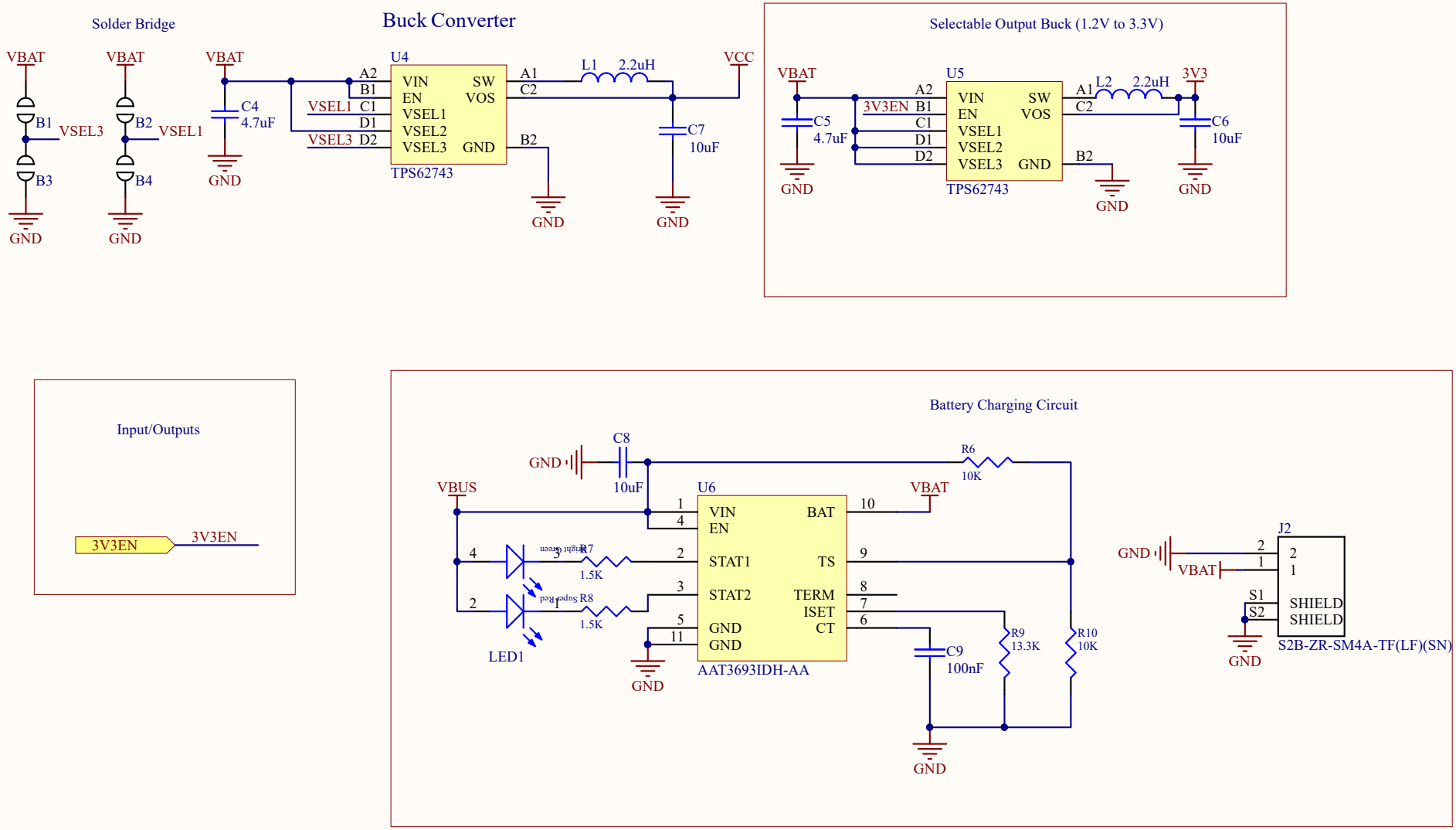

Title		
Power - Biofeedback		
Size: A	Number: 1	Revision: 2
Date: 1/6/2020	Sheet 2 of 3	
File: C:\Users\..\V0.2 Power.SchDoc	Drawn By: S. Todesco H. Fletcher	

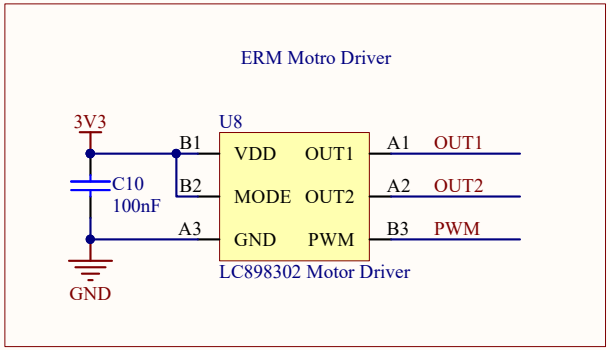

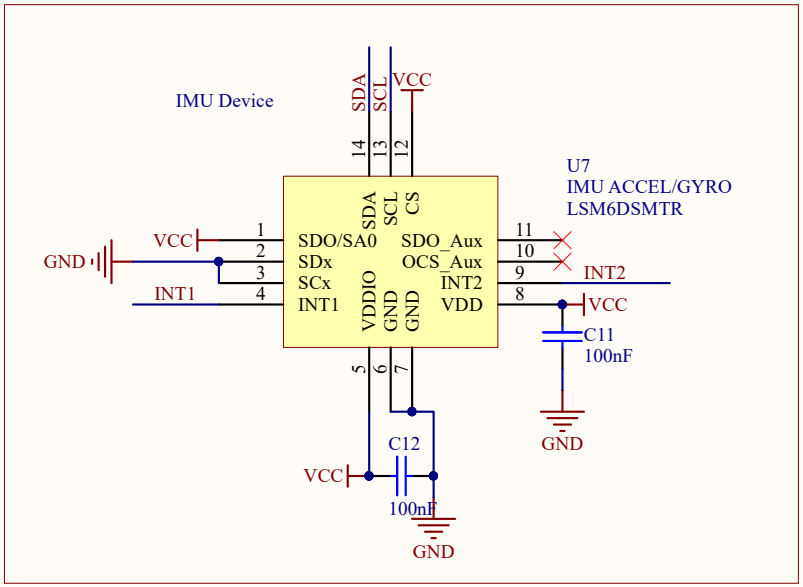

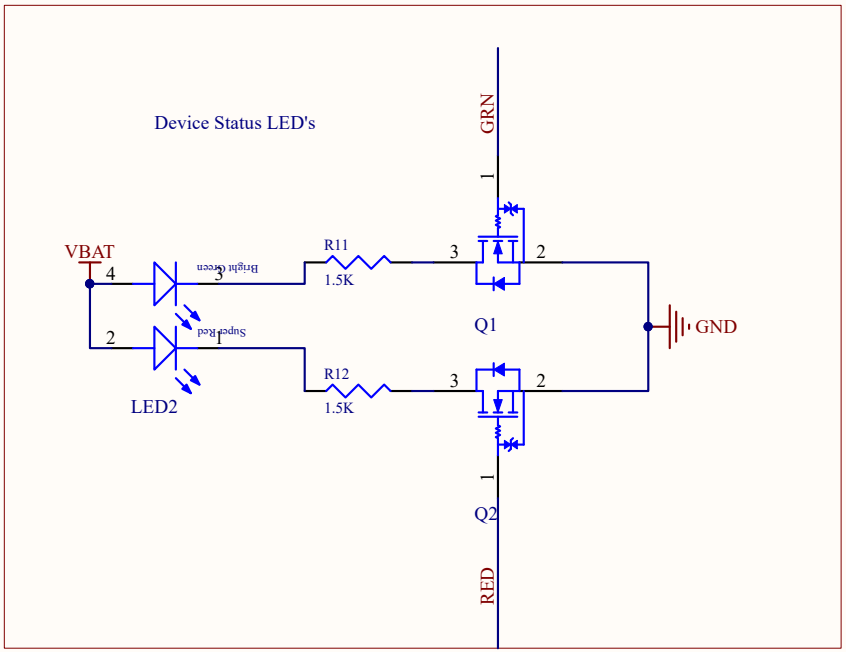

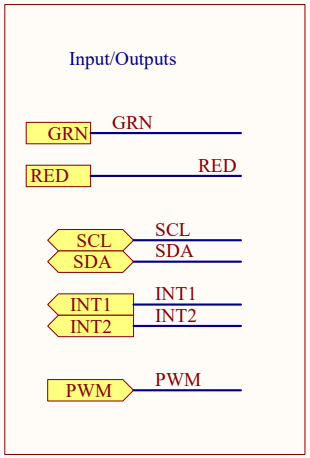

Title		
Sensors - Biofeedback		
Size: A	Number: 1	Revision: 2
Date: 1/6/2020	Sheet 3 of 3	
File: C:\Users\..\V0.2 Sensors.SchDoc	Drawn By: S. Todesco H. Fletcher	

Board Assembly

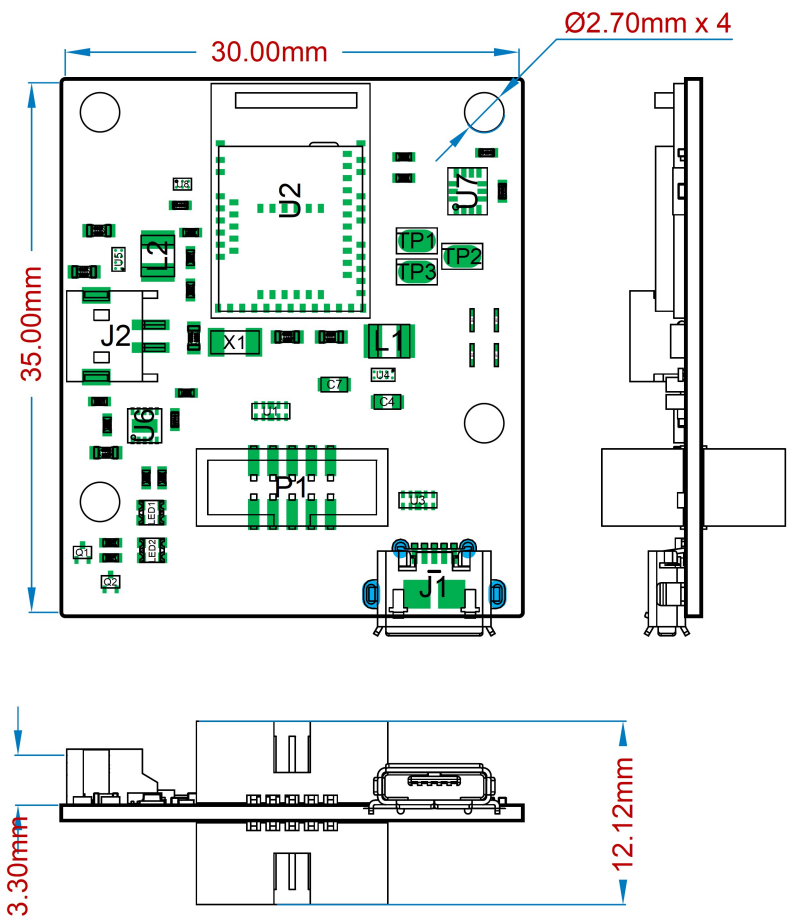

Signal Layers

Top Layer (Scale 2:1)

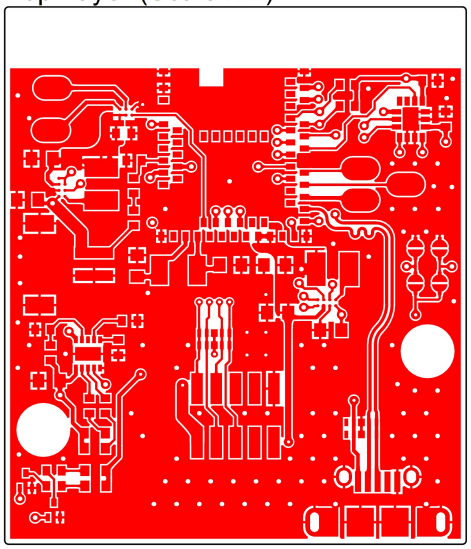

Layer 2 (Scale 2:1)

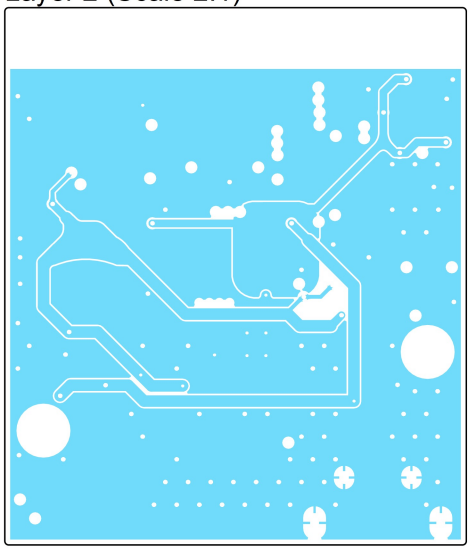

Bottom Layer (Scale 2:1)

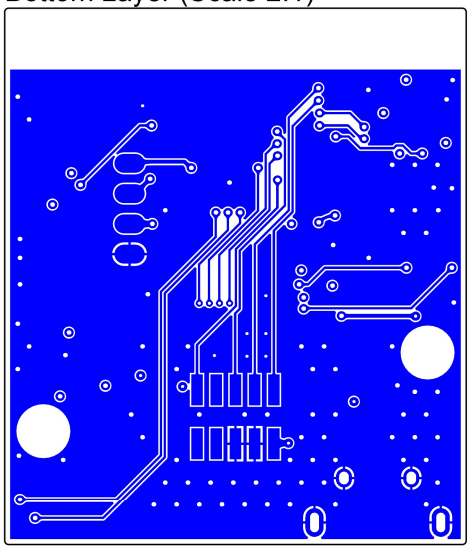

Biofeedback V0.2

Silvano Todesco 26/07/2019 (V0.1)
Harrison Fletcher 09/10/2019 (V0.2)

Scale 2:1

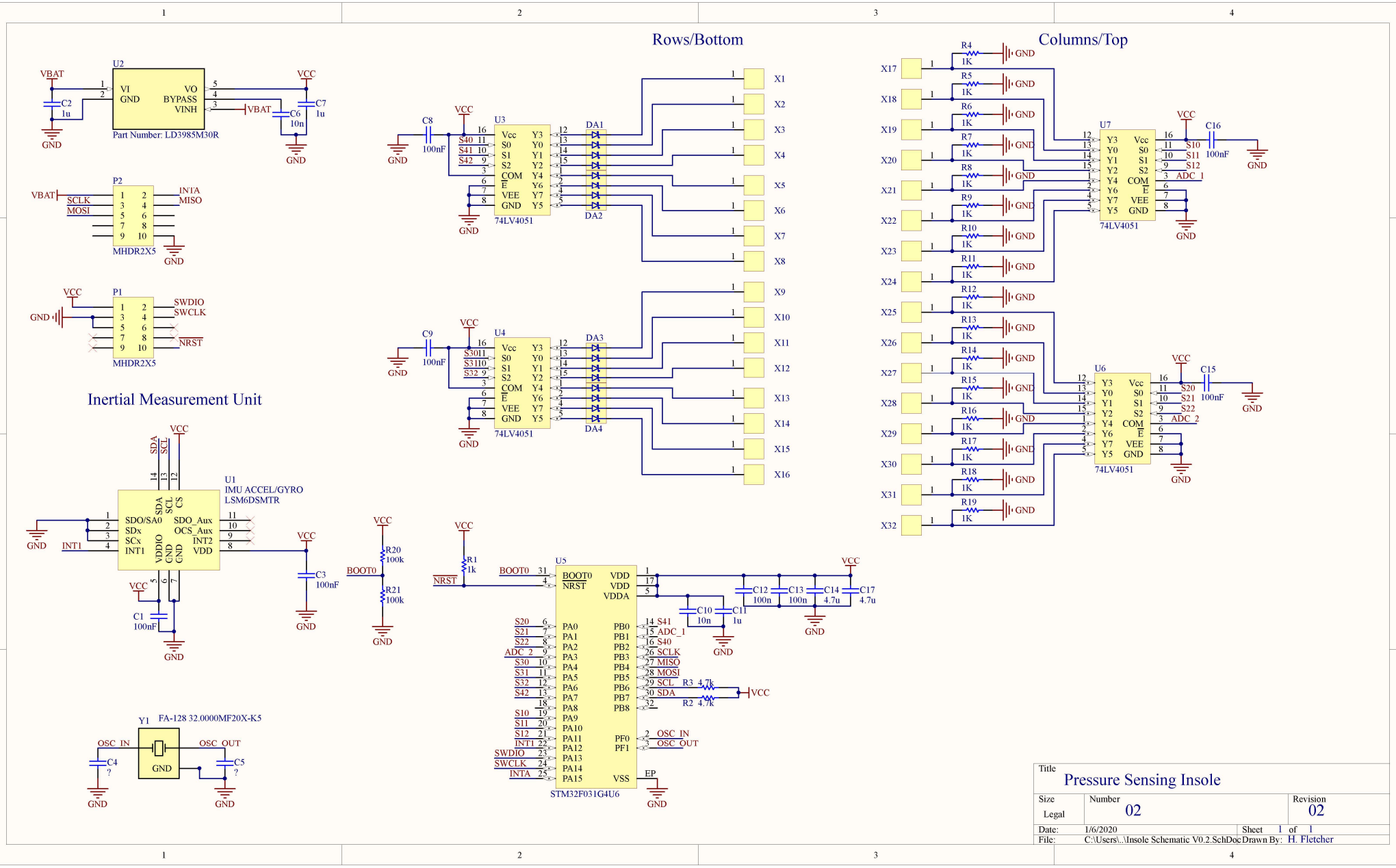

Title	Pressure Sensing Insole	
Size: Legal	Number: 02	Revision: 02
Date: 1/6/2020	Sheet 1 of 1	
File: C:\Users\..\Insole Schematic V0.2.SchDoc	Drawn By: H. Fletcher	

Board Assembly

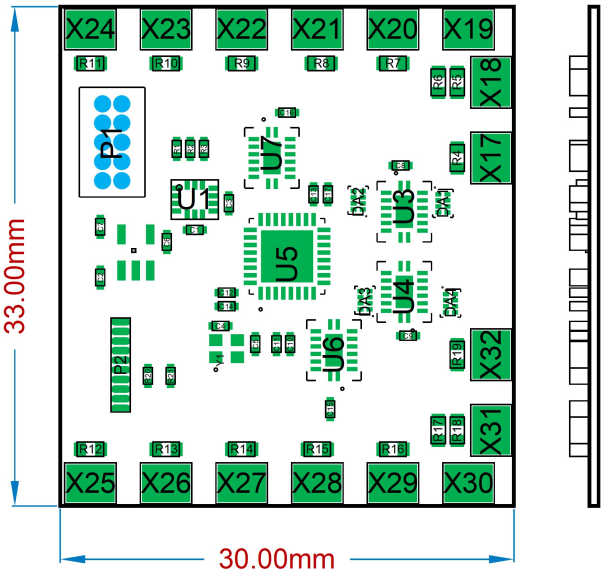

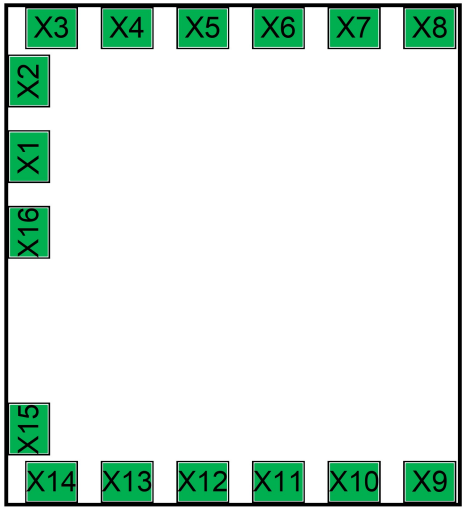

Signal Layers

Top Layer (Scale 2:1)

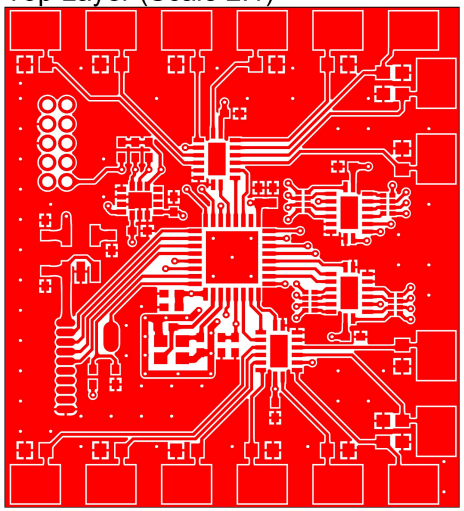

Internal Power (Scale 2:1)

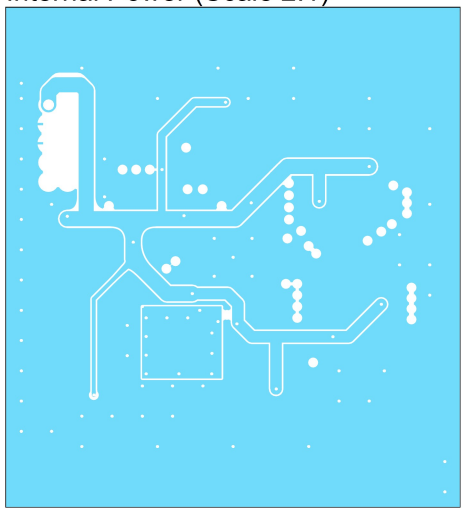

Bottom Layer (Scale 2:1)

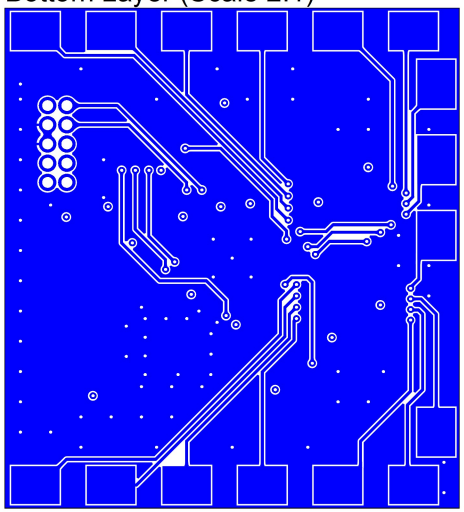

Biofeedback Insole V0.2

Silvano Todesco 26/07/2019 (V0.1)
Harrison Fletcher 09/10/2019 (V0.2)

Scale 2:1

Lab DC Power Supply

Background

In order to power my electronics projects in my home lab, I completed a DC power supply design based on the open hardware uSupply designed by Dave Jones. In a series of videos posted on the EEVBlog Dave explains the design challenges and decisions associated with a small variable DC power supply. My personal design is very similar to the final solution Dave settles on, with only minor differences. This project represents my first PCB design project with Altium Designer and as an introduction to opamp feedback topologies

Hardware Design

The regulation topology for this supply is based on the Linear Technologies LT3083 linear regulator. An adjustable switching regulator serves as a pre-regulator to the linear stage. This helps lower the power dissipated in the LT3083 by lowering the input voltage to a level closer to the desired output, such that the LT3083 needs only to drop a few volts instead of several when a small output voltage is desired. A feedback loop compares the current through a high side shunt resistor to a 12bit set point voltage generated by either PWM or a DAC. As the current limit is achieved U8B switches Q1, regulating down the set pin of the LT3083. A small second board is mounted on the front panel of the enclosure and provides a LCD screen, LEDs and buttons.

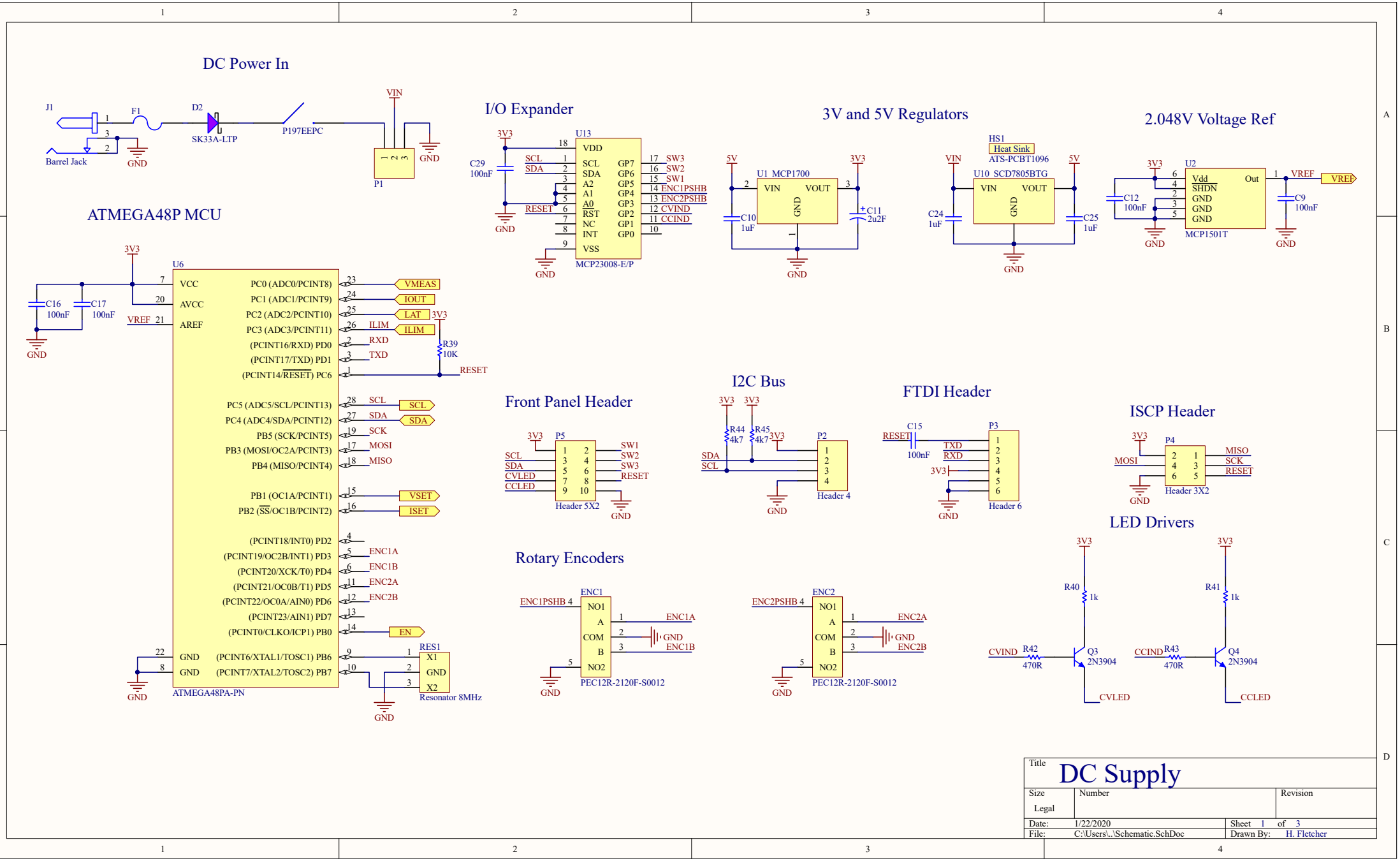
DC Power In
J1
Barrel Jack
F1
D2
SK33A-LTP
P197EEPC
VIN
P1
GND
I/O Expander
U13
MCP23008-E/P
3V3
C29
100nF
SCL
SDA
RESET
VDD
VSS
A2
A1
A0
RST
NC
INT
GP7
GP6
GP5
GP4
GP3
GP2
GP1
GP0
SW3
SW2
SW1
ENC1PSHB
ENC2PSHB
CVIND
CCIND
3V and 5V Regulators
U1 MCP1700
VIN
VOUT
GND
5V
C10
1uF
C11
2u2F
HS1
Heat Sink
ATS-PCBT1096
U10 SCD7805BTG
C24
1uF
C25
1uF
2.048V Voltage Ref
U2
MCP1501T
Vdd
SHDN
Out
VREF
C12
100nF
C9
100nF
ATMEGA48P MCU
U6
ATMEGA48PA-PN
VCC
AVCC
AREF
C16
100nF
C17
100nF
PC0 (ADC0/PCINT8)
PC1 (ADC1/PCINT9)
PC2 (ADC2/PCINT10)
PC3 (ADC3/PCINT11)
(PCINT16/RXD) PD0
(PCINT17/TXD) PD1
(PCINT14/RESET) PC6
PC5 (ADC5/SCL/PCINT13)
PC4 (ADC4/SDA/PCINT12)
PB5 (SCK/PCINT5)
PB3 (MOSI/OC2A/PCINT3)
PB4 (MISO/PCINT4)
PB1 (OC1A/PCINT1)
PB2 (SS/OC1B/PCINT2)
(PCINT18/INT0) PD2
(PCINT19/OC2B/INT1) PD3
(PCINT20/XCK/T0) PD4
(PCINT21/OC0B/T1) PD5
(PCINT22/OC0A/AIN0) PD6
(PCINT23/AIN1) PD7
(PCINT0/CLKO/ICP1) PB0
(PCINT6/XTAL1/TOSC1) PB6
(PCINT7/XTAL2/TOSC2) PB7
VMEAS
IOUT
LAT
ILIM
RXD
TXD
R39
10K
VSET
ISET
EN
ENC1A
ENC1B
ENC2A
ENC2B
RES1
Resonator 8MHz
X1
X2
Front Panel Header
P5
Header 5X2
CVLED
CCLED
I2C Bus
R44
4k7
R45
4k7
P2
Header 4
FTDI Header
C15
100nF
P3
Header 6
ISCP Header
P4
Header 3X2
MISO
MOSI
Rotary Encoders
ENC1
ENC2
NO1
NO2
COM
PEC12R-2120F-S0012
ENC1PSHB 4
ENC2PSHB 4
LED Drivers
R40
1k
R41
1k
R42
470R
R43
470R
Q3
2N3904
Q4
2N3904
CVIND
CCIND
Title
DC Supply
Size
Legal
Number
Revision
Date: 1/22/2020
Sheet 1 of 3
File: C:\Users\..\Schematic.SchDoc
Drawn By: H. Fletcher

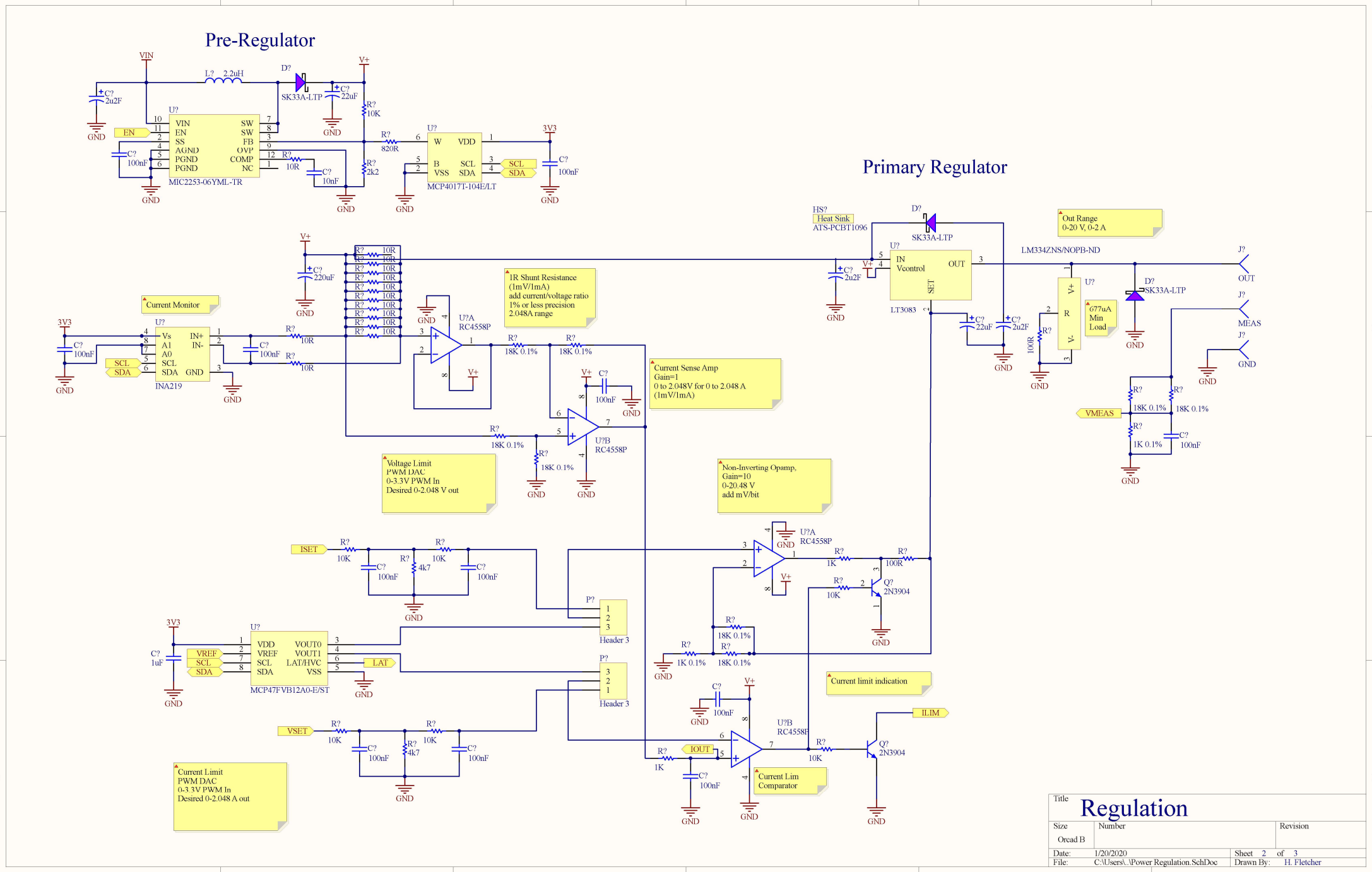
Pre-Regulator
Primary Regulator
VIN
L? 2.2uH
D?
SK33A-LTP
C? 22uF
V+
R? 10K
C? 2u2F
GND
U?
VIN
EN
SS
AGND
PGND
PGND
SW
SW
FB
OVP
COMP
NC
MIC2253-06YML-TR
R? 820R
R? 10R
C? 10nF
R? 2k2
C? 100nF
3V3
W
VDD
B
VSS
SCL
SDA
MCP4017T-104E/LT
HS?
Heat Sink
ATS-PCBT1096
Out Range
0-20 V, 0-2 A
IN
Vcontrol
OUT
SET
LT3083
LM334ZNS/NOPB-ND
J?
OUT
MEAS
677uA
Min
Load
100R
C? 220uF
Current Monitor
Vs
A1
A0
IN+
IN-
INA219
R? 10R
IR Shunt Resistance
(1mV/1mA)
add current/voltage ratio
1% or less precision
2.048A range
U?A
RC4558P
R? 18K 0.1%
Current Sense Amp
Gain=1
0 to 2.048V for 0 to 2.048 A
(1mV/1mA)
U?B
RC4558P
Voltage Limit
PWM DAC
0-3.3V PWM In
Desired 0-2.048 V out
Non-Inverting Opamp,
Gain=10
0-20.48 V
add mV/bit
VMEAS
1K 0.1%
ISET
R? 4k7
P?
Header 3
VREF
LAT
MCP47FVB12A0-E/ST
C? 1uF
R? 1K
R? 100R
Q?
2N3904
Current limit indication
ILIM
VSET
IOUT
Current Lim
Comparator
Current Limit
PWM DAC
0-3.3V PWM In
Desired 0-2.048 A out
Title
Regulation
Size
Orcad B
Number
Revision
Date: 1/20/2020
Sheet 2 of 3
File: C:\Users\..\Power Regulation.SchDoc
Drawn By: H. Fletcher

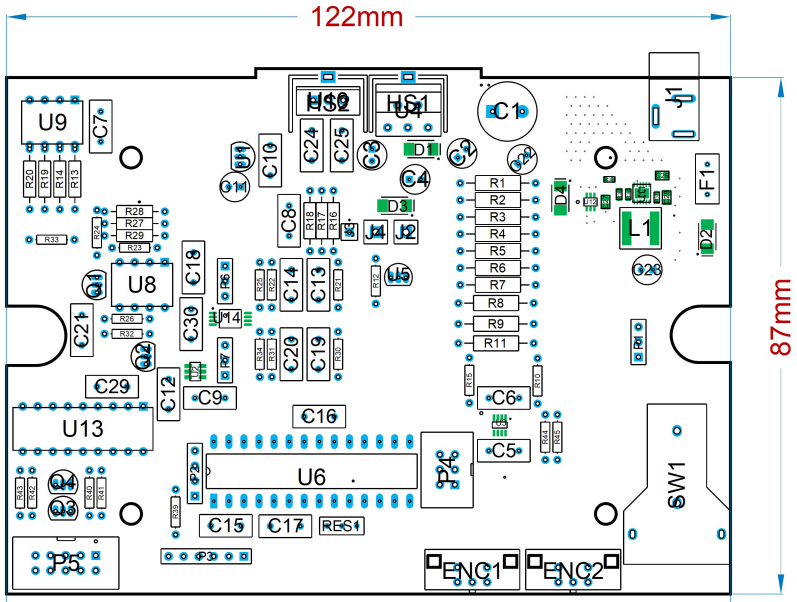

Top Layer (Scale 1:1)

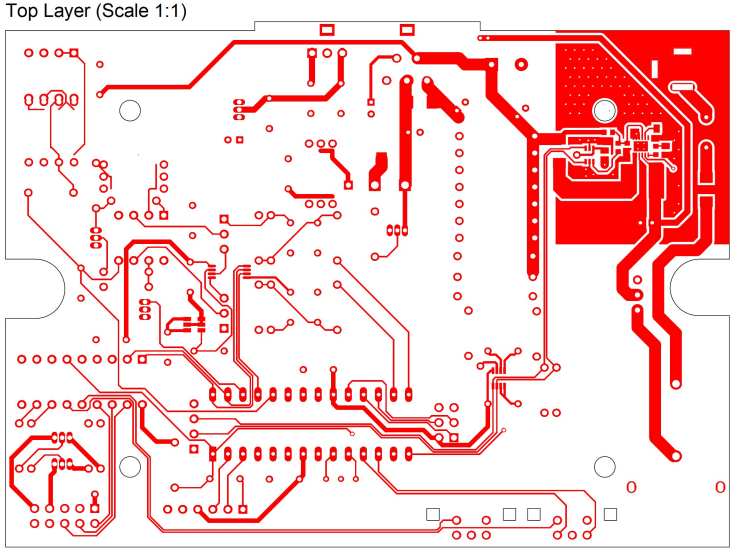

Bottom Layer (Scale 1:1)

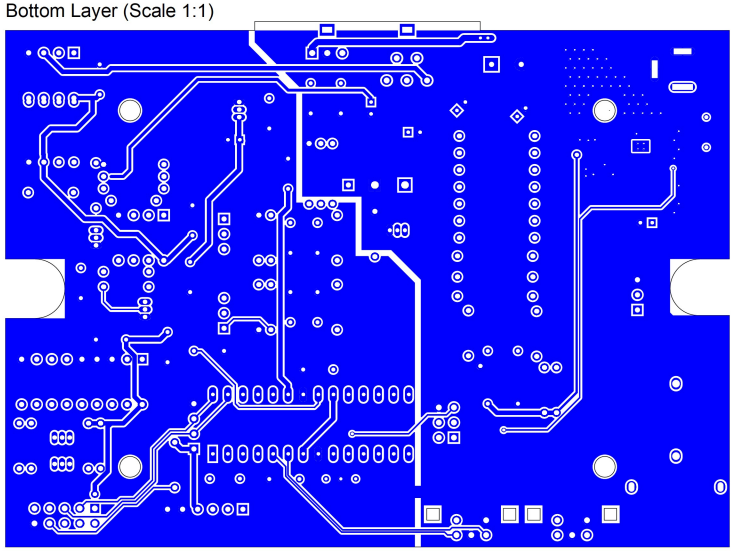

Notes:
All mounting holes M3

DC Lab Supply

Harrison Fletcher 09/12/2018
Scale 1:1

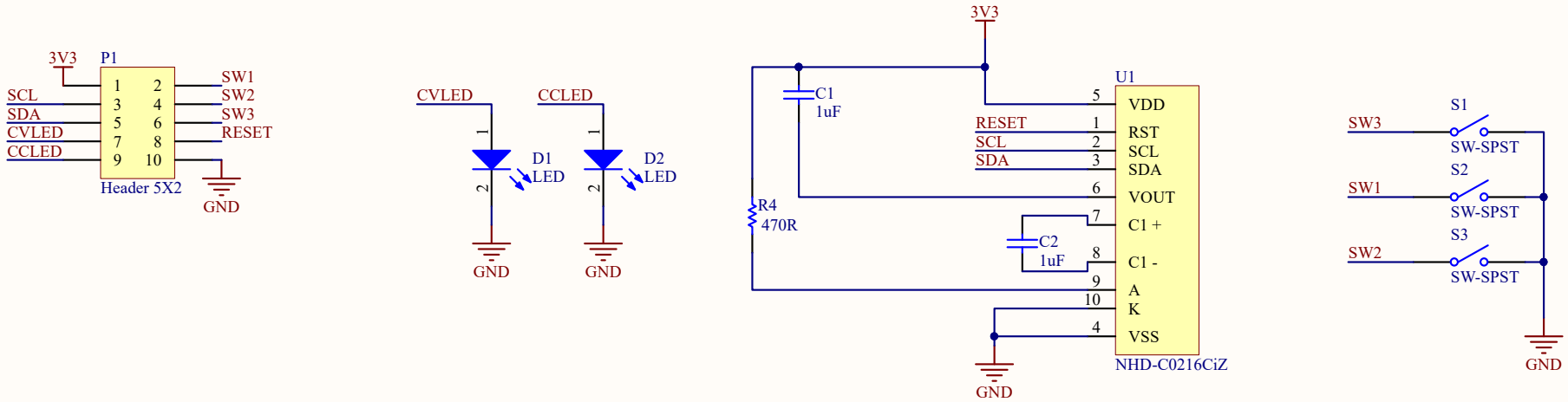

Title	Front Panel	
Size A	Number	Revision
Date: 1/20/2020	Sheet 3 of 3	
File: C:\Users\..\LCDandInterface.SchDoc	Drawn By: H. Fletcher	

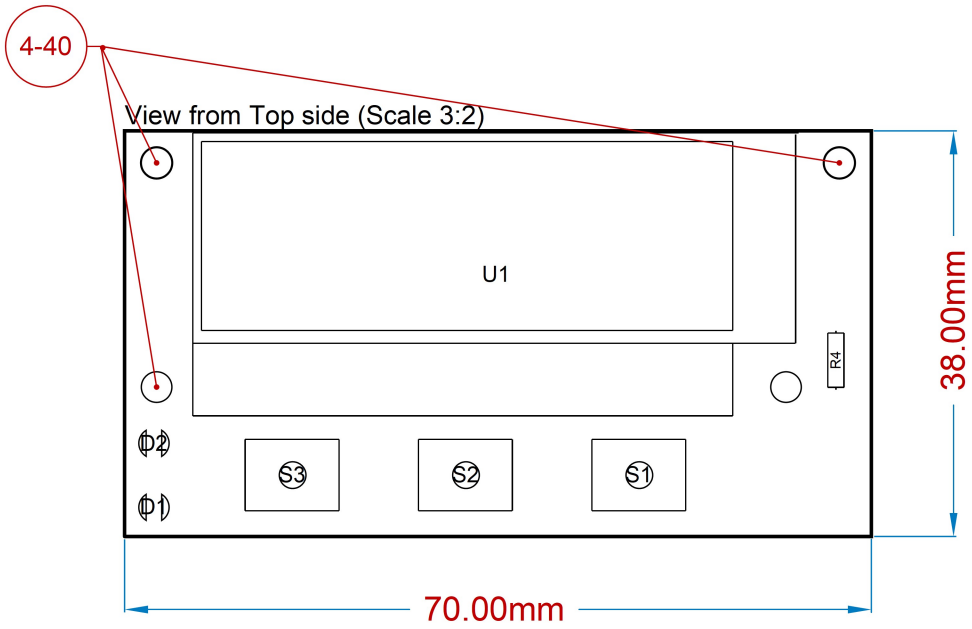

Top Layer (Scale 3:2)

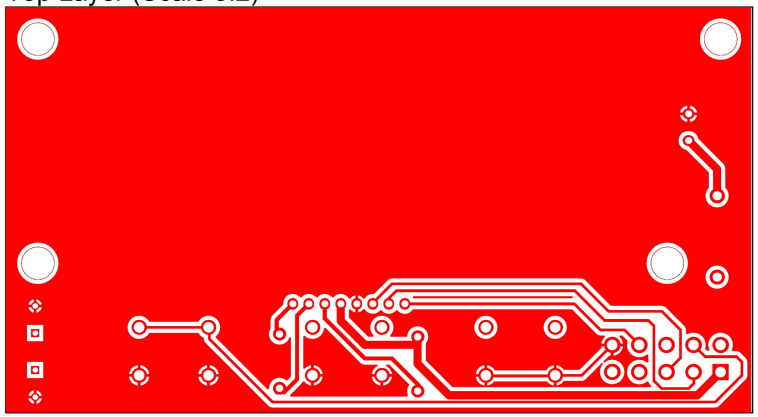

Bottom Layer (Scale 3:2)

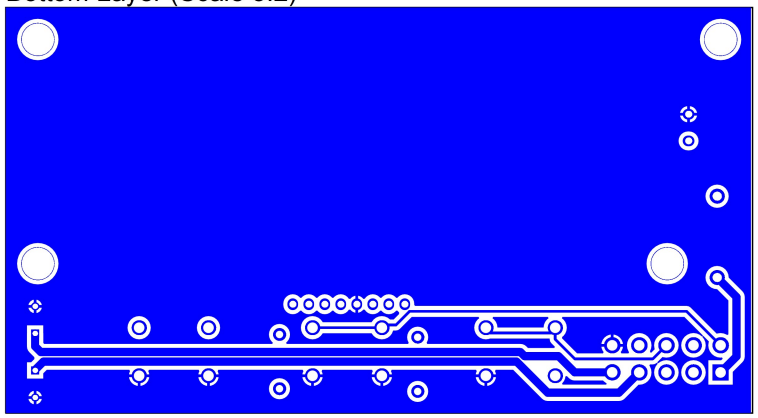

DC Lab Supply - Front Panel

Harrison Fletcher 09/12/2018
Scale 3:2

Tracking Wheel

Background

In December 2017 ASAsoft, a Victoria, BC based manufacturer of polymer power line insulators, reached out to Dennis Hore, an Associate Professor of the University of Victoria (UVIC), to create a partnership focused on researching the material performance of polymer insulators. Specifically, how certain material properties such as hydrophobicity change as an insulator is exposed to contaminates. Understanding how these contaminants accumulate and interact with surface and bulk polymer requires a controlled test environment in which insulators can be contaminated and then subjected to high voltages. Such requirements are satisfied by an electromechanical test apparatus known as the tracking wheel.

Completed as a joint effort between UVIC's Science Machine Shop and Department of Chemistry's Electronics Shop, the proposed tracking wheel design consists of the following primary components (Figure 1):

1. Rotor
2. Lift
3. Tanks
4. High Voltage Contactor
5. Frame

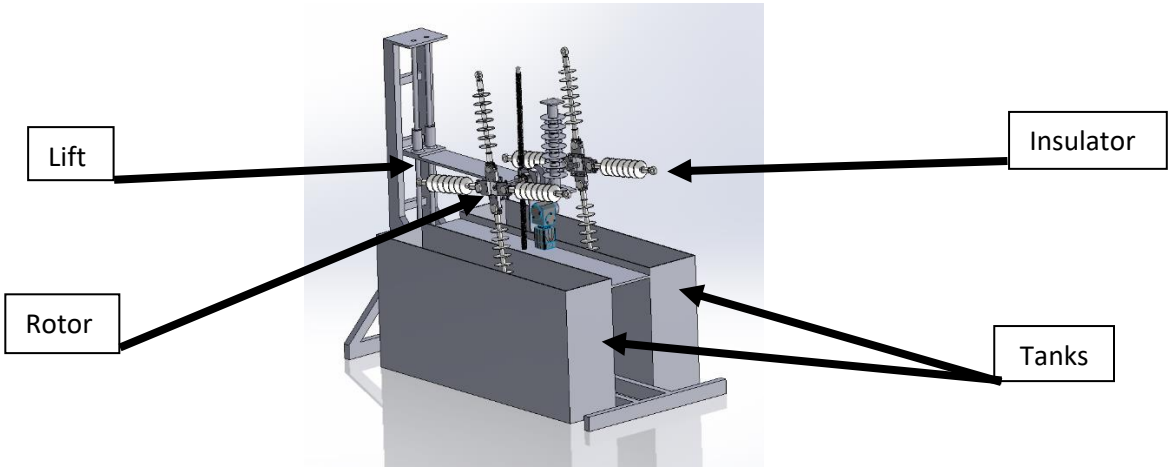

Figure 1: Tracking Wheel Apparatus (Isometric View)

Control System Design

To achieve complete automation of the electromechanical assembly it is first required to understand what actions it must perform. A tracking wheel test simply consists of repeating a specified number of test cycles. Each cycle Is composed of the following four steps (Figure 2).

Step 1: Contaminate
The insulator is submerged in the contaminant solution.

Step 2: Drip
After being submerged the excess contaminant solution drips off the insulator

Step 3: Energize
The user specified voltage is applied to the active end of the insulator

Step 4: Idle
After being energized, the insulator in position 2 drains of any excess charge and sits idle for contamination

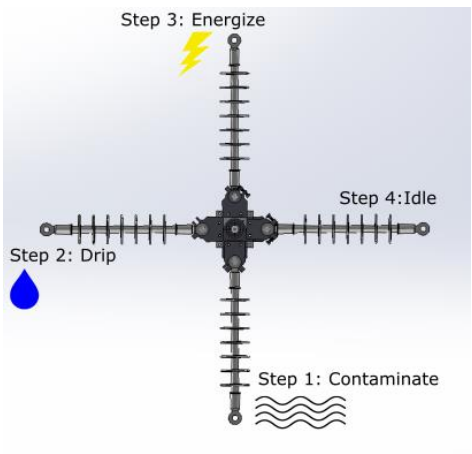

Figure 2: Tracking Wheel Cycle Diagram

Therefore, to complete the proposed tracking wheel design, a control system must be implemented which addresses the following objectives:

1. Fully automates all actuations of the high voltage source, rotor motor and lift motor to perform each step in an aforementioned test cycle
2. Repeat a specified number of cycles
3. Allows the user a means of inputting test parameters
4. Provides multiple safety measures and fail-safe operation
5. Monitors and displays test progress
6. Alerts the user of system malfunctions

To meet these requirements, a PLC based control system was assembled with off the shelf components. The design primally relies on the discrete switching of relays to energize motors and HV sources in a control sequence. An off the shelf HMI was ideal for providing a means of inputting test parameters and providing alerts and feedback.