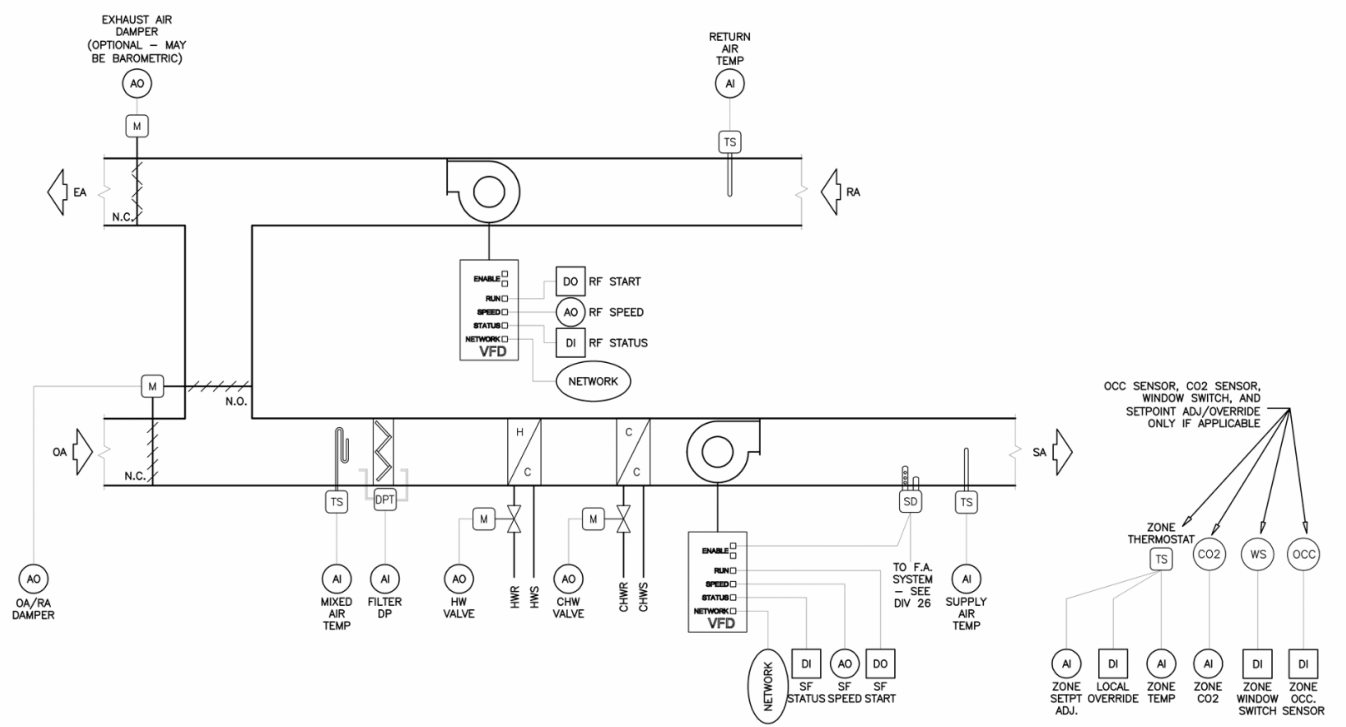
EXHAUST AIR DAMPER (OPTIONAL – MAY BE BAROMETRIC)
AO
M
EA
N.C.
RETURN AIR TEMP
AI
TS
RA
ENABLE
RUN
SPEED
STATUS
NETWORK
VFD
DO
RF START
AO
RF SPEED
DI
RF STATUS
NETWORK
M
N.O.
OA
N.C.
TS
DPT
H
C
C
C
M
M
SD
TS
SA
OCC SENSOR, CO2 SENSOR, WINDOW SWITCH, AND SETPOINT ADJ/OVERRIDE ONLY IF APPLICABLE
ZONE THERMOSTAT
TS
CO2
WS
OCC
AO
OA/RA DAMPER
AI
MIXED AIR TEMP
AI
FILTER DP
AO
HW VALVE
HWR
HWS
AO
CHW VALVE
CHWR
CHWS
ENABLE
RUN
SPEED
STATUS
NETWORK
VFD
TO F.A. SYSTEM – SEE DIV 26
AI
SUPPLY AIR TEMP
NETWORK
DI
SF STATUS
AO
SF SPEED
DO
SF START
AI
ZONE SETPT ADJ.
DI
LOCAL OVERRIDE
AI
ZONE TEMP
AI
ZONE CO2
DI
ZONE WINDOW SWITCH
DI
ZONE OCC. SENSOR

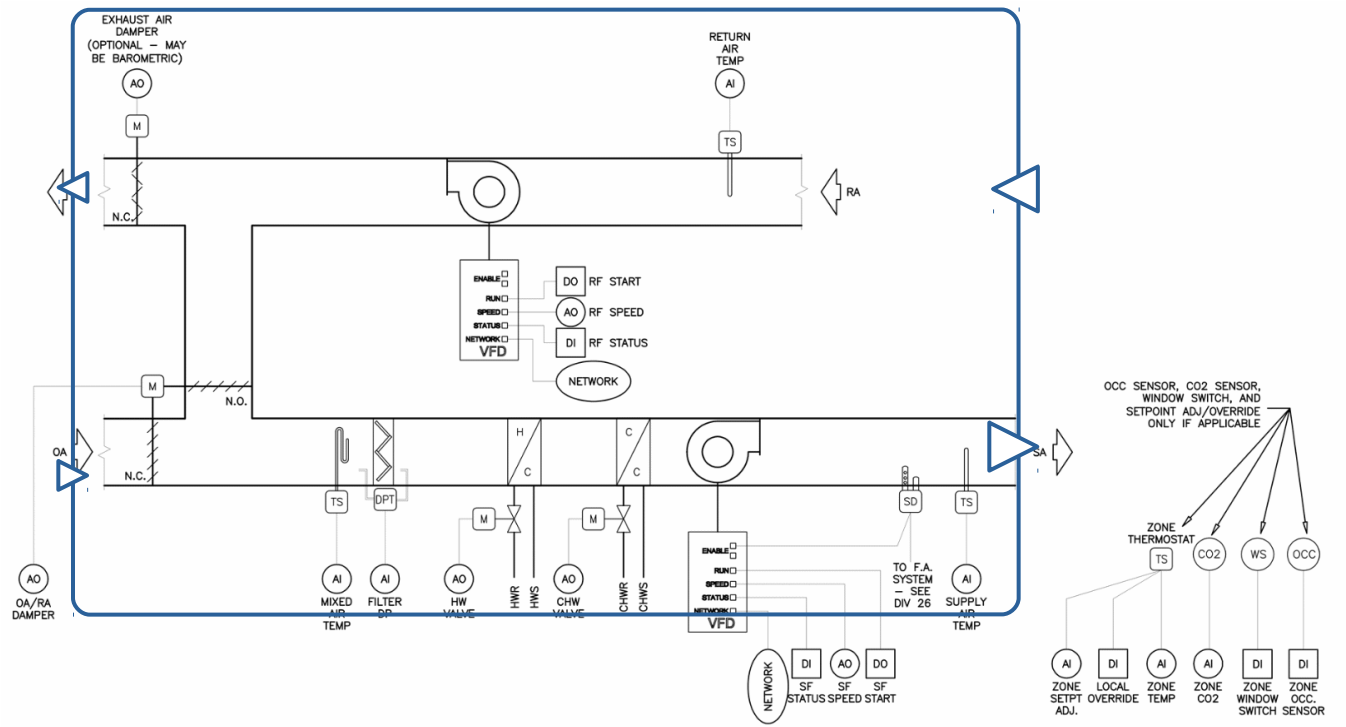
EXHAUST AIR DAMPER (OPTIONAL – MAY BE BAROMETRIC)
AO
M
N.C.
RETURN AIR TEMP
AI
TS
RA
ENABLE
RUN
SPEED
STATUS
NETWORK
VFD
DO
RF START
AO
RF SPEED
DI
RF STATUS
NETWORK
M
N.O.
OA
N.C.
TS
DPT
H
C
C
C
M
M
SD
TS
SA
AO
OA/RA DAMPER
AI
MIXED AIR TEMP
AI
FILTER DP
AO
HW VALVE
HWR
HWS
AO
CHW VALVE
CHWR
CHWS
ENABLE
RUN
SPEED
STATUS
NETWORK
VFD
TO F.A. SYSTEM – SEE DIV 26
AI
SUPPLY AIR TEMP
NETWORK
DI
SF STATUS
AO
SF SPEED
DO
SF START
OCC SENSOR, CO2 SENSOR, WINDOW SWITCH, AND SETPOINT ADJ/OVERRIDE ONLY IF APPLICABLE
ZONE THERMOSTAT
TS
CO2
WS
OCC
AI
ZONE SETPT ADJ.
DI
LOCAL OVERRIDE
AI
ZONE TEMP
AI
ZONE CO2
DI
ZONE WINDOW SWITCH
DI
ZONE OCC. SENSOR

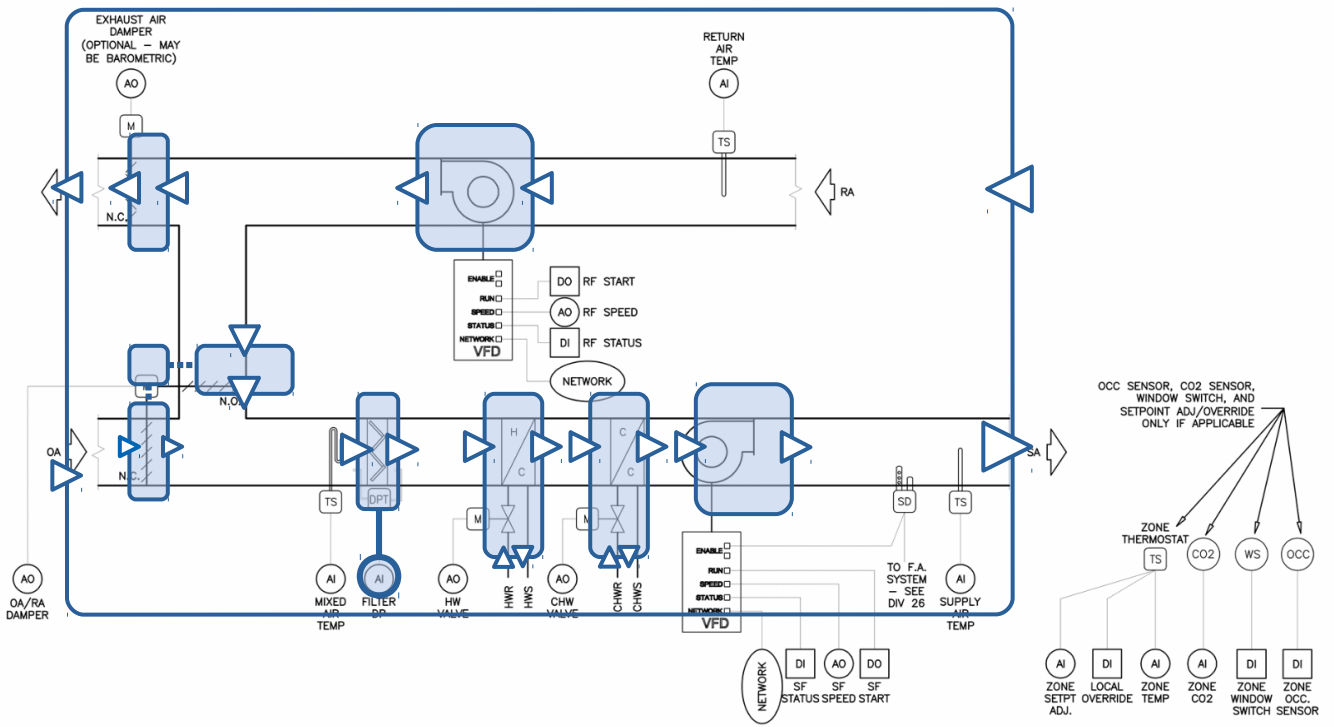
EXHAUST AIR DAMPER (OPTIONAL – MAY BE BAROMETRIC)
AO
M
N.C.
RETURN AIR TEMP
AI
TS
RA
ENABLE
RUN
SPEED
STATUS
NETWORK
VFD
DO
RF START
AO
RF SPEED
DI
RF STATUS
NETWORK
N.O.
OA
N
TS
DPT
H
C
M
SD
TS
SA
AO
OA/RA DAMPER
AI
MIXED AIR TEMP
AI
FILTER DP
AO
HW VALVE
HWR
HWS
AO
CHW VALVE
CHWR
CHWS
TO F.A. SYSTEM – SEE DIV 26
AI
SUPPLY AIR TEMP
NETWORK
DI
SF STATUS
AO
SF SPEED
DO
SF START
OCC SENSOR, CO2 SENSOR, WINDOW SWITCH, AND SETPOINT ADJ/OVERRIDE ONLY IF APPLICABLE
ZONE THERMOSTAT
TS
CO2
WS
OCC
AI
ZONE SETPT ADJ.
DI
LOCAL OVERRIDE
AI
ZONE TEMP
AI
ZONE CO2
DI
ZONE WINDOW SWITCH
DI
ZONE OCC. SENSOR

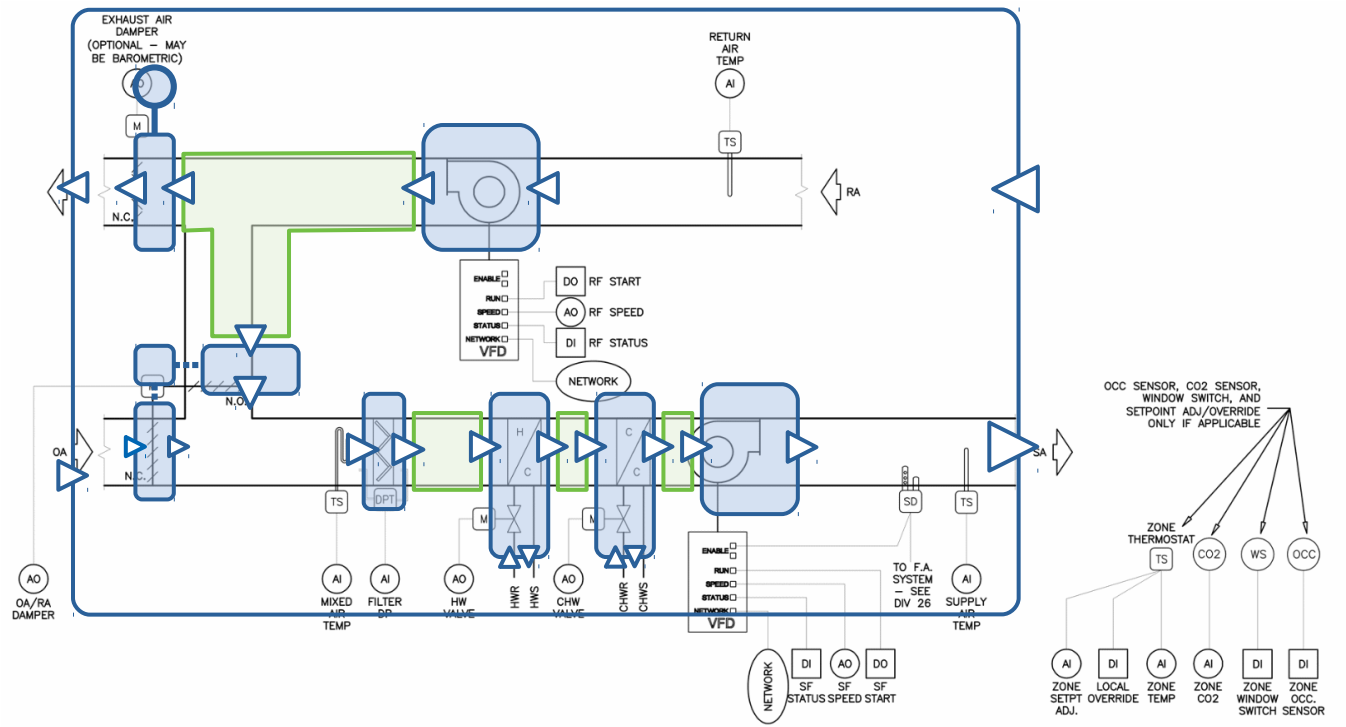
EXHAUST AIR DAMPER (OPTIONAL – MAY BE BAROMETRIC)
M
N.C.
N.O.
OA
N
RETURN AIR TEMP
AI
TS
RA
ENABLE
RUN
SPEED
STATUS
NETWORK
VFD
DO
RF START
AO
RF SPEED
DI
RF STATUS
NETWORK
TS
DPT
H
C
M
SD
SA
AO
OA/RA DAMPER
AI
MIXED AIR TEMP
AI
FILTER DP
AO
HW VALVE
HWR
HWS
AO
CHW VALVE
CHWR
CHWS
TO F.A. SYSTEM – SEE DIV 26
AI
SUPPLY AIR TEMP
NETWORK
DI
SF STATUS
AO
SF SPEED
DO
SF START
OCC SENSOR, CO2 SENSOR, WINDOW SWITCH, AND SETPOINT ADJ/OVERRIDE ONLY IF APPLICABLE
ZONE THERMOSTAT
TS
CO2
WS
OCC
AI
ZONE SETPT ADJ.
DI
LOCAL OVERRIDE
AI
ZONE TEMP
AI
ZONE CO2
DI
ZONE WINDOW SWITCH
DI
ZONE OCC. SENSOR

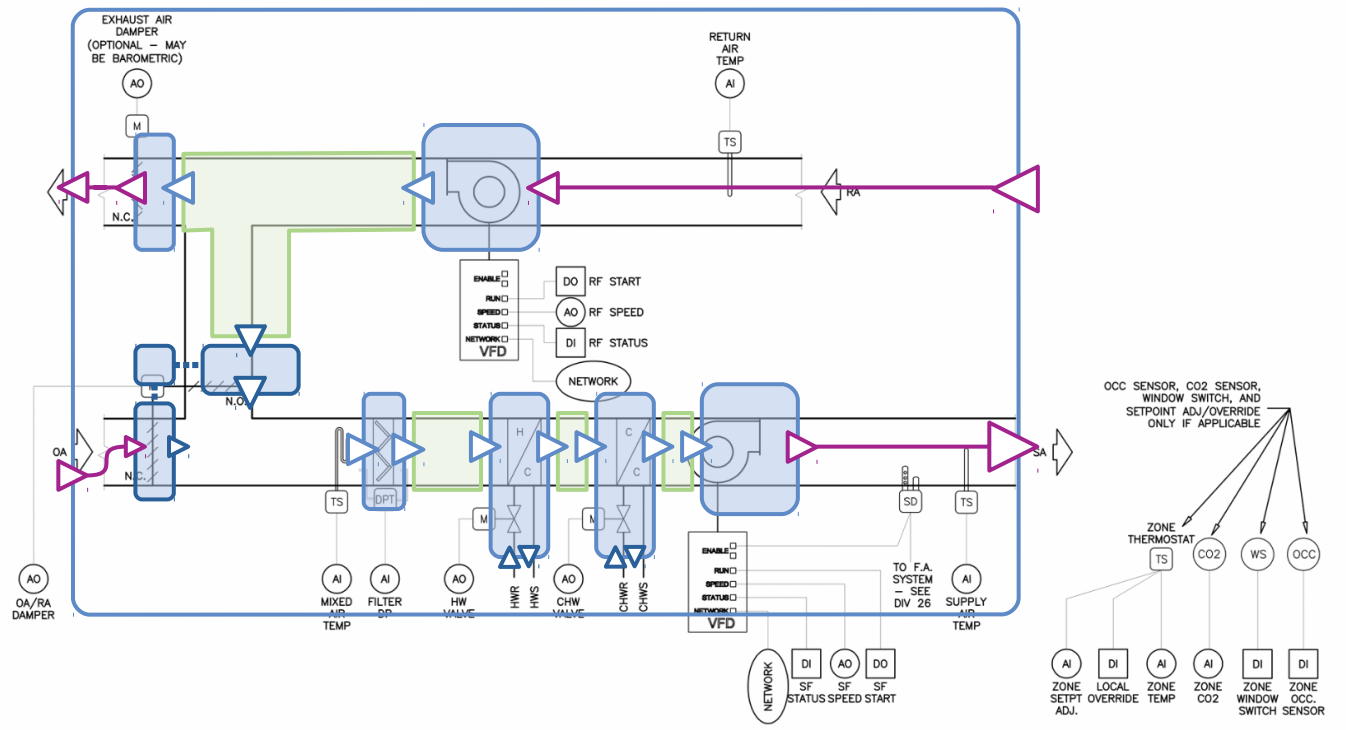
EXHAUST AIR DAMPER (OPTIONAL – MAY BE BAROMETRIC)
AO
M
N.C.
N.O.
OA
N
AO
OA/RA DAMPER
RETURN AIR TEMP
AI
TS
RA
ENABLE
RUN
SPEED
STATUS
NETWORK
VFD
DO
RF START
AO
RF SPEED
DI
RF STATUS
NETWORK
TS
DPT
AI
MIXED AIR TEMP
AI
FILTER DP
AO
HW VALVE
HWR
HWS
AO
CHW VALVE
CHWR
CHWS
H
C
M
SD
TO F.A. SYSTEM – SEE DIV 26
TS
AI
SUPPLY AIR TEMP
SA
NETWORK
DI
SF STATUS
AO
SF SPEED
DO
SF START
OCC SENSOR, CO2 SENSOR, WINDOW SWITCH, AND SETPOINT ADJ/OVERRIDE ONLY IF APPLICABLE
ZONE THERMOSTAT
TS
CO2
WS
OCC
AI
ZONE SETPT ADJ.
DI
LOCAL OVERRIDE
AI
ZONE TEMP
AI
ZONE CO2
DI
ZONE WINDOW SWITCH
DI
ZONE OCC. SENSOR

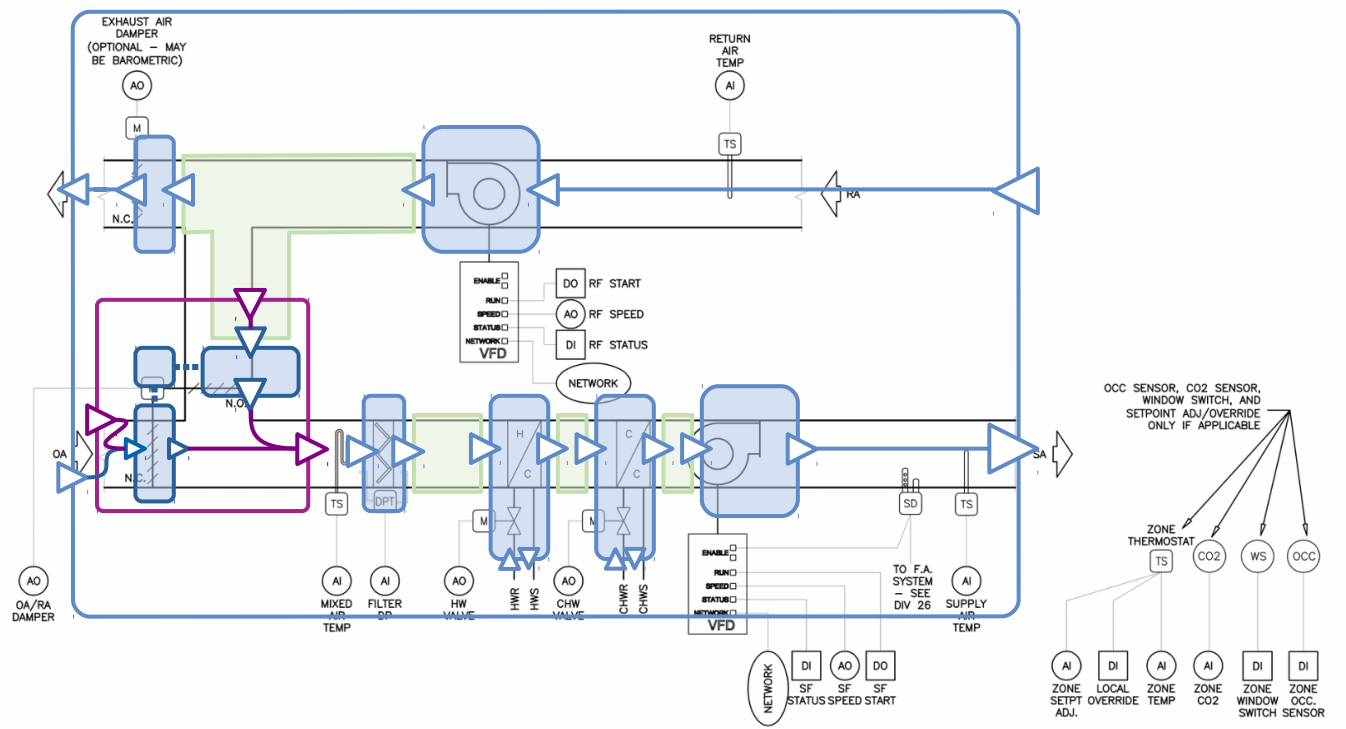
EXHAUST AIR DAMPER (OPTIONAL – MAY BE BAROMETRIC)
AO
M
N.C.
RETURN AIR TEMP
AI
TS
RA
ENABLE
RUN
SPEED
STATUS
NETWORK
VFD
DO
RF START
AO
RF SPEED
DI
RF STATUS
NETWORK
N.O.
OA
N
TS
DPT
H
C
M
SD
SA
AO
OA/RA DAMPER
AI
MIXED AIR TEMP
AI
FILTER DP
AO
HW VALVE
HWR
HWS
AO
CHW VALVE
CHWR
CHWS
TO F.A. SYSTEM – SEE DIV 26
AI
SUPPLY AIR TEMP
NETWORK
DI
SF STATUS
AO
SF SPEED
DO
SF START
OCC SENSOR, CO2 SENSOR, WINDOW SWITCH, AND SETPOINT ADJ/OVERRIDE ONLY IF APPLICABLE
ZONE THERMOSTAT
TS
CO2
WS
OCC
AI
ZONE SETPT ADJ.
DI
LOCAL OVERRIDE
AI
ZONE TEMP
AI
ZONE CO2
DI
ZONE WINDOW SWITCH
DI
ZONE OCC. SENSOR

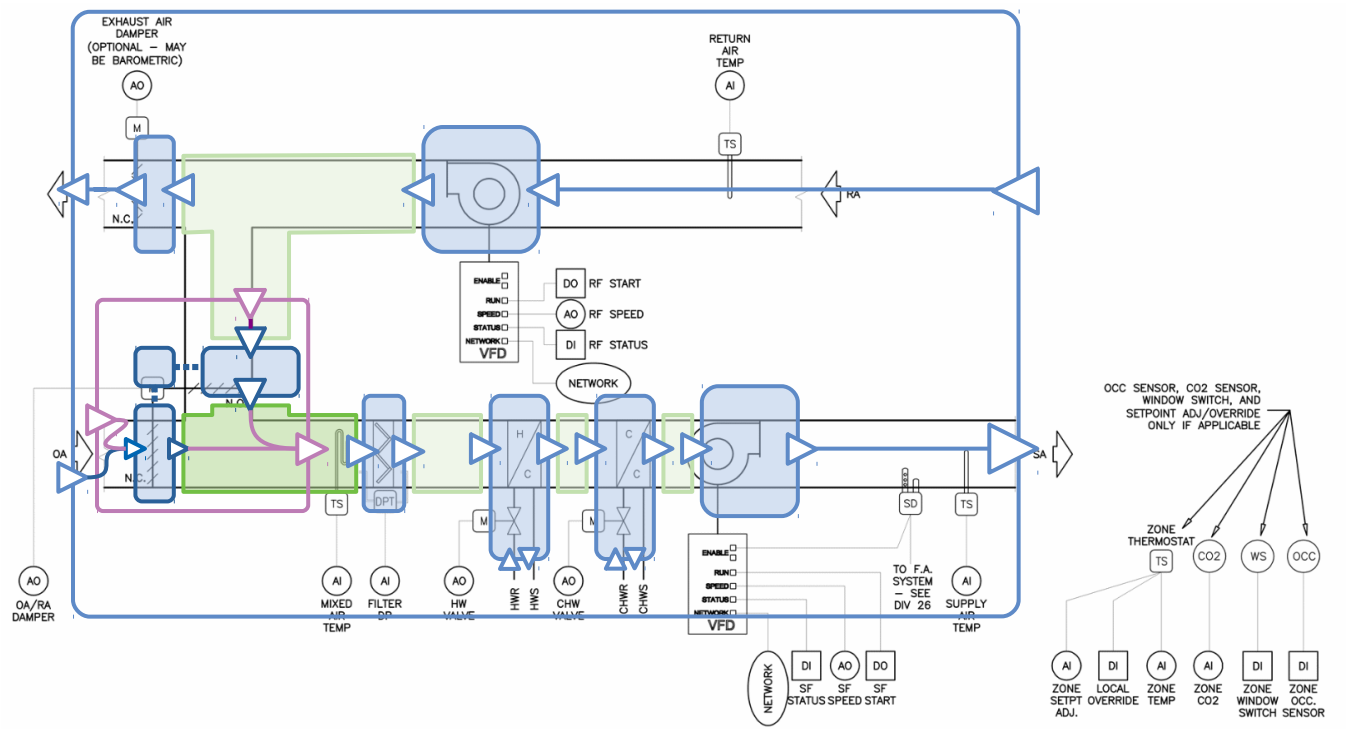
EXHAUST AIR DAMPER (OPTIONAL – MAY BE BAROMETRIC)
AO
M
N.C.
RETURN AIR TEMP
AI
TS
RA
ENABLE
RUN
SPEED
STATUS
NETWORK
VFD
DO
RF START
AO
RF SPEED
DI
RF STATUS
NETWORK
N.C.
OA
N.C.
TS
DPT
H
C
C
C
M
M
SA
SD
TS
AO
OA/RA DAMPER
AI
MIXED AIR TEMP
AI
FILTER DP
AO
HW VALVE
HWR
HWS
AO
CHW VALVE
CHWR
CHWS
ENABLE
RUN
SPEED
STATUS
NETWORK
VFD
TO F.A. SYSTEM – SEE DIV 26
AI
SUPPLY AIR TEMP
NETWORK
DI
SF STATUS
AO
SF SPEED
DO
SF START
OCC SENSOR, CO2 SENSOR, WINDOW SWITCH, AND SETPOINT ADJ/OVERRIDE ONLY IF APPLICABLE
ZONE THERMOSTAT
TS
CO2
WS
OCC
AI
ZONE SETPT ADJ.
DI
LOCAL OVERRIDE
AI
ZONE TEMP
AI
ZONE CO2
DI
ZONE WINDOW SWITCH
DI
ZONE OCC. SENSOR