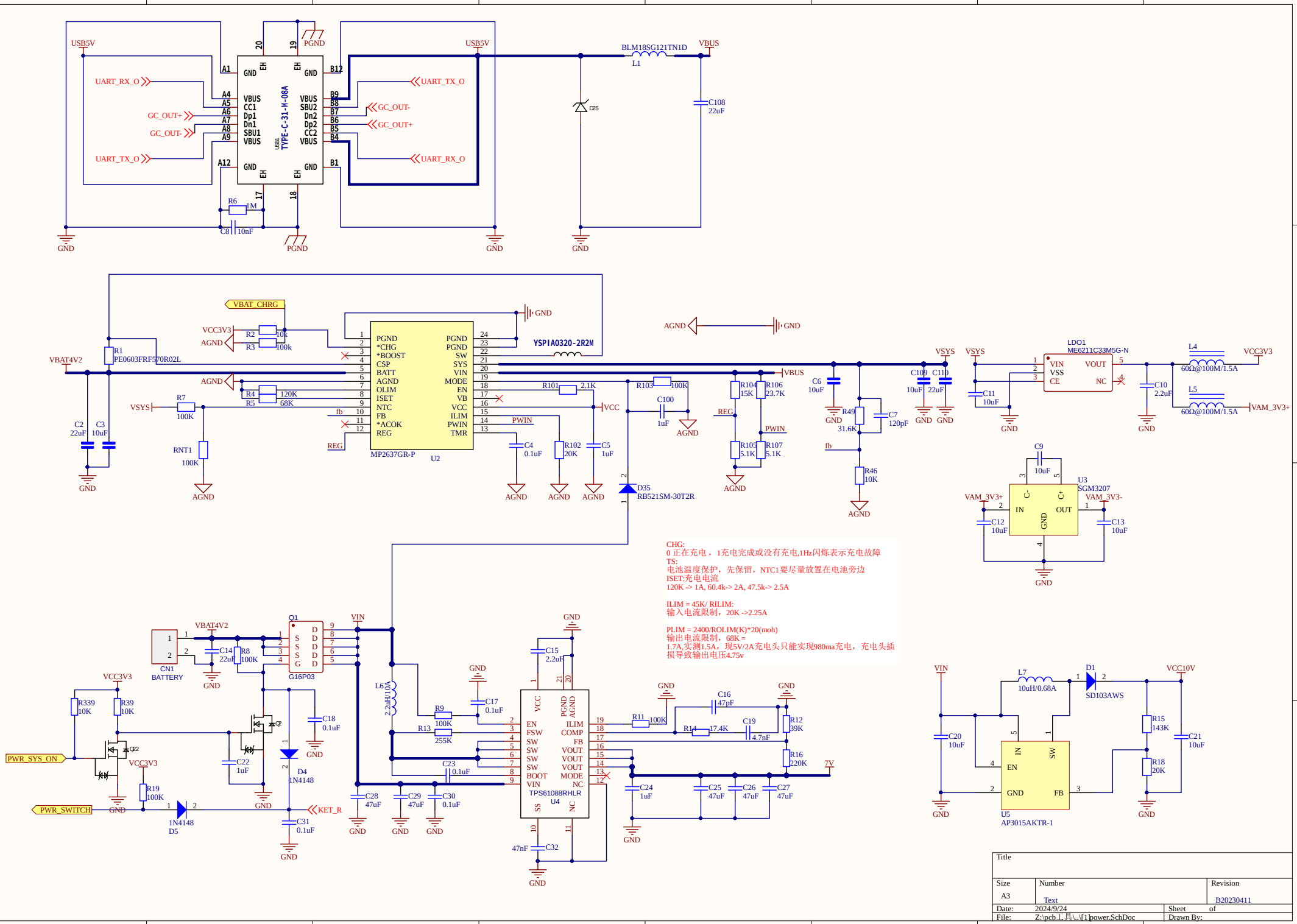
USB5V
UART_RX_O
GC_OUT+
GC_OUT-
UART_TX_O
TYPE-C-31-M-08A
USB1
GND
VBUS
CC1
Dp1
Dn1
SBU1
CC2
Dn2
Dp2
SBU2
PGND
R6 1M
C8 10nF
BLM18SG121TN1D
L1
VBUS
C108 22uF
D25
VBAT_CHRG
VCC3V3
AGND
R1 PE0603FRF570R02L
VBAT4V2
R2 10k
R3 100k
R4 120K
R5 68K
R7 100K
RNT1 100K
C2 22uF
C3 10uF
MP2637GR-P
U2
PGND
*CHG
*BOOST
CSP
BATT
AGND
OLIM
ISET
NTC
FB
*ACOK
REG
SYS
VIN
MODE
EN
VB
VCC
ILIM
PWIN
TMR
YSPIA0320-2R2M
R101 2.1K
R102 20K
C4 0.1uF
C5 1uF
R103 100K
C100 1uF
D35 RB521SM-30T2R
R104 15K
R106 23.7K
R105 5.1K
R107 5.1K
C6 10uF
R49 31.6K
C7 120pF
R46 10K
C109 10uF
C110 22uF
LDO1
ME6211C33M5G-N
VIN
VSS
CE
VOUT
NC
C11 10uF
C10 2.2uF
L4 60Ω@100M/1.5A
L5 60Ω@100M/1.5A
VCC3V3
VAM_3V3+
C9 10uF
U3
SGM3207
IN
OUT
C12 10uF
C13 10uF
VAM_3V3-
CHG:
0 正在充电，1充电完成或没有充电,1Hz闪烁表示充电故障
TS:
电池温度保护，先保留，NTC1要尽量放置在电池旁边
ISET:充电电流
120K -> 1A, 60.4k-> 2A, 47.5k-> 2.5A
ILIM = 45K/ RILIM:
输入电流限制，20K ->2.25A
PLIM = 2400/ROLIM(K)*20(moh)
输出电流限制，68K =
1.7A,实测1.5A，现5V/2A充电头只能实现980ma充电，充电头插
损导致输出电压4.75v
CN1
BATTERY
C14 22uF
R8 100K
Q1
G16P03
VIN
L6 2.2uH/10A
R9 100K
R13 255K
C17 0.1uF
C23 0.1uF
C15 2.2uF
TPS61088RHLR
U4
EN
FSW
SW
BOOT
VCC
PGND
AGND
ILIM
COMP
FB
VOUT
MODE
NC
SS
R11 100K
R14 17.4K
C16 47pF
C19 4.7nF
R12 39K
R16 220K
7V
C24 1uF
C25 47uF
C26 47uF
C27 47uF
C32 47nF
R339 10K
R39 10K
PWR_SYS_ON
PWR_SWITCH
R19 100K
1N4148
D5
C22 1uF
C18 0.1uF
D4 1N4148
C31 0.1uF
KET_R
C28 47uF
C29 47uF
C30 0.1uF
L7 10uH/0.68A
D1 SD103AWS
VCC10V
C20 10uF
R15 143K
R18 20K
C21 10uF
U5
AP3015AKTR-1
EN
SW
GND
FB
Title
Size A3
Number Text
Revision B20230411
Date: 2024/9/24
Sheet of
File: Z:\pcb工具\..\[1]power.SchDoc
Drawn By:

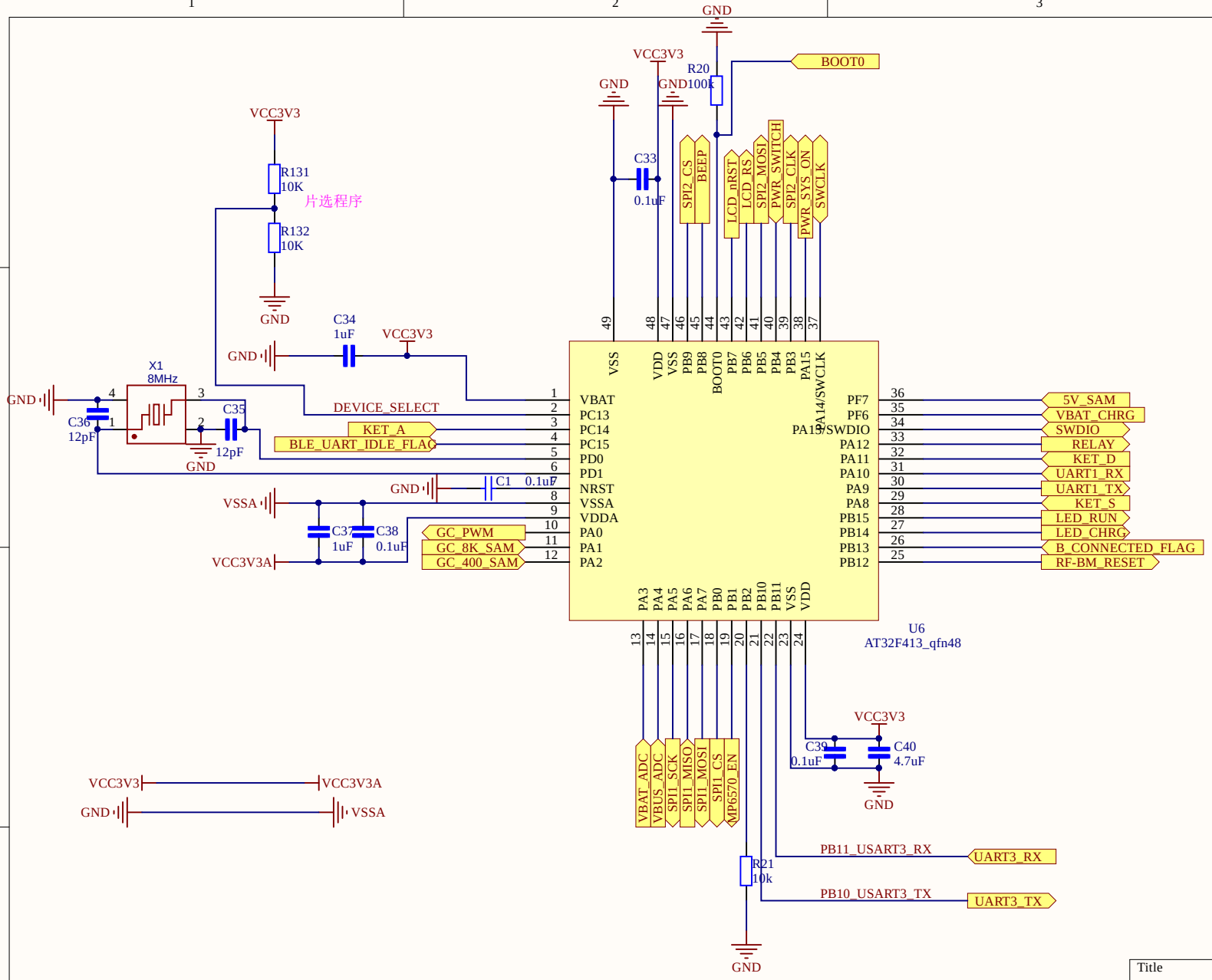


| Title | | |
|---|---|---|
| Size A4 | Number | Revision |
| Date: 2024/9/24 | | Sheet of |
| File: Z:\pcb工具\..\[2]mcu.SchDoc | | Drawn By: |

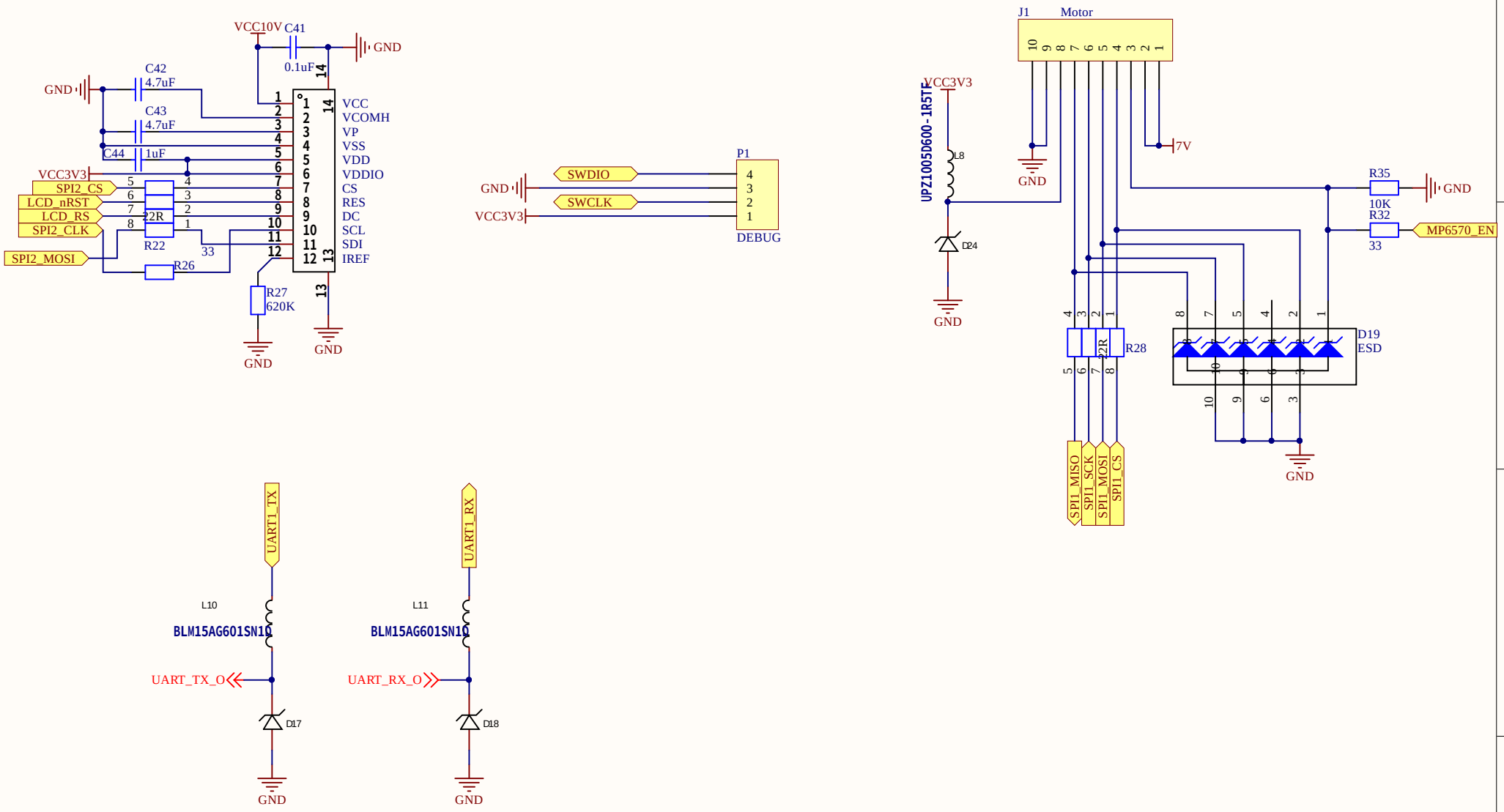


| Title | | |
|---|---|---|
| Size A4 | Number | Revision |
| Date: 2024/9/24 | | Sheet of |
| File: Z:\pcb工具\..\[3]comm.SchDoc | | Drawn By: |

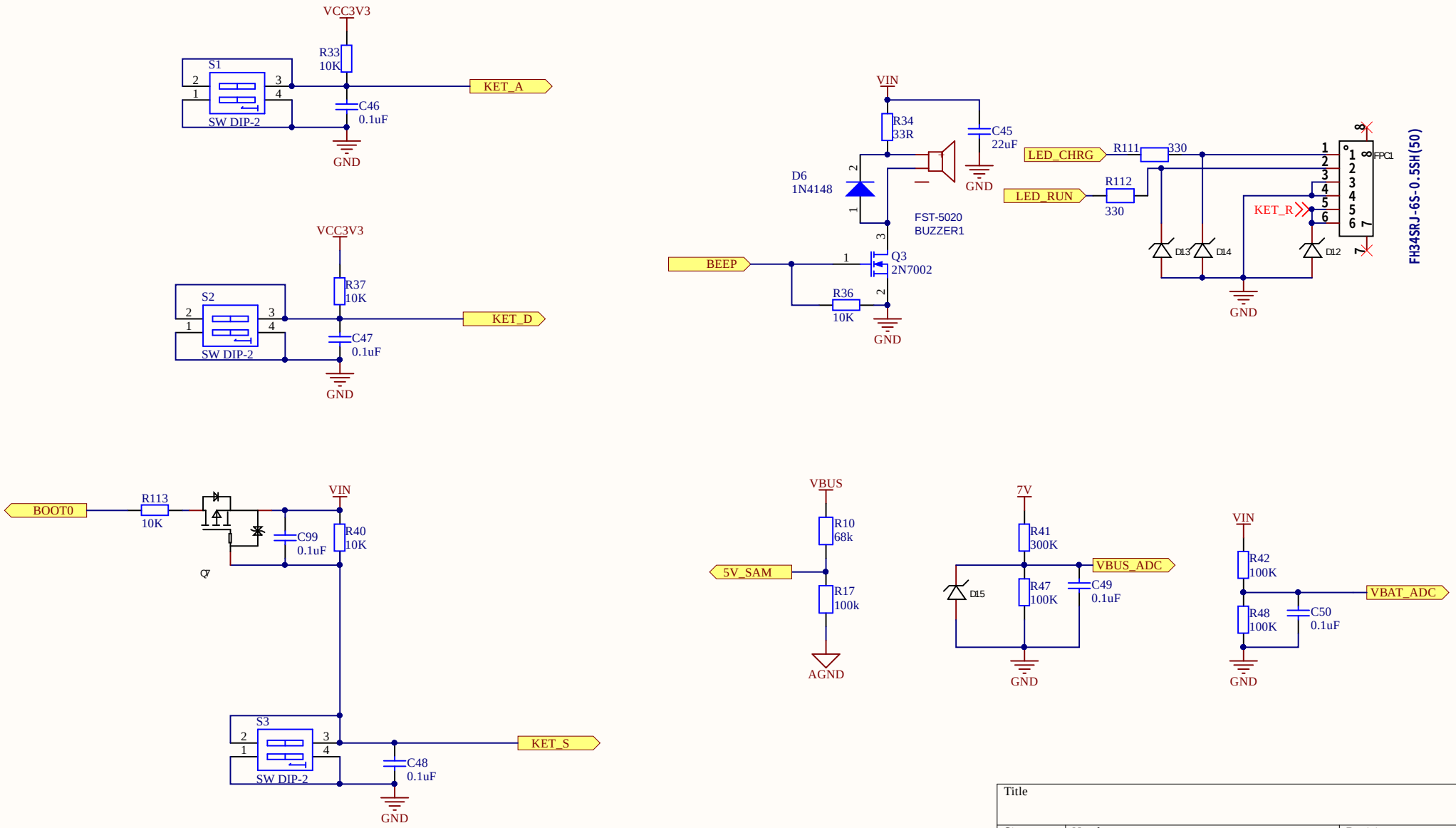


| Title | | |
|---|---|---|
| Size A4 | Number | Revision |
| Date: 2024/9/24 | | Sheet of |
| File: Z:\pcb工具\..\[4]gpio.SchDoc | | Drawn By: |

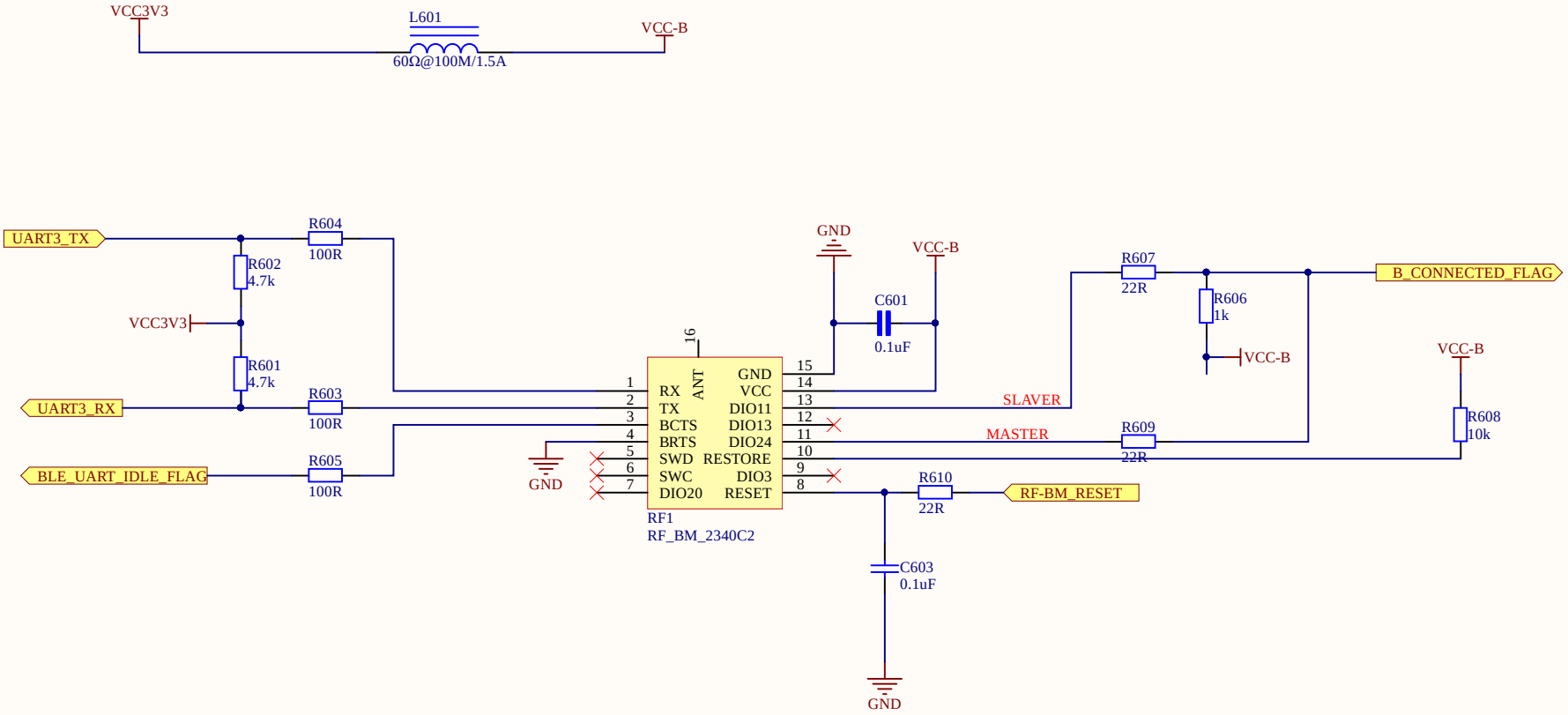


| | | | |
|---|---|---|---|
| Title: 牙根尖定位仪原理图 | | Specification: 11-2 AL-1 | |
| Number: | Size: A4 | Company: 成都萨尼医疗器械有限公司 | |
| Revision: Ver1.0 | Date: | | |

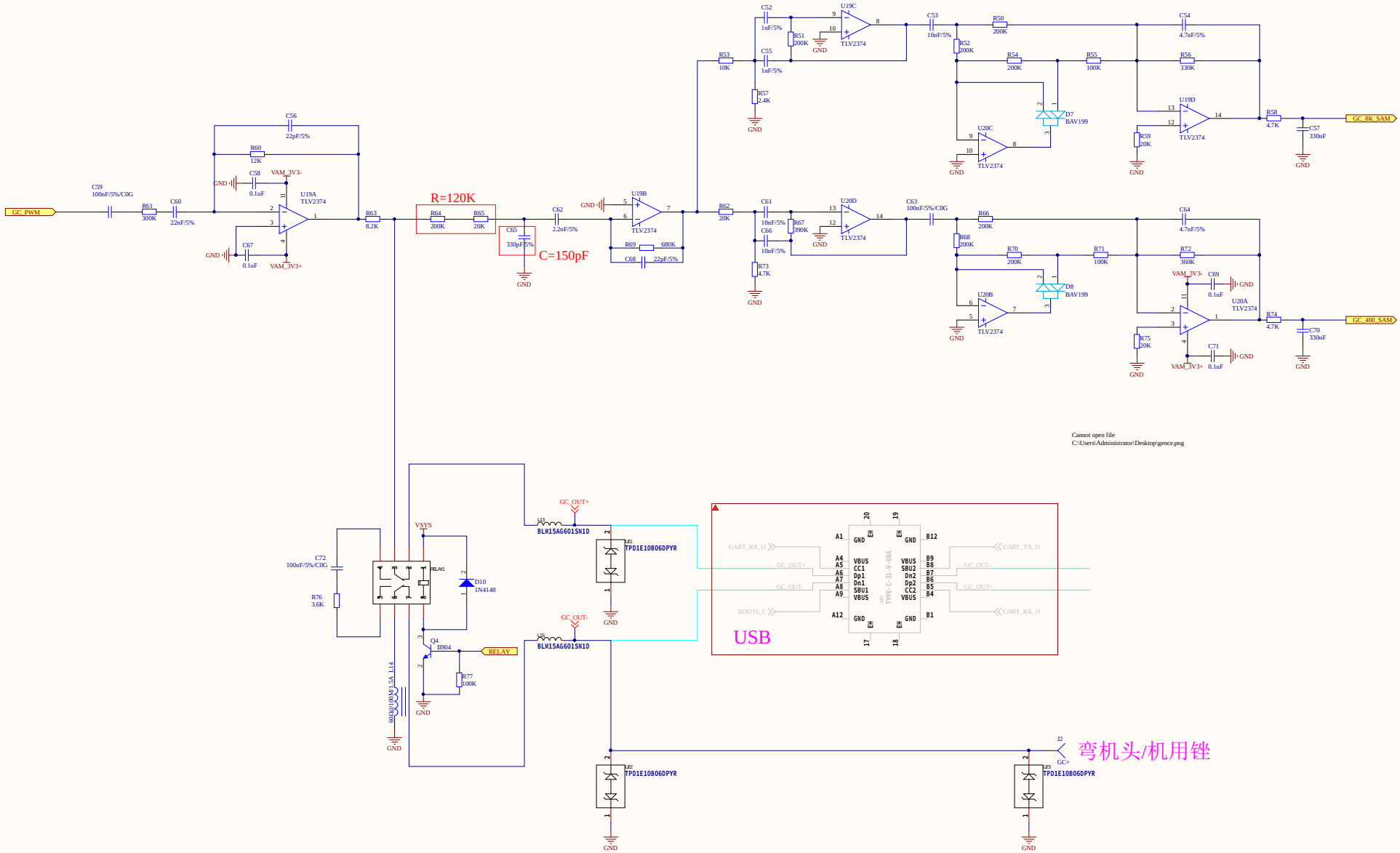


| | | | |
|---|---|---|---|
| Title * | | | |
| Size: A2 | Number:* | Revision:* | |
| Date: 2024/9/24 | Time: 13:11:24 | Sheet* of * | |
| File: Z:\pcb工具\A无刷马达\A一合一改及无刷单马达全功能版本 V1.7\原理图\Root-amp-1.8.SchDoc | | | |