**INTERNSHIP PROJECT REPORT**

**ON**

# A STUDY ON MAINTENANCE OF PERMANENT WAY

Submitted in partial fulfilment of the requirement for the award of the Degree

**BACHELOR OF TECHNOLOGY**

**IN**

**CIVIL ENGINEERING**

Submitted by


| | |
|---|---|
| **GUDDETI NIKHIL KUMAR** | **(19501A0117)** |
| **KANNA HRUTHIK** | **(19501A0120)** |
| **MODUGU SWARNA JATHIN** | **(19501A0128)** |
| **PRAGADA MANIKANTA** | **(19501A0136)** |
| **TIRUMALASETTI MOHAN** | **(19501A0142)** |

**DEPARTMENT OF CIVIL ENGINEERING**

**PRASAD V. POTLURI SIDDHARTHA INSTITUTE OF TECHNOLOGY**

**(AUTONOMOUS)**

**Affiliated to JNTU Kakinada, Approved by AICTE, New Delhi**

**Accredited by NBA & NAAC A+, ISO 9001:2015 Certified Institution**

**KANURU, VIJAYAWADA-520007**


**2022-2023**

**PRASAD V. POTLURI SIDDHARTHA INSTITUTE OF TECHNOLOGY**

**(Autonomous)**

**DEPARTMENT OF CIVIL ENGINEERING**

**KANURU, VIJAYAWADA-520007**

## CERTIFICATE

This is to certify that the Internship project entitled "**A STUDY ON MAINTENANCE OF PERMANENT WAY"** is a record of bonafide work carried out by **GUDDETI NIKHIL KUMAR (19501A0117) ,KANNA HRUTHIK (19501A0120) ,MODUGU SWARNA JATHIN(19501A0128) ,PRAGADA MANIKANTA (19501A0136) ,TIRUMALASETTI MOHAN (19501A0142)** for the award of **BACHELOR OF TECHNOLOGY** degree in **CIVIL ENGINEERING** at Prasad V. Potluri Siddhartha Institute of Technology is a record of student's work carried out under our supervision and guidance during academic year 2022-2023.

**Dr. K. SHYAM PRAKASH**
**Internship Co- Ordinator**

**Dr. K. RAMESH**
**Head of the Department**

## DECLARATION

This is to certify that the Internship project entitled **"A Study on Maintenance of Permanent Way"** written and submitted by us is an original work done under the guidance of **Dr. K. Shyam Prakash** is submitted in partial fulfilment of the requirements for the award of the Degree of Bachelor of Technology in Civil Engineering. This is a record of bonafide work carried out by us and the results embodied in this Internship Project Report have not been reproduced and copied from any source.

**INTERNSHIP ASSOCIATES**:

| | |
|---|---|
| **GUDDETI NIKHIL KUMAR** | **(19501A0117)** |
| **KANNA HRUTHIK** | **(19501A0120)** |
| **MODUGU SWARNA JATHIN** | **(19501A0128)** |
| **PRAGADA MANIKANTA** | **(19501A0136)** |
| **TIRUMALASETTI MOHAN** | **(19501A0142)** |

## ACKNOWLEDGEMENT

The satisfaction and euphoria on the successful completion of any task would be incomplete without the mention of the people who made it possible, whose constant guidance and encouragement crowned our effort with success.

We profound appreciation to our principal would like to express us **Dr. K. Sivaji Babu**, **Principal, PVP Siddhartha Institute of Technology** for extending his official support for the completion of our Internship Project.

We express our thanks to **Dr. K. Ramesh, Head & Professor Civil Engineering Department**, for all the facilities provided to successfully complete our internship program.

We are deeply indebted to our Project for the motivation, guidance, tutelage and patience throughout this Internship project work. We appreciate his broad range of expertise and attention to detail, as well as the constant encouragement he has given to us over the years.

In our association with all the above persons, we experienced not only their depth of knowledge but also affection towards us. Finally, we take this opportunity to thank one and all of our **Civil Engineering Teaching & Non-Teaching Staff** for their able cooperation both academic and non-academic all throughout our four years. We shall remember all our staff as long as our memory lives.

**INTERNSHIP ASSOCIATES**:

| | |
|---|---|
| **GUDDETI NIKHIL KUMAR** | **(19501A0117)** |
| **KANNA HRUTHIK** | **(19501A0120)** |
| **MODUGU SWARNA JATHIN** | **(19501A0128)** |
| **PRAGADA MANIKANTA** | **(19501A0136)** |
| **TIRUMALASETTI MOHAN** | **(19501A0142)** |

**ABSTRACT**

The Vijayawada South Central Railway has the wide range of area and various kinds of facilities that they provide to the population of the city. This was operated by the Indian Railways

Vijayawada Division is the second largest Division of South-Central Railway comprising 1,068.194 Route Kilometres and 156 Railway Stations.

Vijayawada is one of the most important junctions on Indian Railways, strategically located at the tri-junction of Chennai-New Delhi North-South route and Chennai-Howrah East-Coast route. The rail routes leading towards Guntur/Guntakal and Machilipatnam/Narsapur also join at Vijayawada.

The Division caters to two important Ports on the East Coast - Krishnapatnam & Kakinada. It also caters to major industrial clusters located around Krishnapatnam and Kakinada Ports apart from serving the vibrant agricultural economy of Coastal Andhra.

The present Vijayawada Division came into existence when South Central Railway was formed in 1966 when Hubli and Vijayawada Divisions of Southern Railway and Sholapur and Secunderabad Divisions of Central Railway were carved out and merged into the new Railway Zone.

**CONTENT**


**Abstract** **PAGE NO**

**CHAPTER – 1 INTRODUCTION**

1.1 PERMANENT WAY 1

1.2 HISTORY 2

**CHAPTER – 2**

**2.1 RAILS** 3

**2.1.1 TYPES OF RAILS** 3

2.1.1.1 DOUBLE HEADED RAILS 3

2.1.1.2 BULL HEADED RAILS 4

2.1.1.3 FLAT FOOTED RAILS 4-5

**2.2 RAIL JOINTS** 5

**2.2.1 TYPES OF RAIL JOINTS** 6

2.2.1.1 SQUARE JOINT 6

2.2.1.2 STAGGERED JOINT 6

2.2.1.3 SUSPENDED JOINT 7

2.2.1.4 SUPPORTED JOINT 7

2.2.1.5 BRIDGE JOINT 7-8

**2.3 SLEEPERS** 8

**2.3.1 TYPES OF SLEEPERS** 9

2.3.1.1 WOODEN SLEEPER 9-10

2.3.1.2 METAL SLEEPER 10-11

2.3.1.3 CONCRETE SLEEPER 11-12

**2.4 BALLAST** 12

**2.4.1 TYPES OF BALLAST** 13

2.4.1.1 BROKEN STONE 13

2.4.1.2 GRAVEL 13

2.4.1.3 SAND 13

2.4.1.4 ASH & CLINDERS 14

2.4.1.5 KANKAR 14

2.4.1.6 MOORUM 14

2.4.1.7 BLAST FURNANCE SLAG 14

2.4.1.8 BRICK BALLAST 14

2.4.1.9 SELECTED EARTH 14

**CHAPTER – 3**

3.1 IOH & POH 15-16

**CHAPTER – 4**

4.1 DIESEL ENGINE 17-18

**CHAPTER – 5**

5.1 COACHES 19

5.1.1 1AC COACHES 19

5.1.2 2AC COACHES 20

5.1.3 3AC COACHES 20

5.1.4 SLEEPER CLASS 21

5.1.5 AC CHAIR CAR 21-22

5.1.6 2ND SEATER 22

**CHAPTER – 6**

6.1 RAIL TEST 23-24

6.2 EQUIPMENT & WORKING PRINCIPLE OF USFD 25

**CHAPTER – 7**

7.1 DESIGN OF COACH & ITS SAFETY MEASURES 26

**CHAPTER – 8**

8.1 MAINTENANCE OF PERMANENT WAY 27

**CHAPTER – 9**

9.1 CONCLUSION 28

**REFERENCES** 29

## LIST OF FIGURES :


| | | |
|---|---|---|
| 1.1 | PERMANENT WAY | 1 |
| 2.1 | DOUBLE HEADED RAIL | 3 |
| 2.2 | BULL HEADED RAIL | 4 |
| 2.3 | FLAT FOOTED RAIL | 5 |
| 2.4 | SQUARE JOINT | 6 |
| 2.5 | STAGGERED JOINT IN CURVED TRACK | 6 |
| 2.6 | SUSPENDED JOINT | 7 |
| 2.7 | SUPPORTED JOINT | 7 |
| 2.8 | BRIDGE JOINT ON METAL FLAT | 8 |
| 2.9 | BRIDGE JOINT ON BRIDGE PLATE | 8 |
| 2.10 | WOODEN SLEEPER | 9 |
| 2.11 | METAL SLEEPER | 10 |
| 2.12 | CONCRETE SLEEPER | 11 |
| 2.13 | MONO BLOCK CONCRETE SLEEPER | 12 |
| 2.14 | TWIN BLOCK CONCRETE SLEEPER | 12 |
| 3.1 | IOH & POH | 15 |
| 3.2 | RAIL FIVE DIGITAL CODE | 16 |
| 4.1 | DIESEL ENGINE RAIL | 17 |
| 5.1 | 1AC COACHES | 19 |
| 5.2 | 3AC COACHES | 20 |
| 5.3 | SLEEPER CLASS | 21 |
| 5.4 | AC CHAIR CAR | 22 |
| 6.1 | TWO RAIL TEST MACHINE | 23 |
| 6.2 | SINGLE RAIL TEST MACHINE | 24 |
| 7.1 | DESIGN OF COACHES | 26 |

# CHAPTER 1

# PERMANENT WAY

# 1.INTRODUCTION

## 1.1 PERMANENT WAY

The combination of rails, fixed on sleepers and resting on ballast and formation forming a railway track is known as permanent way.

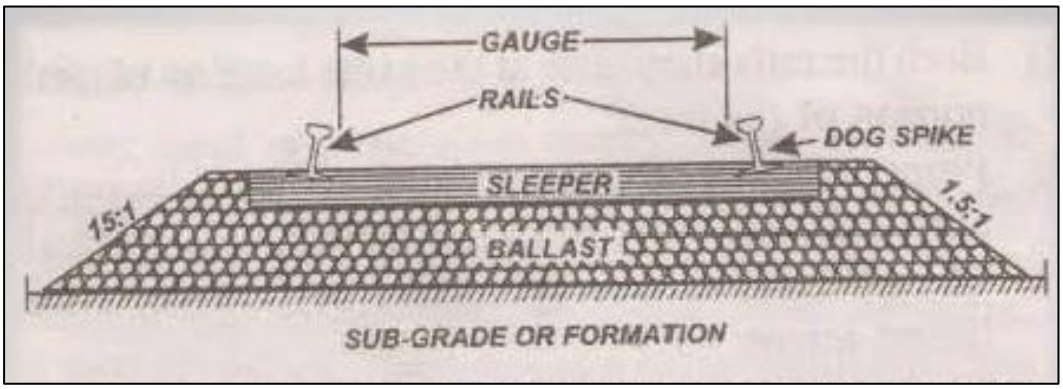


Fig:1.1 permanent way

The rails act as girders and transmit the wheel load to the sleepers. The sleepers hold the rails in position and transmit load from rails to ballast. The ballast holds the sleepers in position and transmit load from sleepers to formation or sub grade.

In permanent way, the rails are joined in series and each joint requires two fish plates and four fish bolts. Rails are fixed to sleepers by different fastenings

## 1.2 HISTORY:

The earliest tracks consisted of wooden rails on transverse wooden sleepers, which helped maintain the spacing of the rails. Various developments followed, with cast iron plates laid on top of the wooden rails and later wrought iron plates or wrought iron angle plates (angle iron as L-shaped plate rails). Rails were also individually fixed to rows of stone blocks, without any cross ties to maintain correct separation. This system also led to problems, as the blocks could individually move. The first version of Isambard Kingdom Brunel's 7 ft (2,134 mm) broad gauge system used rails laid on longitudinal sleepers whose rail gauge and elevation were pinned down by being tied to piles (conceptually akin to a pile bridge), but this arrangement was expensive and Brunel soon replaced it with what became the classic broad gauge track, in which the piles were forgone and transoms, similar to sleepers, maintained the rail gauge. Today, most rail track uses the standard system of rail and sleepers; ladder track is used in a few applications.

Developments in manufacturing technologies has led to changes to the design, manufacture and installation of rails, sleepers and the means of attachments. Cast iron rails, 4 feet (1.22 m) long, began to be used in the 1790s and by 1820, 15 feet (4.57 m) long wrought iron rails were in use. The first steel rails were made in 1857 and standard rail lengths increased over time from 30 to 60 feet (9.14 to 18.29 m). Rails were typically specified by units of weight per linear length and these also increased. Railway sleepers were traditionally made of Creosote-treated hardwoods and this continued through to modern times. Continuous welded rail was introduced into Britain in the mid-1960s, and this was followed by the introduction of concrete sleepers.

# CHAPTER 2

# COMPONENT PARTS OF PERMANENT WAY

## 2.0 COMPONENT PARTS OF PERMANENT WAY

- Rails
- Rail joints
- Sleepers
- Ballast

## 2.1 RAILS:

The rails on the track can be considered as steel girders are made of high carbon steel to carry axel loads and withstand wear and tear.

### 2.1.1 Types of rails:

The rails used in the construction of railway track are of following types:

1. Double headed rails (D.H. Rails)

2. Bull headed rails (B.H. Rails)

3. Flat footed rails (F.F. Rails)

#### 2.1.1.1 Double headed rails:

The rail sections, whose foot and head are of same dimensions, are called Double headed or Dumb-bell rails. In the beginning, these rails were widely used in the railway track. The idea behind using these rails was that when the head had worn out due to rubbing action of wheels, the rails could be inverted and reused. But by experience it was found that their foot could not be used as running surface because it also got corrugated under the impact of wheel loads. These are not used Indian

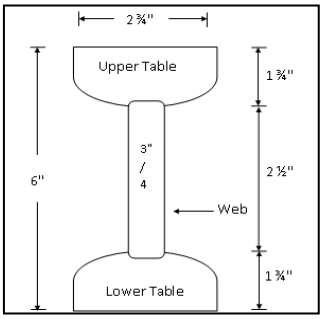


Fig:2.1 Double headed rails

### 2.1.1.2 Bull headed rails:

The rail section whose head dimensions are more than that of their foot are called bull headed rails. In this type of rail, the head is made little thicker and stronger than the lower part by adding more metal to it. These rails also require chairs for holding them in position. Bull headed rails are especially used for making points and crossings.

Merits**:**

- B.H. Rails keep better alignment and provide more smoother and stronger track.
- These rails provide longer life to wooden sleepers and greater stability to the track.
- These rails are easily removed from sleepers and hence renewal of track is easy.

Demerits**:**

- B.H. rails require additional cost of iron chairs.
- These require heavy maintenance cost,  less strength, stiffness

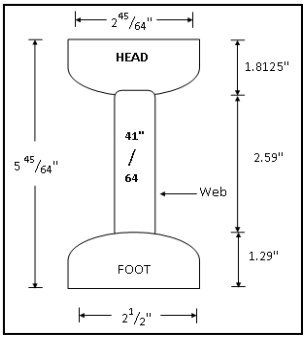


Fig:2.2 Bull Headed rail

### 2.1.1.3 Flat footed rails:

The rail sections having their foot rolled to flat are called flat footed or Vignole's rails. This type of rail was invented by Charles Vignole in 1836. It was initially thought that the flat-footed rails could by fixed directly to wooden sleepers and would eliminate chairs and keys required for the B.H. rails. But later, it was observed that heavy train loads caused the foot of the rail to sink into the sleepers and making the spikes loose. To remove this defect, steel bearing plates were used in between flat-footed rails and the wooden sleeper. These rails are most used in India.

Merits:

- F.F. rails have more strength and stiffness.
- No chairs are required for holding them in position.
- These rails require a smaller number of fastenings.
- The maintenance cost of track formed with F.F. rails is less.

Demerits:

- The fittings get loosened more frequently.
- These rails are not easily removed and hence renewal of track becomes difficult.
- It is difficult to manufacture points and crossings by using these rails.

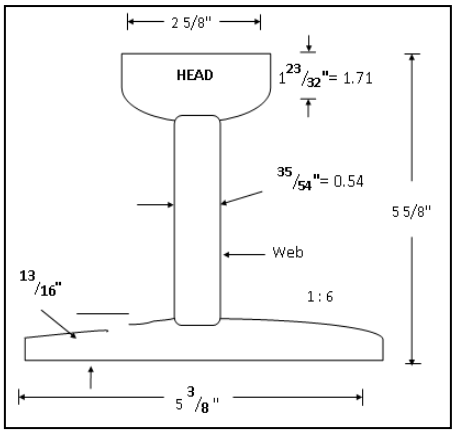


Fig:2. 3 flat footed rails

## 2.2 RAIL JOINTS:

Rail joint is the joint made between two rails joined together with two fish plates and four fish bolts to form a expansion gap of 1.5 to 3 mm.

Rail joint is the weakest part in the railway track.

### 2.2.1 Types of rail joints:

Depending upon the position of joints and sleepers, rail joints are classified as

**a) According to position of joints**

- Square joints
- Staggered joints

**2.2.1.1 Square Joint:** When a joint in one rail is exactly opposite to the joint in the parallel rail, is called a square joint.

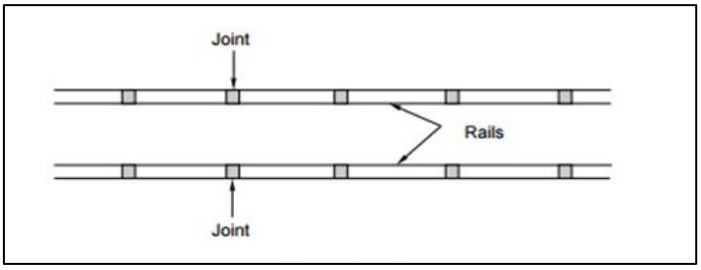


Fig: 2.4 square joint

**2.2.1.2 Staggered Joint:** When a joint in one rail is exactly opposite to the centre of the parallel rail, is called staggered .These staggered joints are used in curves.

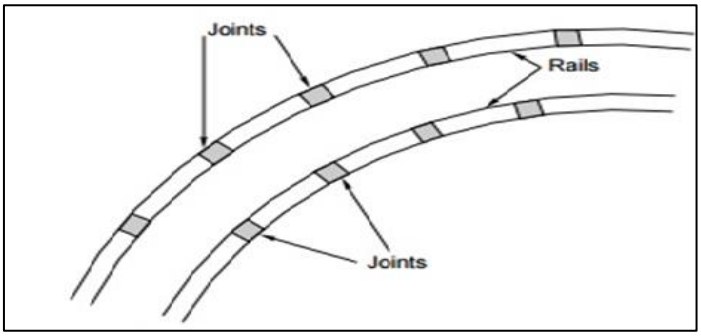


Fig :2.5 Staggered joint in curved track

**b) According to the position of sleepers**

- Suspended joint
- Supported joint
- Bridge joint

### 2.2.1.3 Suspended joint:

When the rail joints is placed at the centre of two consecutive sleepers is known as suspended joint.

The load coming from the rails is equally distributed on two sleepers.

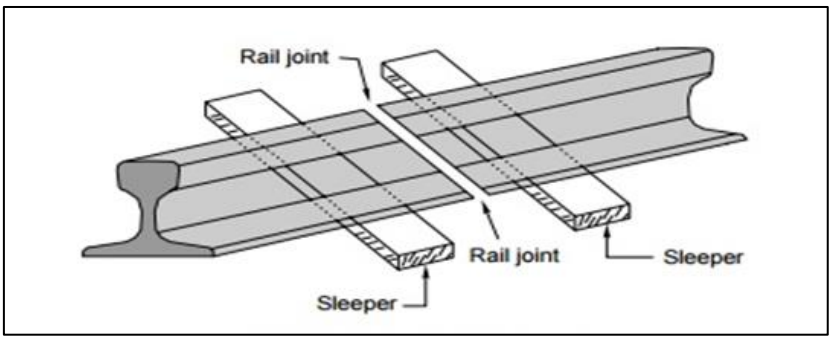


Fig:2.6 Suspended joint

### 2.2.1.4 Supported joint:

When the rail joint is placed exactly over the sleeper is called supported joint. With heavy axle loads sleepers get worn out quickly.

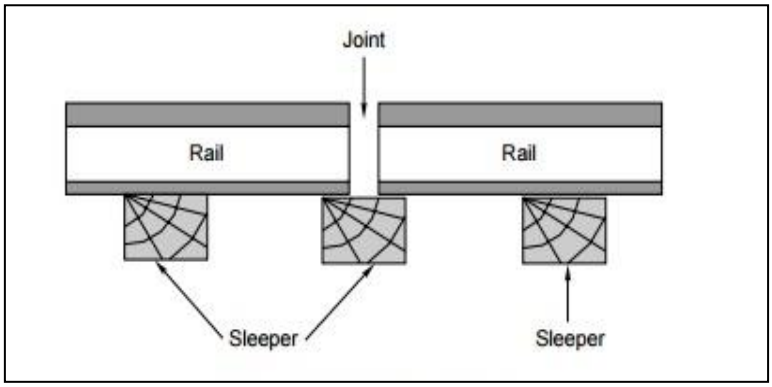


Fig:2.7 Supported joint

### 2.2.1.5 Bridge joint:

When the rail joint is supported over a metal plate (flat or corrugated) serving as a bridge between adjacent sleepers is called a bridge joint.

It is found quite unsuitable and not used in Indian Railways.

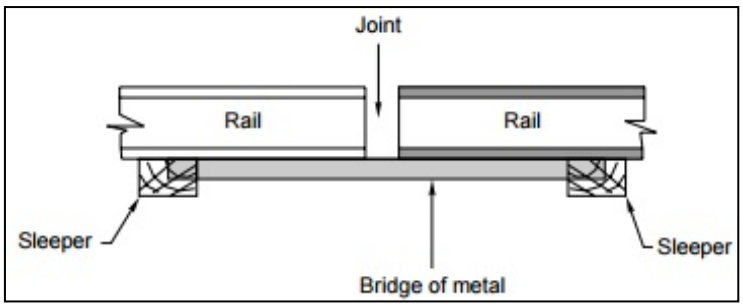


Fig:2.8 Bridge joint on metal flat

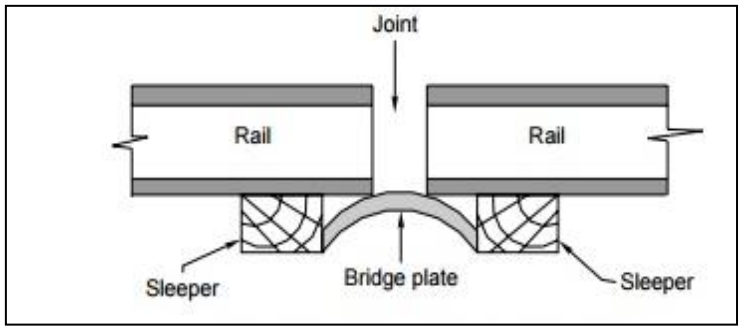


Fig:2.9 Bridge joint on bridge plate

**2.3 SLEEPERS:**

Sleepers are transverse members of the track placed below the rails to support and fix them in position.

### 2.3.1 Types of sleepers:

1. Wooden sleepers.
2. Metal sleepers (cast iron sleepers & steel sleepers)
3. Concrete sleepers

#### 2.3.1.1 Wooden Sleepers:

These are sleepers made of wood. Wooden sleepers are used since olden days. These are still widely using in some western countries. Either hardwood or softwood can be used to make wooden sleepers. However, hardwood sleepers made of oak, jarrah, teakwood are more famous.

Fig : 2.10 wooden sleeper

**Advantages:**

- Wood sleepers are cheaper than others and easy to manufacture.
- They are light in weight so, they can be easily transported and handled while installing.
- Fasteners can be easily installed to wooden sleepers. They are good insulators so, rails are well protected.

- Any type of gauge can be maintained by wooden sleepers.
- They are suitable for all types of rail section.
- They are well suitable for tracks in coastal areas.

**Disadvantages:**

- Life of wooden sleepers is very less compared to others.
- Weak against fire.
- Easily affected by humidity which will cause dry rot, wet rot etc.
- Vermin attack can be possible if it is not properly treated.
- Poor creep resistance.
- Good Attention is required even after laying.

### 2.3.1.2 Metal sleeper:

The main reason to use metal sleepers replacing wooden sleepers are because of insufficiency of wooden sleepers. Metal sleepers use widely in the modern construction of railway tracks. The main role of sleepers is to transfer load from rails to the ballast. The Metal sleepers are of cast iron and steel. These sleepers fix vertical to each other. It fixes throughout the track. The main work of sleepers is to hold rails in a strong position. It receives the loads from rails and spread to ballast and sub-grades.

Fig : 2.11 Metal sleeper

**Advantages**:

- These sleepers are light in weight and requires less fastenings.
- The gauges can be easily maintained and adjusted
- Their scrap value more than the wooden sleepers
- The life of steel sleepers is more than wooden sleepers.

**Disadvantages:**

- The initial cost of these sleepers is more than wooden sleepers.
- Steel sleepers are liable to corrosion
- They are not suitable for all types of ballast.

**2.3.1.3 Concrete sleepers:**

Concrete sleepers are manufactured by concrete with internal reinforcement. Concrete sleepers used in many countries due to its high stability and small maintenance. These are more suitable for high-speed rails. Most of the concrete sleepers are made from pre-stressed concrete in which internal tension is induced into the sleeper before casting. Hence, the sleeper withstands well against high external pressure.

Fig:2.12 concrete sleeper

**Advantages:**

- Concrete sleepers have long life, generally 40to 60 years.
- These are free from natural decay and attack by insects etc.
- These sleepers require less fittings.

- Track circuiting is possible in these sleepers.
- It is economical as
- Easy to manufacture.
- It is not susceptible to vermin attack
- It is not susceptible to fire
- Good for track circuited areas

**Disadvantages:**

- They are liable to crack due to creep and shrinkage.
- Due to heavy weight, handling and transportation of these sleepers are difficult.
- If not handled properly, the chance of breaking is more.
- The renewal of track laid with these sleepers is difficult.
- The scrap value is nil.

Fig:2.13 mono block concrete sleeper

Fig:2.14 Twin block concrete sleeper

## 2.4 BALLAST:

Ballast is the granular material usually broken stone or any other suitable material which is spread on the top of railway formation and around the sleepers.

### 2.4.1 Types of ballast:

- Broken stone.
- Gravel
- Sand
- Ashes or cinders
- Kankar
- Moorum
- Blast furnace slag
- Brick ballast
- Selected earth

**2.4.1.1 Broken stone**: This is the best type of ballast as it possesses all the characteristics of a good ballast. It holds the track to correct alignment and gradient due to its high interlocking action. The stones which are non-porous, hard and do not flake on breaking should be used. Igneous rocks such as granite, quartzite and trap make excellent ballast. This type of ballast is used for high-speed tracks.

**2.4.1.2 Gravel**: Gravel is the second-best material for ballast. This is obtained either from riverbeds or from gravel pits and has smooth rounded fragments. Gravel obtained from pits usually contains earth which should be removed by washing. Gravel obtained from riverbeds is screened and required size gravel is used. Larger size gravels are broken into required size. Round edges gravels are broken to increase their interlocking action.

**2.4.1.3 Sand:** Sand is reasonably a good material for the ballast. Coarse sand is generally preferred to fine sand for ballast. This type of ballast is suitable for packing pot sleepers. It is used only on unimportant tracks.

**2.4.1.4 Ashes or Cinders:** It is cheaper and drains well. It powders easily and corrodes steel rails and sleepers. It is used in emergencies. These are waste products obtained from steam locomotives.

**2.4.1.5 Kankar:** It is soft and powders easily. Suitable for light traffic.

**2.4.1.6 Moorum:** It powders easily and have good drainage property. It is cheaper and easily available. It is used in newly constructed tracks to form a base for stone ballast.

**2.4.1.7 Blast furnace slag**: Strong and drains well. It powders easily.

**2.4.1.8 Brick ballast:** Over brunt brick bats are used as a ballast. It powders easily and makes the track dusty. When stone ballast is not available brick ballast is used as a substitute.

**2.4.1.9 Selected earth**: It is used in newly laid tracks and sidings.

# CHAPTER 3

# INTERMEDIATE OVERHAULING (IOH) & PERIODIC OVERHAULING (POH)

### 3.1 Intermediate overhauling (IOH) & periodic overhauling (POH):

The intermediate overhauling (IOH) is done every nine months in the nominated Coaching Depots and Periodical Overhauling (POH) is done every 18 months in various Workshops of the Southern Railway.

The tables on the back side of coaches are called as POH. POH means time to time maintenance of the coaches.

ICF(Integral coach factory) coaches in blue colour. The life span of the ICF coaches is 25 years .The life span of LHB(Linke Hofmann Busch) coaches is 35 years.

Maintenance of each coach must be done for every 18 months. Under maintenance axial wheel seats, charging slots etc. If you want to know the manufacturing year of any coach then , the coach outside they represent the five digits code.

Fig : 3.1 IOH and POH

In that the first two numbers are the manufacturing year of the coach.

If any coach older than 20 years, then it must be used as the superfast express they were used for only less hours of travelling places

Fig : 3.2 rail five digital code

**SUSPENSION IN LBH COACHES**

- It contains two set of axiels with four wheels each which has primary suspension in wheels and secondary suspension on axial and middle.
- To avoid damages to train and tracks because of loads and forces they use suspensions.

# CHAPTER 4

# DIESEL ENGINE

## 4.1 DIESEL ENGINE:

It is an electric locomotive

It uses two stroke diesel engine as primary source of power . Which has the capacity of tank is 50000 liters

Usually we use 16 cylinders (V-16)

But although it ranges from 12 cylinders (V-12) to 18 cylinders (V-18)

Usually, cylinders are arranged in V shape format

Fig: 4.1 Diesel engine rail

- At first the engine produces a power with the help of generator then it produces the alternating current, and the AC current is send to transformer . So, the power generated is fluctuating it cannot directly feed to the traction motors . So, rectifier is used to convert the AC current to DC current so then after the DC current is directly converted to the three-phase alternating current then it gets into the traction motors the diesel engine is cooled by the radiator and the heat generated by the transformers , rectifiers , inverters , is disputed by the blowers .

# CHAPTER 5

# COACHES

## 5.1 Coaches

Indian Railways offers various travel classes on their coaches. Depending upon their travel class, the passenger cars feature different seating arrangements or berths subject to availability.

### 5.1.1 AC first class or 1 AC Coach:

The most luxurious and expensive class of Indian Railways, with fares almost at par with airfares. There are eight cabins (including four or five coupes) in full AC first class coach and three cabins (including one coupe) in the half AC first class coach.

1AC - 24 seats ( four cabins for family and four cabins for couples)

Exterior

Compartment

Couple

Fig: 5.1 1 AC coaches

**5.1.2 AC two tier or 2A** :

These air-conditioned coaches have sleeping berths across eight bays. Berths are usually arranged in two tiers in bays of six: four across the width of the coach and two lengthwise across the corridor, with curtains along the corridor. Bedding is included in the fare. A coach can carry 48 (full coach) or 20 passengers (half coach).

**5.1.3 AC three tier or 3A**:

Air-conditioned coaches with 64 sleeping berths. Berths are like 2A, but with three tiers across the width and two lengthwise for eight bays of eight. They are slightly less well-appointed, usually with no reading lights or curtains. Bedding is included in the fare.

Exterior

Interior

Fig: 5.2 3A coaches

### 5.1.4 Sleeper class:

- The sleeper class is the most common coach on IR, with ten or more SL coaches attached to a train rake. Each coach has 9 bays. There are sleeping coaches with 6 (3+3) berths across the width and 2 (1+1) lengthwise in every bay, without air-conditioning. They carry 72 passengers per coach (Increased to 80 in some of the trains like Telangana Express - 12724). There are 4 shared toilets per coach, 2 (1+1) on each end.
- Sleeper classes - 864 seats ( 12 compartments and each compartment has 72 seats)

Exterior (LHB Rake)

Interior (ICF Rake)

fig:5.3 sleeper class

### 5.1.5 5AC chair car:

- An air-conditioned coach with five seats in a row, used for intercity day travel. Old model coach is in 3+3 type configuration new model coaches are in 3+2 type configuration.
- Chair Car - only for morning trains seating with AC (72 seats for each compartment)

Exterior (Shatabdi)

Interior (Shatabdi)

Interior (Jan Shatabdi)

Fig : 5.4 AC Chair Car

**5.1.6 Second seater**:

- Like CC, without air-conditioning.
- Second class (2S) – 108 seats for each compartment

# CHAPTER 6

# RAIL TEST

## 6.1 RAIL TEST:

- USFD – Ultrasonic Flaw Detection
- It is conducted for the two different rails they are :

1. For single rail
2. For two rails

- It is used to detect the defect in the two rail. By using ultrasonic rays.
- It changes with the factors of the climatic conditions. It is represented in the graph form
- Internal defects were detected by the three sensors ( angular probe )
- It emits the ultrasonic sound waves and then it converts the waves into the electric sound signals

Fig : 6.1 Two rail test machine

- We mark the defects on the defected area with pen etc.

Fig : 6.2 single rail test machine

## 6.2 EQUIPMENT & WORKING PRINCIPLE OF ULTRASONIC RAIL TESTING

**Ultrasonic rail testing equipment:**

In Indian railways ultrasonic rail flaw detection is carried out with the help of two different types of equipment via single rail tester and double rail tester. The single rail tester has been utilised on the Indian Railways for over 35 years and the double rail tester is of a relatively recent origin.

**Working principle:**

We started the rail testing machine and moving the signal rail tester on the track where defects must be detected.

Initially the total equipment is placed on the track such that the side probe frames are aligned properly to the track. The couplet is on such that it wet total rail head.

**Conclusion:**

- A 5mm deep layers from rail table can be tested as it falls in the dead zone of the probe.
- Ultrasonic beam is directed towards the flaw in any angle.
- Similarly, if the crack is propagating vertically downwards or upward, detection is possible.
- Cracks less than 0.8mm size can be detected.

Hence this process is effective and can be implemented in railways for proper detection of cracks in rail tracks.

# CHAPTER 7

# DESIGN OF COACH AND ITS SAFETY MEASURES

## 7.1 DESIGN OF COACH AND ITS SAFETY MEASURES

Mainly the design of coach is dependent upon the block where it consists of washroom place , entry and exit points , and finally seating seats .

The coach's safety was for up to the seating place only and onto not for the entrance and exit places of coaches including the washroom also.

Fig : 7.1 Design of coaches

The bogie has supported on the suspension where it takes load and releases slowly to avoid the damage for the coaches and for the passengers also.

# CHAPTER 8

# MAINTENANCE OF PERMANENT WAY

## 8.1 MAINTENANCE OF PERMANENT WAY

### 8.1.1 Regular Track Maintenance:

- Examination of rails, sleepers and fastenings.
- Squaring of sleepers.
- Slewing of track to correct alignment.
- Gauging.
- Packing of sleepers.
- Repacking of joint sleepers.
- Boxing of ballast section and tidying
- Ballasting where there is shortage of ballast.
- Heaping up of ballast in the tamping zone, to ensure effective packing.
- Making up of low cess.
- Cleaning of pumping joints and providing additional clean ballast, where necessary.
- Attending to Hogged joints before tamping.
- Tightening of all fittings and fastenings like fish bolts and keys, splitting of cotters, and replacement of worn-out fittings.
- Renewing broken and damaged sleepers.
- Squaring of sleepers and spacing adjustment; regauging to be done as necessary.
- Adjusting creep and expansion gap in rails.
- Examination of rails for cracks etc.
- Realigning of curves which are badly out of alignment.
- Clearing of ballast on sleepers to make them visible to the operator.

# CHAPTER 9

# CONCLUSION

## 9.1 CONCLUSION :

A procedure for design of an embedded rail construction which includes numerical modelling and dynamic analysis, laboratory testing and optimization of the railway structure has been presented.

Determination of mechanical properties of the embedded rail construction for a high-speed train was formulated as an optimization problem which has been solved using a multipoint approximation method.

Results of the optimization have shown that the numerical optimization can effectively be used in the design of the railway structures.

**REFERENCES :**


1. https://civilwale.com/railway-sleepers-functions-types-advantages-and-disadvantages/
2. https://en.wikipedia.org/wiki/History_of_the_railway_track#:~:text=The%20railway%20track%20or%20permanent,ordinary%20trains%20of%20a%20railway
3. https://en.wikipedia.org/wiki/Diesel_Loco_Shed,_Guntakal#/media/File:GTL_WDM3D.jpg
4. https://en.wikipedia.org/wiki/Indian_Railways_coaching_stock


## References

### *Limiting references*

*This place does not cover:*

| | |
|---|---|
| Slabs as such for supporting the rails | E01B 3/14, E01B 3/24, E01B 3/40 |
| Draining of tramway rails | E01B 21/02 |
| Placing, working or taking-up the ballast | E01B 27/00 |
| Making of concrete parts of the track in situ | E01B 29/005 |
| Means for temporarily supporting the sleeper or the track | E01B 29/40 |
| Fastening railway sleepers to bridges | E01D 19/12 |
| Draining the sub-base of railways by trenches, culverts or conduits | E01F 5/00 |

### *Informative references*

*Attention is drawn to the following places, which may be of interest for search:*

| | |
|---|---|
| Draining of streets | E01C 11/224 |
| Draining of sport grounds | E01C 13/00, E01C 13/02 |
| Draining arrangements for bridges | E01D 19/086 |
| Drainage of soils in general | E02B 11/00 |