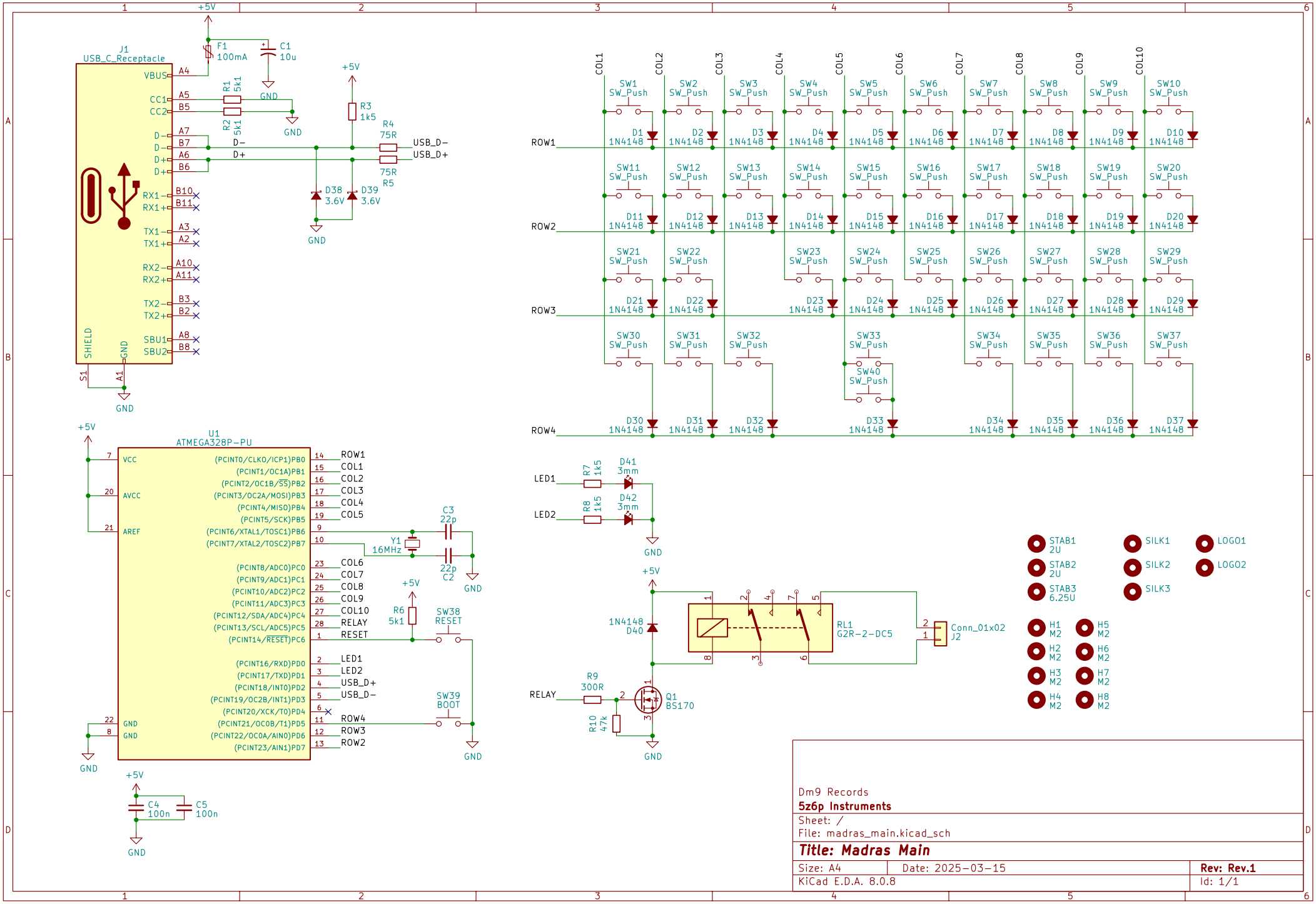

Dm9 Records
5z6p Instruments
Sheet: /
File: madras_main.kicad_sch

Title: Madras Main

Size: A4	Date: 2025-03-15	**Rev: Rev.1**
KiCad E.D.A. 8.0.8		Id: 1/1