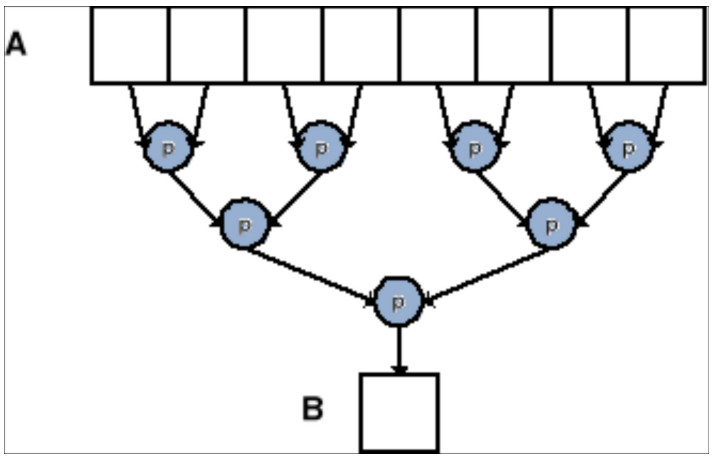
A
p
p
p
p
p
p
p
B