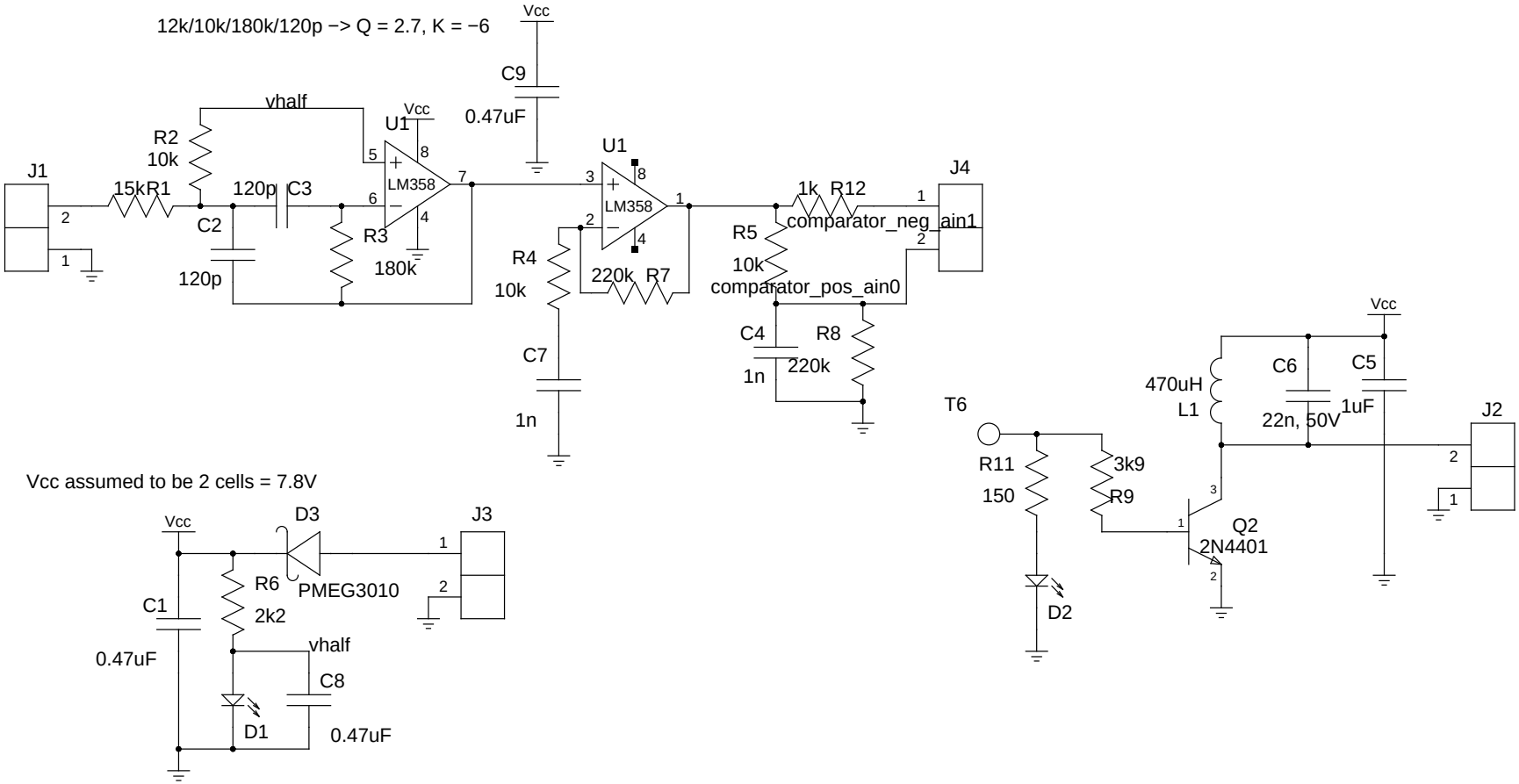

TITLE free_ranger.sch	
FILE:	REVISION: Harold Tay
PAGE 1 OF 1	DRAWN BY: htarold@gmail.com