QFN and Analog Breakout For TinyTapeout Skywater ASICs

This version of the breakout allows access to the ASIC I/O, management and analog interfaces.
It has (breaking) changes, namely

* it receives the DB 3v3 IO level as well as the VUSB and it takes on the responsibility of regulating its IO/Vcore voltages
* provides interfaces to supply or monitor each VDD* and VCC* independently
* provides means to send off analog signals to demoboard, and its weak pull-downs, or severe that connection
* provides a flexible interface to analog signals directly
* is naturally keyed, owing to new bottom-side connectors
* new connectors have high speed capability (up to USB4/20Gbps), higher density and, optionally, a shielded version for improved noise immunity.
* adds additional I/O from bottom-side for management, eeprom ID or expansion.
* aims to be basis for future chip processes/vcore levels.

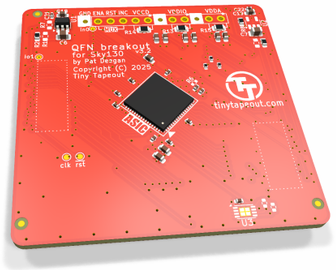

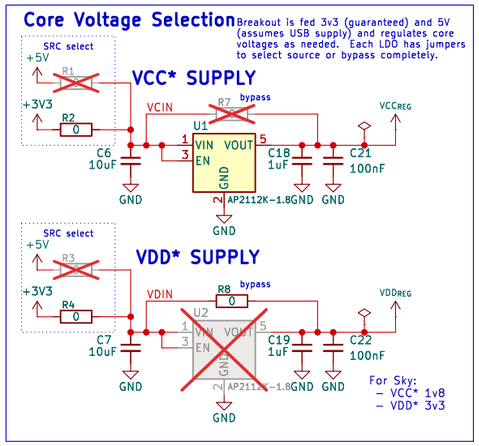

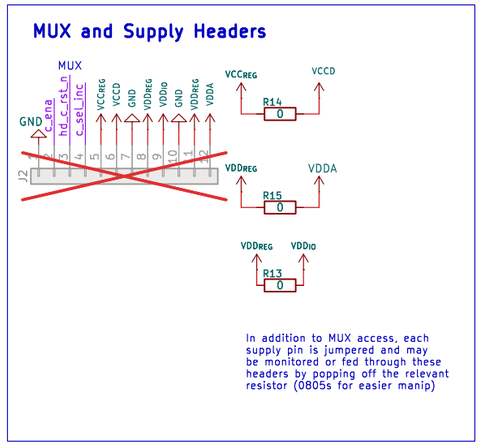

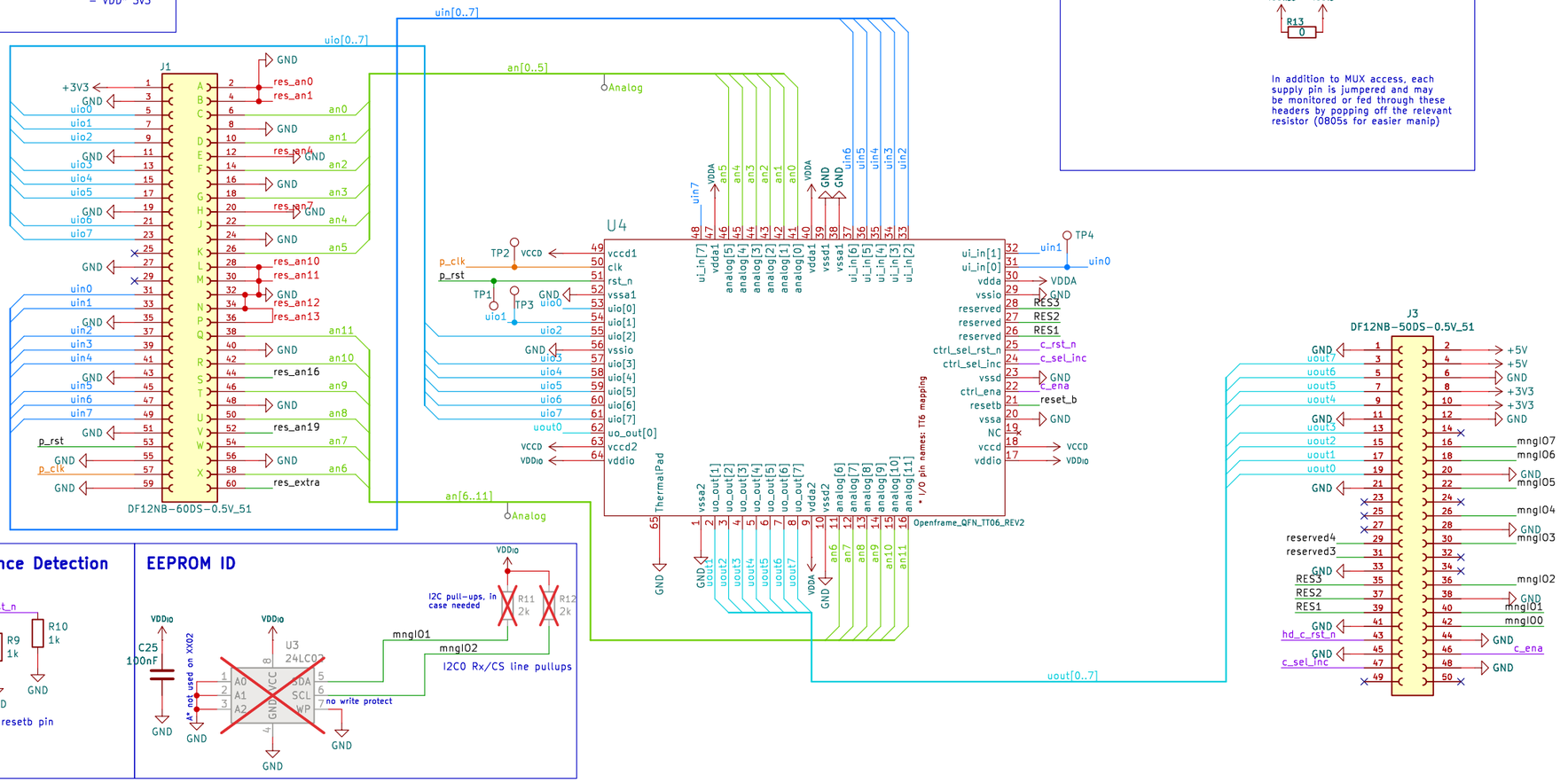

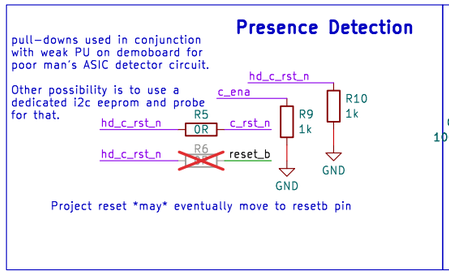

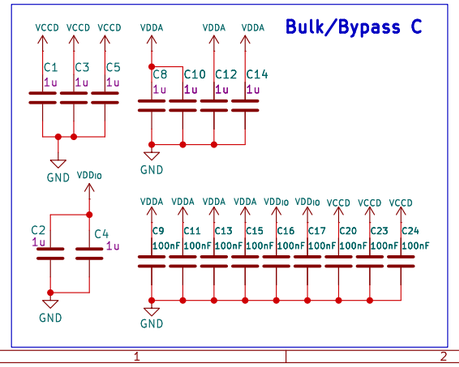

FID1 Fiducial
FID2 Fiducial
FID3 Fiducial

(C) 2025 Pat Deegan
Psychogenic Technologies INC

Sheet: /
File: breakout-sky-qfn.kicad_sch

Title: QFN and Analog Breakout For TinyTapeout Skywater ASICs

Size: A3	Date: 2025-12-02	**Rev: 3.1**
KiCad E.D.A. 9.0.6		Id: 1/1