FabricFox FPGASIC

This is a minimalist FPGA board to be used as an "ASIC simulator" atop Tiny Tapeout demoboards (TT06+). The RP2 on the DB is charged with configuring the up5k FPGA, which is configured in CRAM mode, and awaits programming on power-up. The two (bottom side) connectors match the footprint of the ASIC breakout boards and map all the digital I/O, as well as project clock and reset, to the FPGA.

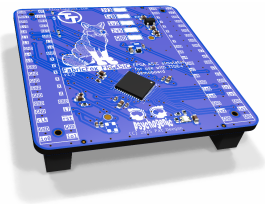

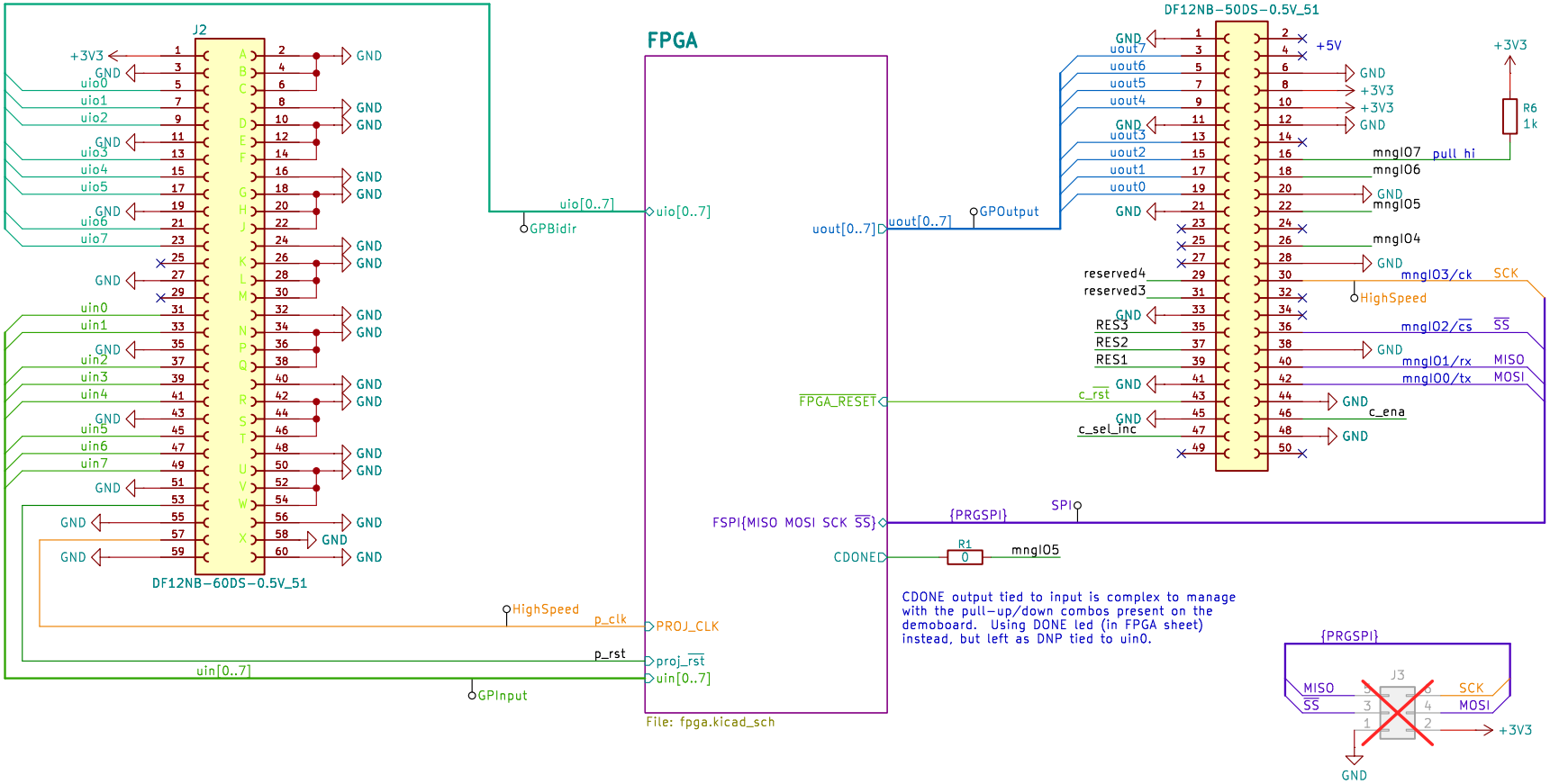

CDONE output tied to input is complex to manage with the pull-up/down combos present on the demoboard. Using DONE led (in FPGA sheet) instead, but left as DNP tied to uin0.

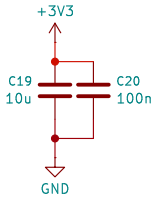

FID1 Fiducial
FID2 Fiducial
FID3 Fiducial

(C) 2025 Pat Deegan
Psychogenic Technologies INC

Sheet: /
File: ttdbv3-fpga-ICE40UP5k.kicad_sch

Title: FabricFox FPGASIC

Size: A4	Date: 2025-12-01	**Rev: 2.0**
KiCad E.D.A. 9.0.6		Id: 1/2

Fox icon based on image by **Stampf @ Pixabay.com**

UP5K FPGA and Support

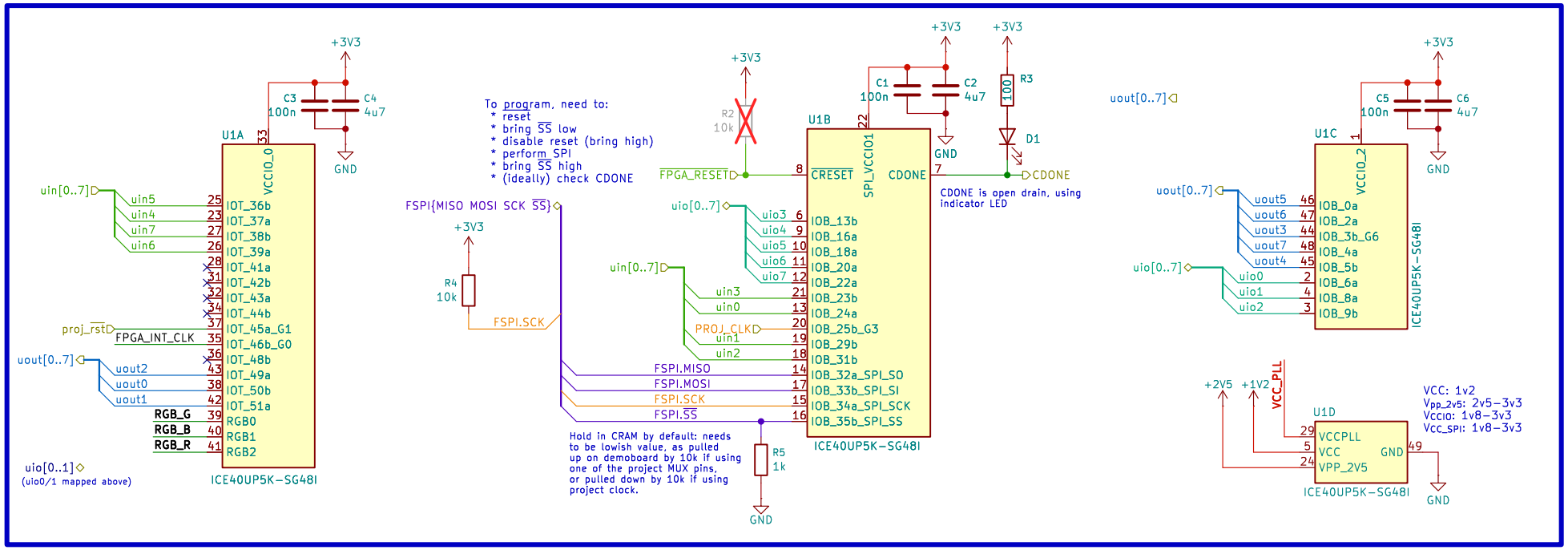

Power

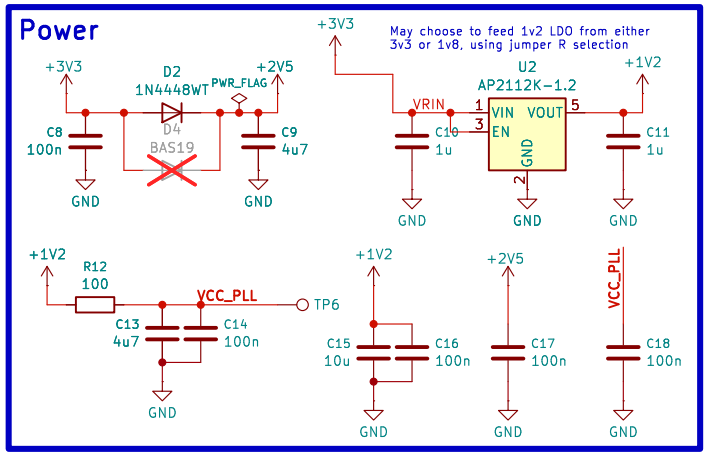

On-board Oscillator

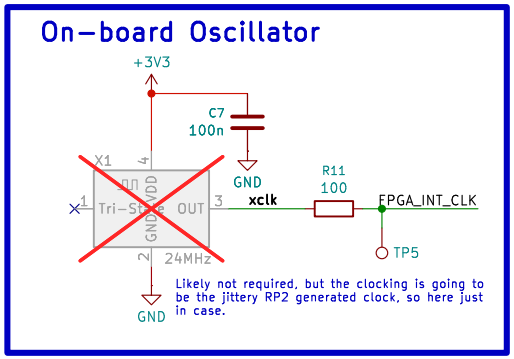

RGB LED

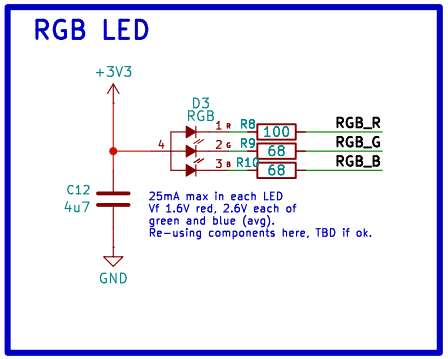

(C) 2025 Pat Deegan

Psychogenic Technologies INC

Sheet: /FPGA/
File: fpga.kicad_sch

Title: UP5K FPGA and Support

Size: A4	Date: 2025-12-01	Rev: 1.0
KiCad E.D.A. 9.0.6		Id: 2/2