Tiny Tapeout Demoboard v3

https://github.com/TinyTapeout/tt-demo-pcb

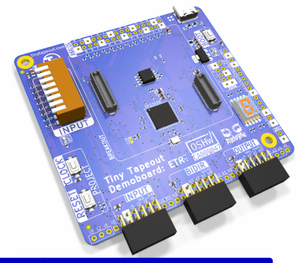

User Input + Config

Input DIP

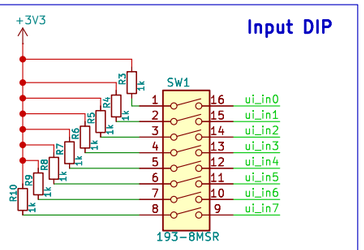

Alt: 76SB08ST

RP Boot Mode

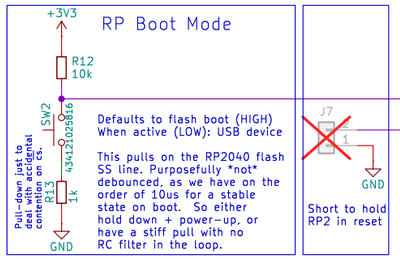

Defaults to flash boot (HIGH) When active (LOW): USB device

This pulls on the RP2040 flash SS line. Purposefully *not* debounced, as we have on the order of 10us for a stable state on boot. So either hold down + power-up, or have a stiff pull with no RC filter in the loop.

Pull-down just to deal with accidental connection on SS

Short to hold RP2 in reset

Momentary Switches (debounced)

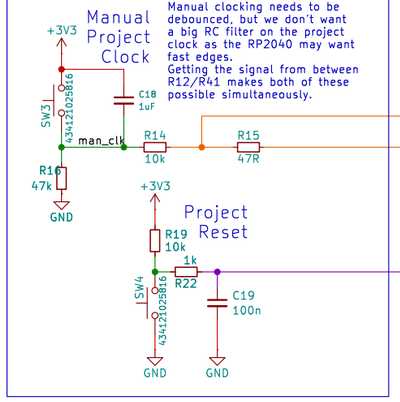

Manual clocking needs to be debounced, but we don't want a big RC filter on the project clock as the RP2040 may want fast edges.
Getting the signal from between R12/R41 makes both of these possible simultaneously.

Power

USB connector

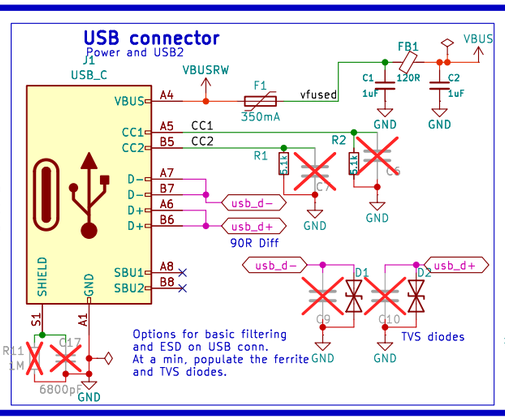

3V3 LDO

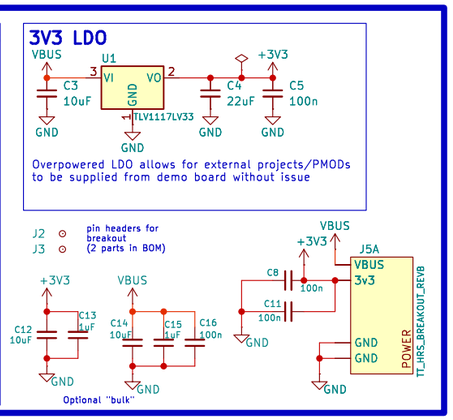

RP2350B

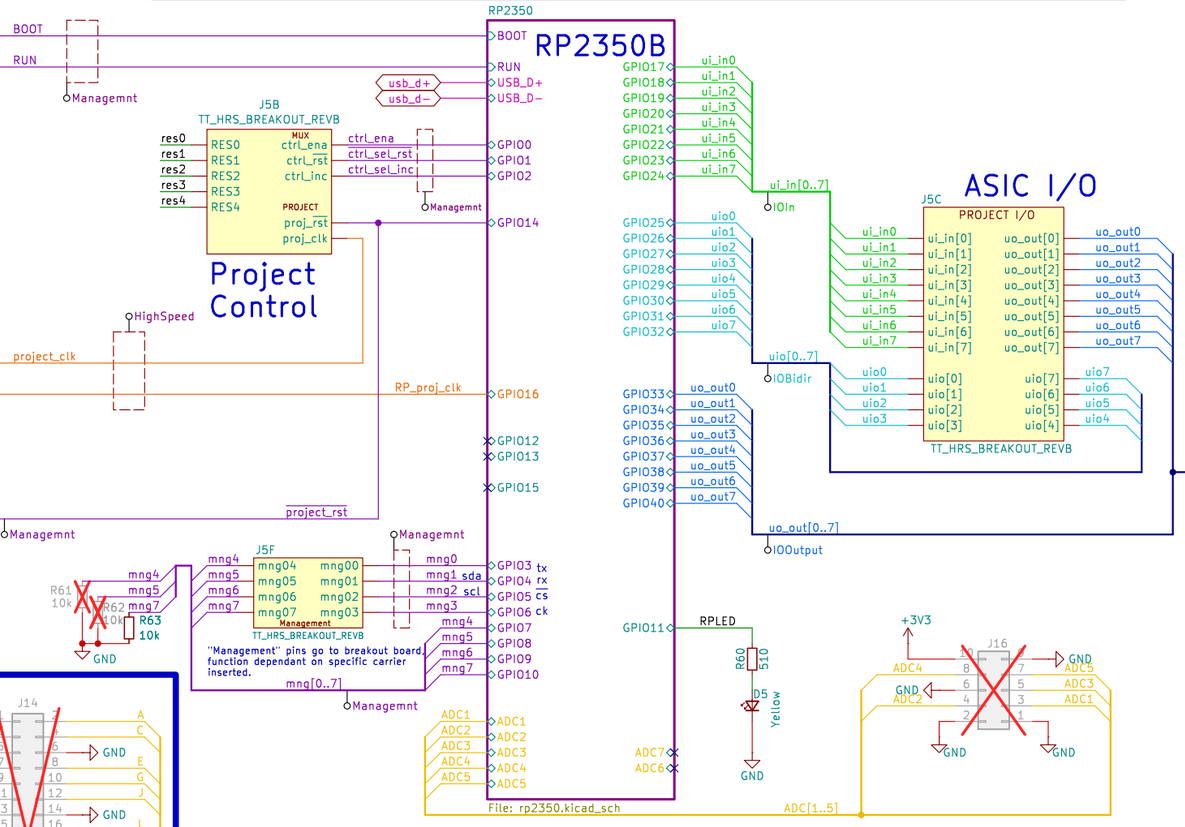

ASIC I/O

Edge connectors: Project

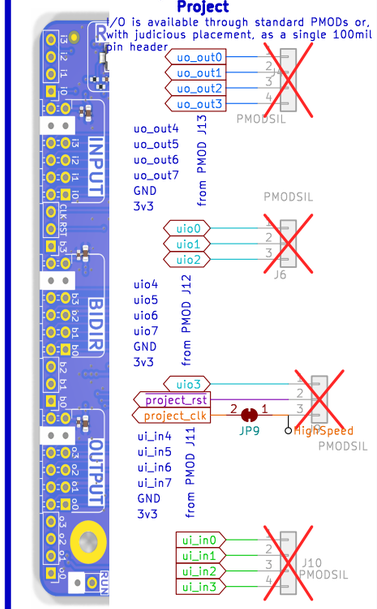

I/O is available through standard PMODs or, with judicious placement, as a single 100mil pin header

Edge connectors: Management

Project MUX, power and reserved pins available on this header

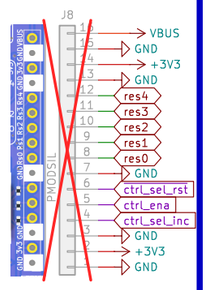

Indication

LEDs (Power good, GPIO)

7-segment Display

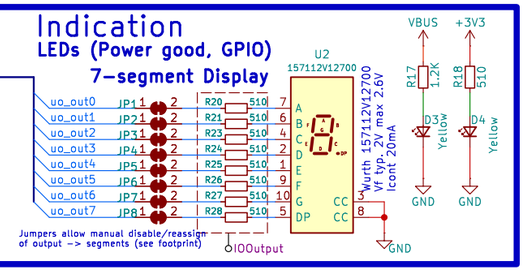

Jumpers allow manual disable/reassign of output -> segments (see footprint)

Analog

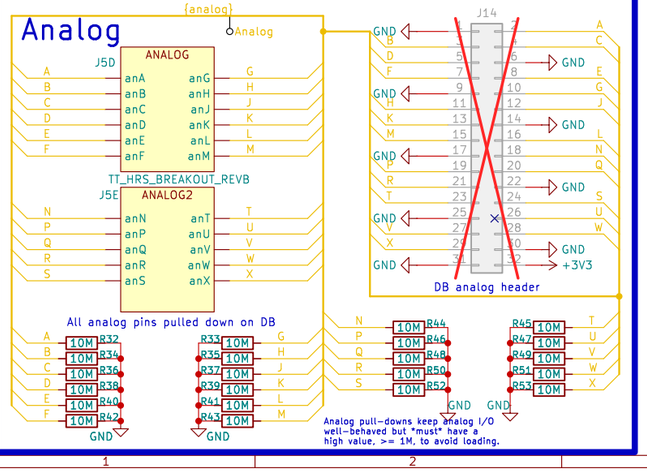

Analog pull-downs keep analog I/O well-behaved but *must* have a high value, >= 1M, to avoid loading.

PMOD

Input PMOD

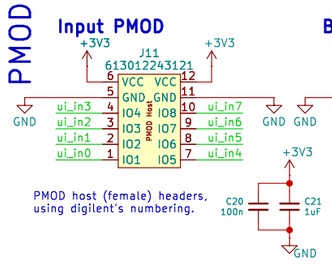

Bidir PMOD

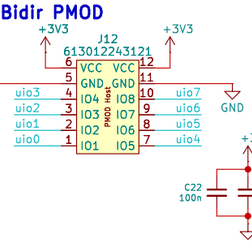

Output PMOD

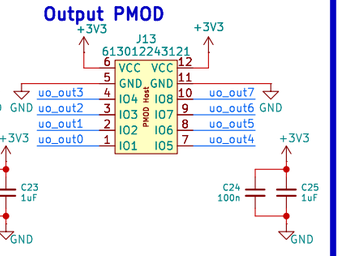

PMOD host (female) headers, using digilent's numbering.

Misc Support

Mounting holes

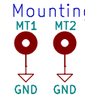

Fiducials

Panel-level fids for prod but included for one-offs and testing.

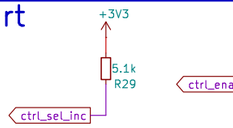

Stronger pull-downs on carrier side allow us to determine if an ASIC board is actually connected (vs and FPGA sim board, or nothing).
On startup, read the ctrl en and reset, if they are low, we have an ASIC carrier. From then, drive the lines normally.

(C) 2025 Pat Deegan

Psychogenic Technologies INC

Sheet: /
File: tinytapeout-demo.kicad_sch

Title: Tiny Tapeout Demoboard v3

Size: A3	Date: 2025-11-12	Rev: 3.2
KiCad E.D.A. 9.0.6		Id: 1/2

RP2350B (QFN80) and Support

Recommended is the ABM8-272-T3 with a C_L of 10pF
but operating temp is -10 to 60C.
The AEC Q200 rated FC3BAEBGI12.0-T1 is specified for
-40 to 125C and the T variant -55 to 125, with a C_L of 12pF

Rule of thumb
C_a, C_b = 2 * C_L - 2 * C_{stray}
Typical stray cap, maybe ~5pF

For 12pF C_L = ((C_a * C_b)/(C_a + C_b)) + C_{stray}
use 14pF

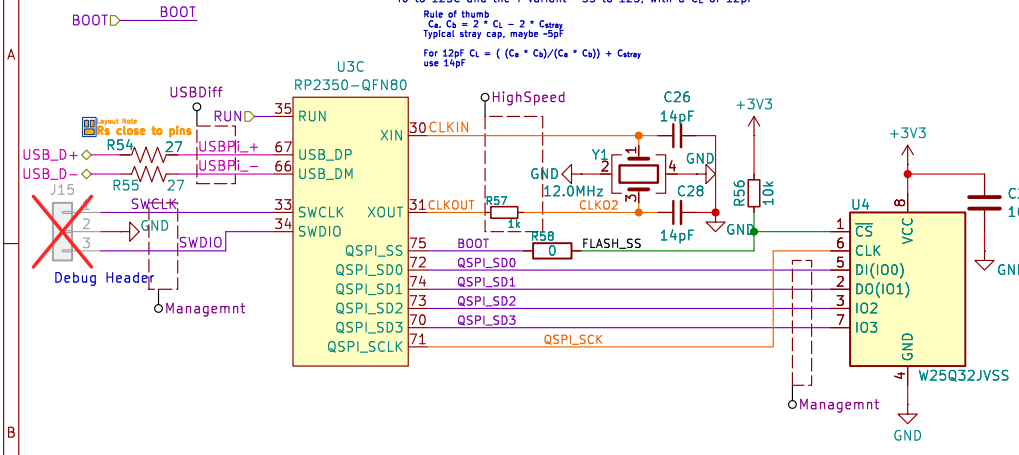

GPIO	F0	F1	F2	F3	F4	F5	F6	F7	F8	F9	F10	F11
0		SPI0 RX	UART0 TX	I2C0 SDA	PWM0 A	SIO	PIO0	PIO1	PIO2	GM CS1n	USB OVCUR DET	
1		SPI0 CSn	UART0 RX	I2C0 SCL	PWM0 B	SIO	PIO0	PIO1	PIO2	TRACECLK	USB VBUS DET	
2		SPI0 SCK	UART0 CTS	I2C1 SDA	PWM1 A	SIO	PIO0	PIO1	PIO2	TRACEDATA0	USB VBUS EN	UART0 TX
3		SPI0 TX	UART0 RTS	I2C1 SCL	PWM1 B	SIO	PIO0	PIO1	PIO2	TRACEDATA1	USB OVCUR DET	UART0 RX
4		SPI0 RX	UART1 TX	I2C0 SDA	PWM2 A	SIO	PIO0	PIO1	PIO2	TRACEDATA2	USB VBUS DET	
5		SPI0 CSn	UART1 RX	I2C0 SCL	PWM2 B	SIO	PIO0	PIO1	PIO2	TRACEDATA3	USB VBUS EN	
6		SPI0 SCK	UART1 CTS	I2C1 SDA	PWM3 A	SIO	PIO0	PIO1	PIO2		USB OVCUR DET	UART1 TX
7		SPI0 TX	UART1 RTS	I2C1 SCL	PWM3 B	SIO	PIO0	PIO1	PIO2		USB VBUS DET	UART1 RX
8		SPI1 RX	UART1 TX	I2C0 SDA	PWM4 A	SIO	PIO0	PIO1	PIO2	GM CS1n	USB VBUS EN	
9		SPI1 CSn	UART1 RX	I2C0 SCL	PWM4 B	SIO	PIO0	PIO1	PIO2		USB OVCUR DET	
10		SPI1 SCK	UART1 CTS	I2C1 SDA	PWM5 A	SIO	PIO0	PIO1	PIO2		USB VBUS DET	UART1 TX
11		SPI1 TX	UART1 RTS	I2C1 SCL	PWM5 B	SIO	PIO0	PIO1	PIO2		USB VBUS EN	UART1 RX
12	HSTX	SPI1 RX	UART0 TX	I2C0 SDA	PWM6 A	SIO	PIO0	PIO1	PIO2	CLOCK GPIN0	USB OVCUR DET	
13	HSTX	SPI1 CSn	UART0 RX	I2C0 SCL	PWM6 B	SIO	PIO0	PIO1	PIO2	CLOCK GPOUT0	USB VBUS DET	
14	HSTX	SPI1 SCK	UART0 CTS	I2C1 SDA	PWM7 A	SIO	PIO0	PIO1	PIO2	CLOCK GPIN1	USB VBUS EN	UART0 TX
15	HSTX	SPI1 TX	UART0 RTS	I2C1 SCL	PWM7 B	SIO	PIO0	PIO1	PIO2	CLOCK GPOUT1	USB OVCUR DET	UART0 RX
16	HSTX	SPI0 RX	UART0 TX	I2C0 SDA	PWM0 A	SIO	PIO0	PIO1	PIO2		USB VBUS DET	
17	HSTX	SPI0 CSn	UART0 RX	I2C0 SCL	PWM0 B	SIO	PIO0	PIO1	PIO2		USB VBUS EN	
18	HSTX	SPI0 SCK	UART0 CTS	I2C1 SDA	PWM1 A	SIO	PIO0	PIO1	PIO2		USB OVCUR DET	UART0 TX
19	HSTX	SPI0 TX	UART0 RTS	I2C1 SCL	PWM1 B	SIO	PIO0	PIO1	PIO2	GM CS1n	USB VBUS DET	UART0 RX
20		SPI0 RX	UART1 TX	I2C0 SDA	PWM2 A	SIO	PIO0	PIO1	PIO2	CLOCK GPIN0	USB VBUS EN	
21		SPI0 CSn	UART1 RX	I2C0 SCL	PWM2 B	SIO	PIO0	PIO1	PIO2	CLOCK GPOUT0	USB OVCUR DET	
22		SPI0 SCK	UART1 CTS	I2C1 SDA	PWM3 A	SIO	PIO0	PIO1	PIO2	CLOCK GPIN1	USB VBUS DET	UART1 TX
GPIO	F0	F1	F2	F3	F4	F5	F6	F7	F8	F9	F10	F11
23		SPI0 TX	UART1 RTS	I2C1 SCL	PWM3 B	SIO	PIO0	PIO1	PIO2	CLOCK GPOUT1	USB VBUS EN	UART1 RX
24		SPI1 RX	UART1 TX	I2C0 SDA	PWM4 A	SIO	PIO0	PIO1	PIO2	CLOCK GPOUT2	USB OVCUR DET	
25		SPI1 CSn	UART1 RX	I2C0 SCL	PWM4 B	SIO	PIO0	PIO1	PIO2	CLOCK GPOUT3	USB VBUS DET	
26		SPI1 SCK	UART1 CTS	I2C1 SDA	PWM5 A	SIO	PIO0	PIO1	PIO2		USB VBUS EN	UART1 TX
27		SPI1 TX	UART1 RTS	I2C1 SCL	PWM5 B	SIO	PIO0	PIO1	PIO2		USB OVCUR DET	UART1 RX
28		SPI1 RX	UART0 TX	I2C0 SDA	PWM6 A	SIO	PIO0	PIO1	PIO2		USB VBUS DET	
29		SPI1 CSn	UART0 RX	I2C0 SCL	PWM6 B	SIO	PIO0	PIO1	PIO2		USB VBUS EN	
GPIOs 30 through 47 are GPIO-B0 only												
30		SPI1 SCK	UART0 CTS	I2C1 SDA	PWM7 A	SIO	PIO0	PIO1	PIO2		USB OVCUR DET	UART0 TX
31		SPI1 TX	UART0 RTS	I2C1 SCL	PWM7 B	SIO	PIO0	PIO1	PIO2		USB VBUS DET	UART0 RX
32		SPI0 RX	UART0 TX	I2C0 SDA	PWM8 A	SIO	PIO0	PIO1	PIO2		USB VBUS EN	
33		SPI0 CSn	UART0 RX	I2C0 SCL	PWM8 B	SIO	PIO0	PIO1	PIO2		USB OVCUR DET	
34		SPI0 SCK	UART0 CTS	I2C1 SDA	PWM9 A	SIO	PIO0	PIO1	PIO2		USB VBUS DET	UART0 TX
35		SPI0 TX	UART0 RTS	I2C1 SCL	PWM9 B	SIO	PIO0	PIO1	PIO2		USB VBUS EN	UART0 RX
36		SPI0 RX	UART1 TX	I2C0 SDA	PWM10 A	SIO	PIO0	PIO1	PIO2		USB OVCUR DET	
37		SPI0 CSn	UART1 RX	I2C0 SCL	PWM10 B	SIO	PIO0	PIO1	PIO2		USB VBUS DET	
38		SPI0 SCK	UART1 CTS	I2C1 SDA	PWM11 A	SIO	PIO0	PIO1	PIO2		USB VBUS EN	UART1 TX
39		SPI0 TX	UART1 RTS	I2C1 SCL	PWM11 B	SIO	PIO0	PIO1	PIO2		USB OVCUR DET	UART1 RX
40		SPI1 RX	UART1 TX	I2C0 SDA	PWM8 A	SIO	PIO0	PIO1	PIO2		USB VBUS DET	
41		SPI1 CSn	UART1 RX	I2C0 SCL	PWM8 B	SIO	PIO0	PIO1	PIO2		USB VBUS EN	
42		SPI1 SCK	UART1 CTS	I2C1 SDA	PWM9 A	SIO	PIO0	PIO1	PIO2		USB OVCUR DET	UART1 TX
43		SPI1 TX	UART1 RTS	I2C1 SCL	PWM9 B	SIO	PIO0	PIO1	PIO2		USB VBUS DET	UART1 RX
44		SPI1 RX	UART0 TX	I2C0 SDA	PWM10 A	SIO	PIO0	PIO1	PIO2		USB VBUS EN	
GPIO	F0	F1	F2	F3	F4	F5	F6	F7	F8	F9	F10	F11
45		SPI1 CSn	UART0 RX	I2C0 SCL	PWM10 B	SIO	PIO0	PIO1	PIO2		USB OVCUR DET	
46		SPI1 SCK	UART0 CTS	I2C1 SDA	PWM11 A	SIO	PIO0	PIO1	PIO2		USB VBUS DET	UART0 TX
47		SPI1 TX	UART0 RTS	I2C1 SCL	PWM11 B	SIO	PIO0	PIO1	PIO2	GM CS1n	USB VBUS EN	UART0 RX

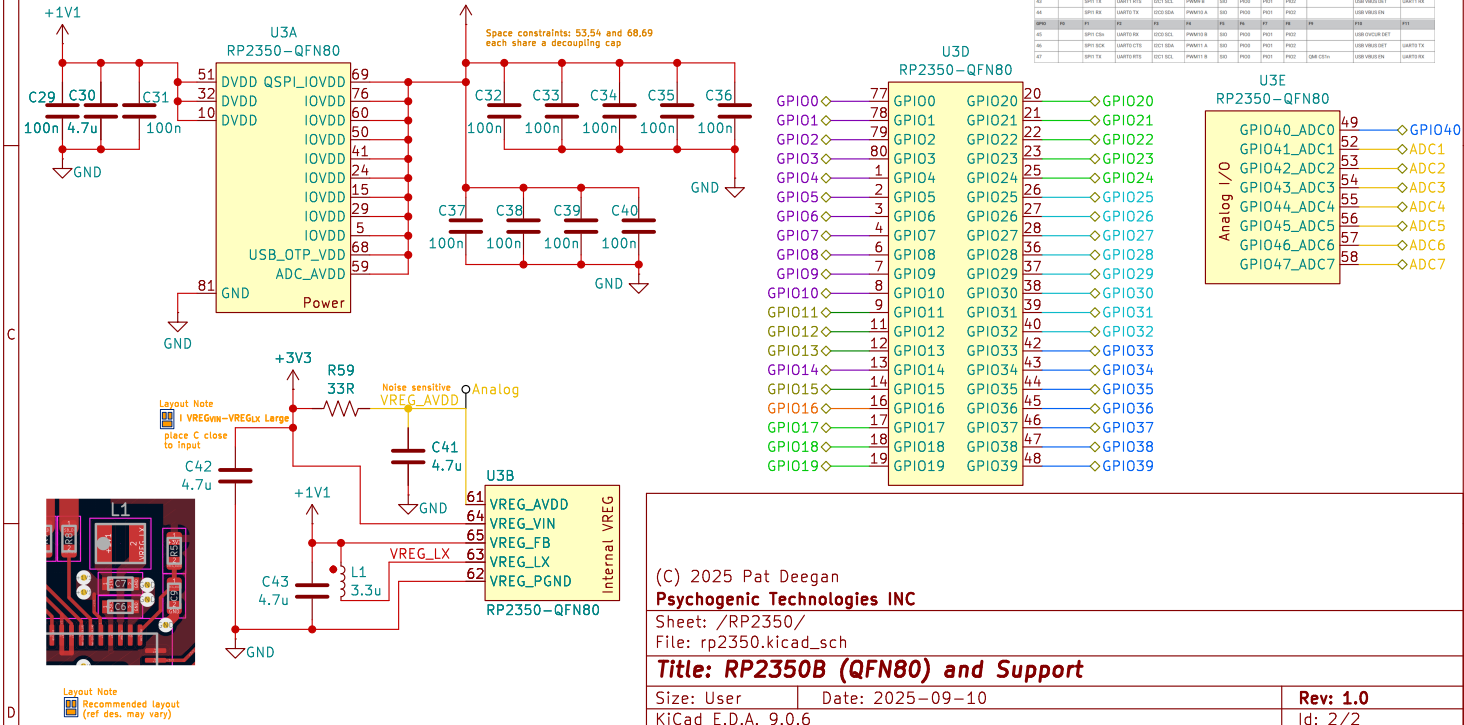

(C) 2025 Pat Deegan

Psychogenic Technologies INC

Sheet: /RP2350/
File: rp2350.kicad_sch

Title: RP2350B (QFN80) and Support

Size: User	Date: 2025-09-10	**Rev: 1.0**
KiCad E.D.A. 9.0.6		Id: 2/2