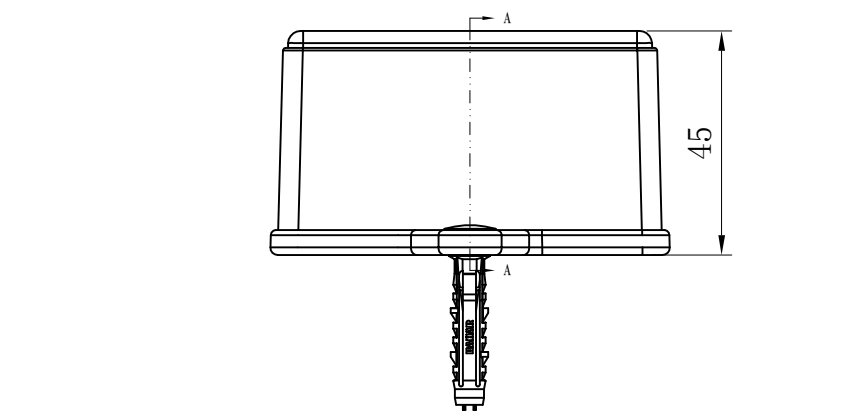
A
45
A

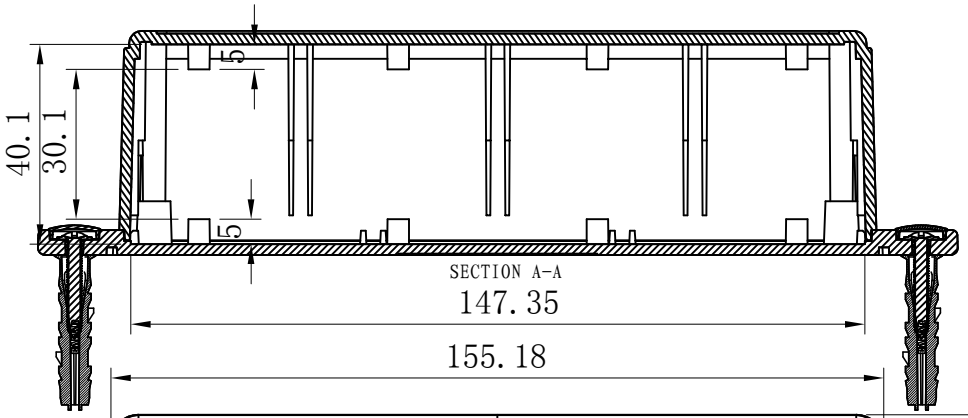
5
40.1
30.1
5
SECTION A-A
147.35
155.18

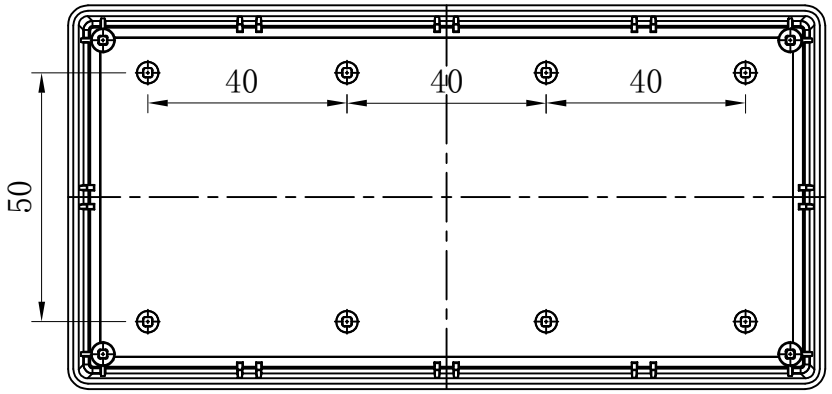
40
40
40
50

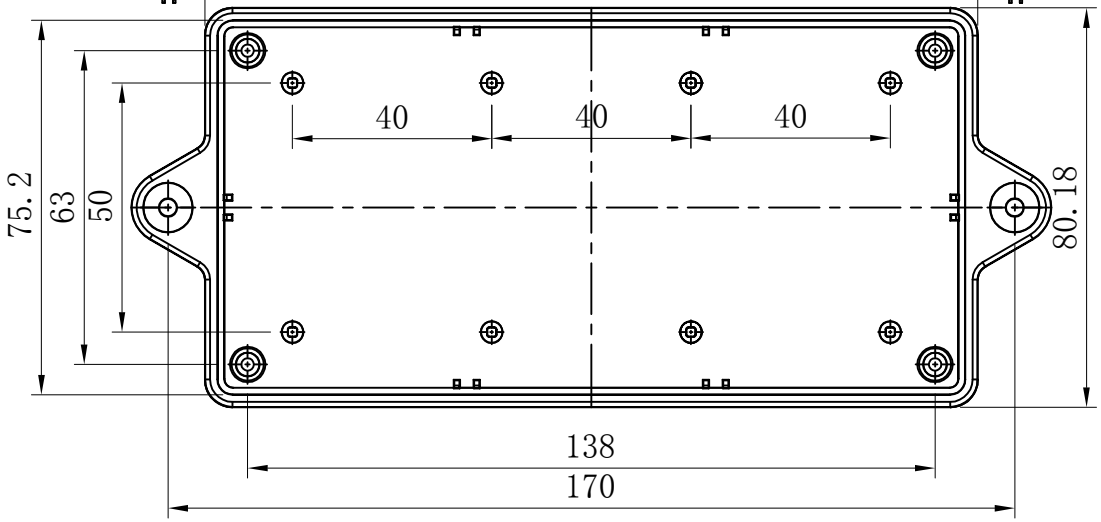
40
40
40
75.2
63
50
80.18
138
170

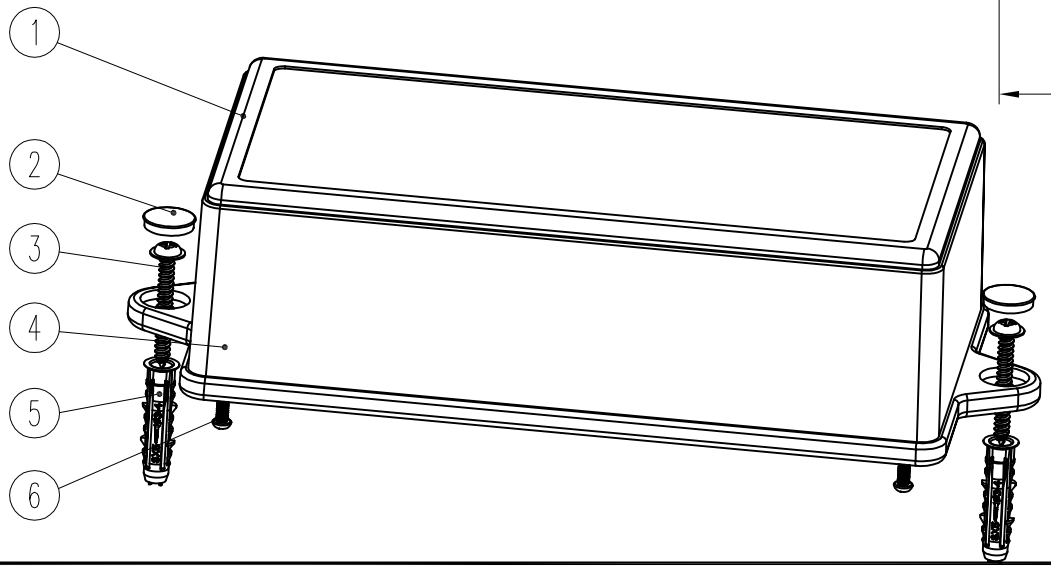
1
2
3
4
5
6