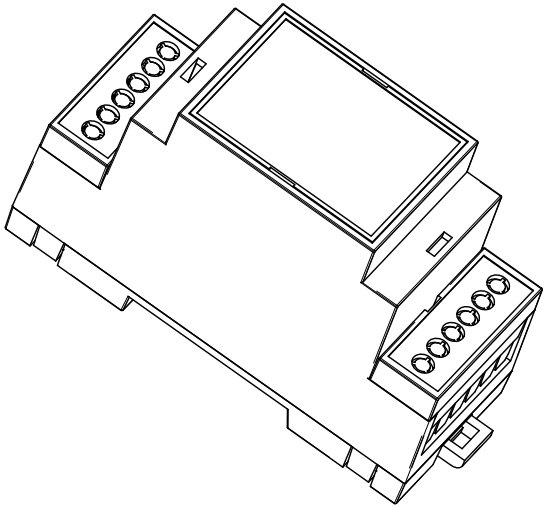

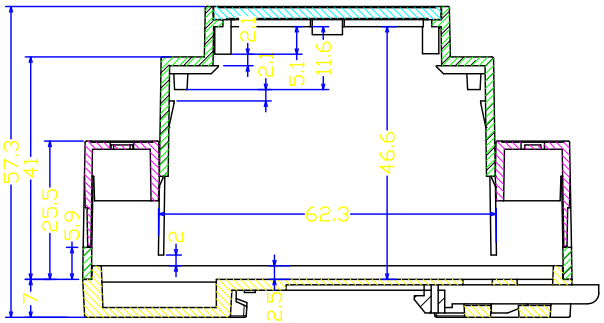
57.3
41
25.5
5.9
7
2.1
2.1
5.1
11.6
46.6
62.3
2
2.5

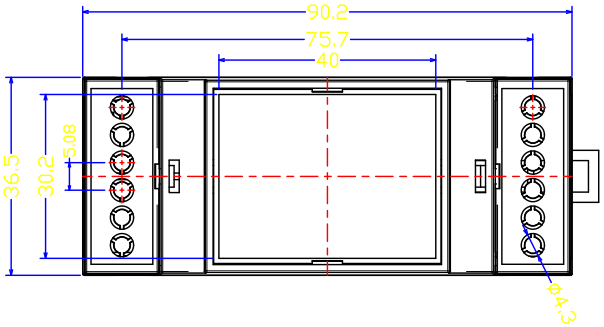
90.2
75.7
40
36.5
30.2
3.08
ϕ4.3

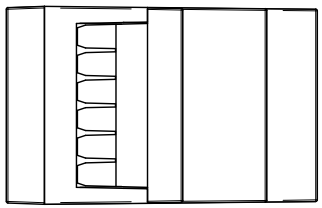

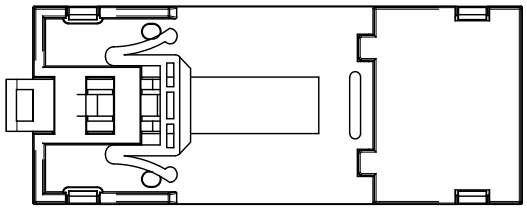

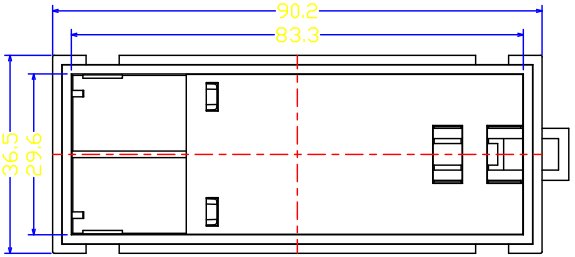
90.2
83.3
36.5
29.6