HTNB32L Breakout Board V3

SiP HTNB32L

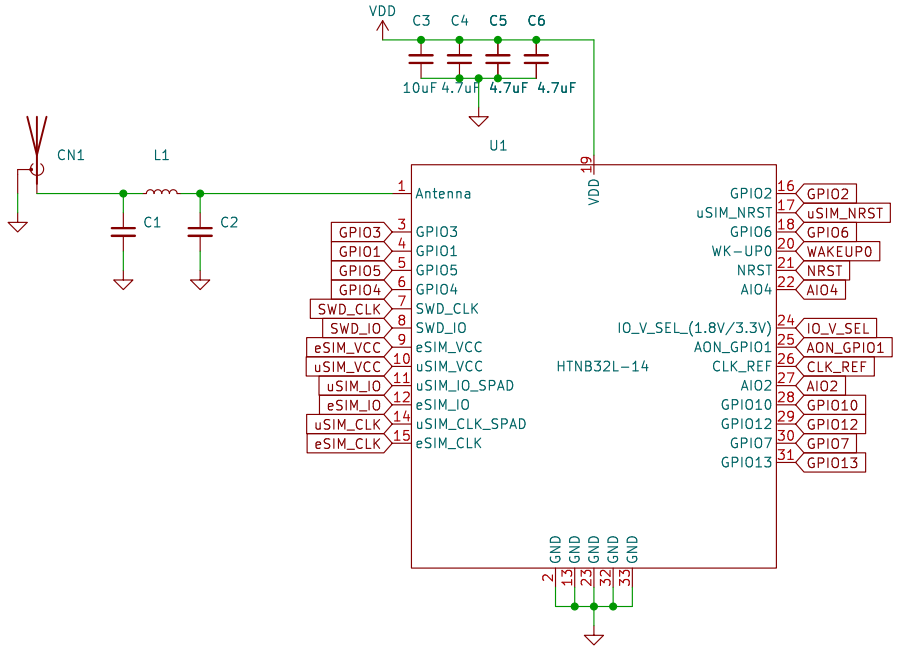

SIM Card Socket

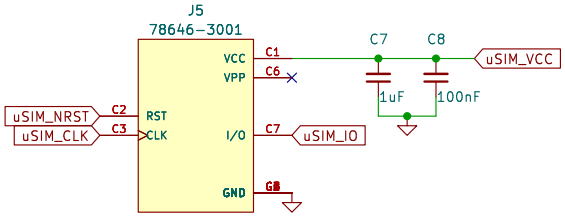

Headers

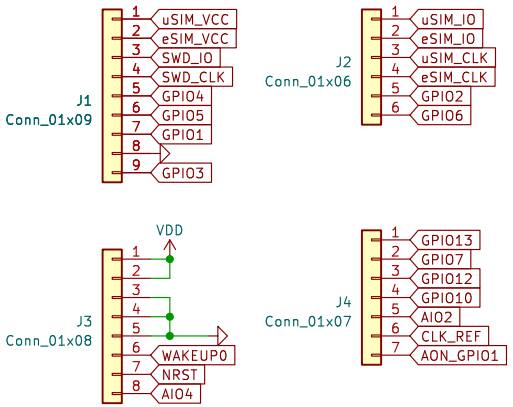

RF Shielding

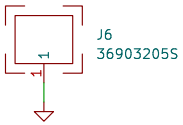

IOs Voltage Selection Jumper

HT MICRON semicondutores

Sheet: /
File: HTNB32L-14_Breakout_Board-30.kicad_sch

Title: HTNB32L Breakout Board V3

Size: A4	Date: 2023-07-12	Rev: Rev 1.0
KiCad E.D.A. eeschema 7.0.2		Id: 1/1