Videojet 2300 Series

Service Manual

P/N - 463001-01

Revision: AA, November 2017

Copyright November 2017, Videojet Technologies Inc.(herein referred to as Videojet). All rights reserved.

This document is the property of Videojet Technologies Inc. and contains confidential and proprietary information owned by Videojet. Any unauthorized copying, use or disclosure of it without the prior written permission of Videojet is strictly prohibited. CLARiTY®, CLARiSOFT® and CLARiNET® are registered trademarks.

Videojet Technologies Inc.

1500 Mittel Boulevard
Wood Dale, IL
60191-1073 USA
www.videojet.com

Phone: 1-800-843-3610
Fax: 1-800-582-1343
Int'l Fax: 630-616-3629

Offices - USA: Atlanta, Chicago
Int'l: Canada, France, Germany, Ireland, Japan, Spain, Singapore, The Netherlands, and The United Kingdom
Distributors Worldwide

Compliance Information

For Customers in the U.S.A.

This device complies with Part 15 of the FCC Rules. Operation is subject to the following two conditions:

1) This device may not cause harmful interference, and

2) This device must accept any interference received, including interference that may cause undesired operation.

Warning

PERSONAL INJURY. Changes or modifications to this unit not expressly approved by the party responsible for compliance could void the user's authority to operate the equipment.

This equipment has been tested and found to comply with the limits for a Class A digital device, pursuant to Part 15 of the FCC Rules. These limits are designed to provide responsible protection against harmful interference when the equipment is operated in a commercial environment. This equipment generates, uses, and can radiate radio frequency energy and, if not installed and used in accordance with the instruction manual, may cause harmful interference to radio communications. Operation of this equipment in a residential area is likely to cause harmful interference. In such cases, the users will be required to correct the interference at their own expense.

Shielded cables must be used with this unit to ensure compliance with Class A FCC limits.

The user may find the following booklet prepared by the Federal Communications Commission helpful: How to Identify and Resolve Radio-TV Interference Problems. This booklet is available from the U.S. Government Printing Office, Washington, DC 20402, Stock No. 004-00-00345-4.

This equipment has been tested and certified for compliance with U.S. regulations regarding safety.

For Customers in Canada

This digital apparatus does not exceed the Class A limits for radio noise emissions from digital apparatus set out in the Radio Interference Regulations of the Canadian Department of Communications.

This equipment has been tested and certified for compliance with Canadian regulations regarding safety.

Pour la Clientèle du Canada

Le present appareil numerique n'emet pas de bruits radioelectriques depassant les limites applicales aux appareils numerique de las class A prescrites dans le Reglement sur le brouillage radioelectrique edicte par le ministere des Communications du Canada.

Cet équipment est certifié CSA.

For Customers in the European Union

This equipment displays the CE mark to indicate conformance to the following legislation:

EC EMC Directive 2014/30/EU

Essential health and safety requirements relating to electromagnetic compatibility.

EN 61000-6-4	Generic Emissions Standard for Heavy Industrial Environments
EN 61000-3-2	Harmonic Current Fluctuations
EN 61000-3-3	Voltage Fluctuation and Flicker
EN 61000-6-2	Generic standards - Immunity for industrial environments

EC Low Voltage Directive 2014/35/EU

Essential health and safety requirements relating to electrical equipment designed for use within certain voltage limits.

EN 62368-1(IEC 62368-1)

Safety requirements for audio/video, information and communication technology equipment.

EMC Directive

All machinery and ancillary equipment supplied by Videojet are certified to EN and FCC standards which includes the necessary tests to ensure that the equipment supplied meets the requirements of the Electromagnetic Compatibility (EMC) Directive of the European Union and FCC rules CFR47 relating to electromagnetic emissions.

Under no circumstances should any of the equipment or any of its interconnecting cables supplied by Videojet be modified or altered in any way as this may result in the equipment no longer complying with the Directive and could leave the person or company making such modifications liable to prosecution from the authorities.

It is also a requirement of the EMC Directive that any other items of ancillary equipment that may be added to the products supplied by Videojet (e.g. sensors, connection cables, junction boxes and so on) during the normal course of an installation, should also be supplied and installed in accordance with the EMC Directive. The person or company supplying and installing these ancillary components or assemblies is responsible for ensuring such compliance and in the event of non-compliance, would be liable in the event of prosecution by the authorities.

It is strongly recommended that all personnel involved in the installation of equipment should be familiar with the EMC Directive and trained in the correct installation methods required to ensure compliance of their installation with the Directive.

The following guidelines intended to highlight the most important areas of good installation practice when installing the Videojet equipment but they are not intended to be a substitute for the installers own knowledge of the Directive nor do they in any way assume responsibility for the actions of the installer of the equipment.

Using Bought Out Parts for Use in an Equipment Installation

Before purchasing any components for use in an installation of the Videojetequipment, you should check with the manufacturer that they have been EMC tested to an EN standard which is relevant to your equipment and are provided with EMC installation instructions e.g.:

- sensors and encoders
- programmable logic controllers (PLC)
- power supplies
- connection and junction boxes

If you buy components which have not been EMC tested you will have to do the tests yourself.

Whilst there is no guarantee that an electrical installation made entirely from EMC complying components will comply with the Directive, it is more than likely that it will comply, provided the following basic principles are followed.

Cabling

Cables which connect between items of equipment are a major cause of radiated emissions and also act as antennae by which radiated electromagnetic interference can enter an apparatus. It follows that cable screening and separation is essential to achieve electromagnetic compatibility. The following guidelines should be followed.

Cables in Enclosures

Cable to cable interference, by means of radiated emissions, can cause problems within equipment enclosures. For instance, running an unshielded data cable using a high frequency carrier next to an unshielded analogue cable would cause carrier pick up in the analogue signal, possibly to a level which would cause a malfunction of the equipment. It is therefore necessary to group cables into one of the following four groups:

Group A Unshielded analogue cables

Unshielded cables for DC

Group B Shielded data cables

Shielded analogue cables

Unshielded cables for DC and AC < 60 V

Shielded cables for DC and AC < 280 V

Group C Unshielded cables for DC and AC < 60 V and < 280 V

Group D Unshielded cables for DC and AC > 280 V < 1 kV

Each cable group should be installed in separate cable ducts or cable bundles in the enclosure.

For parallel runs of cable, there should be at least 100 mm between each cable group.

Cable groups should only cross at right angles.

Where a shielded cable is used, care must be taken in the earthing of the shield.

When using a bought in component, the manufacturer's instructions should be followed, but where no advice is available the guidelines below can be used.

Cables Outside of Enclosures

The following principles should be observed:

- Always use shielded analogue cables.
- Always shield digital signal cables, unless recommended otherwise by the manufacturer or testing has shown that a shield is not required.
- Use twisted cables where possible to minimize ground loops; see best practice example below.

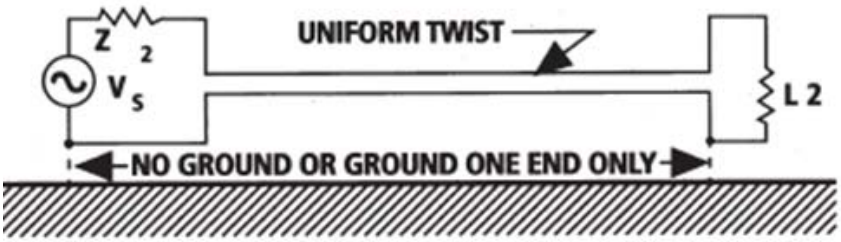

Figure : Best Practice

- Always run power, signal and returns together to minimize ground loops.
- Install cables with voltages > 270 V in steel wire armoured cable or metal conduit.
- Do not install signal cables directly parallel to power cables.
- Avoid using terminal lugs to extend cables.
- Very noisy or high frequency equipment will require cables with copper braiding.
- Conduit if used should be metal.
- Flexible conduit must have glands which earth the metal liner.
- Steel trunking should not be relied upon for effective shielding.

Shield Termination

Where bought in equipment is being used, the manufacturer's instructions for the termination of shields should always be followed. However, where no advice is given, the following guidelines can be followed:

- Earth the shield at both ends, unless doing so creates an undesirable earth loop. If this is the case, earth at only one end, preferably at the end which is closest to the central earthing point.
- Shielded cable should be connected to enclosures using glands which gives 360° shield to metal contact.

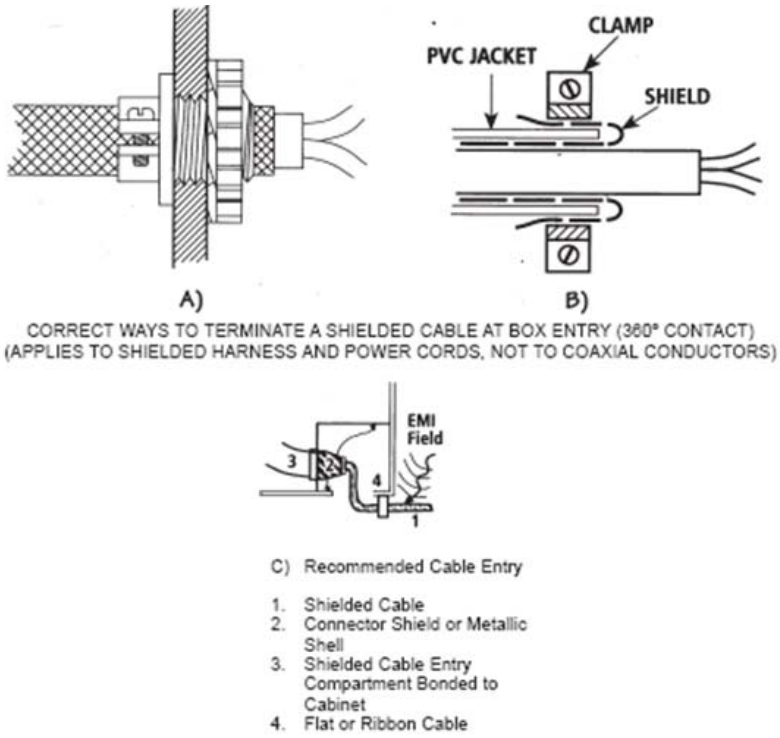

Figure : Cable Entry at Box Level

Communication Signals

Communication cables can be affected by radiated emissions to the point where a malfunction can occur. For instance, if a RS232 communications cable is run parallel to an unfiltered mains cable, radiated interference can pass from the mains cable to the communications cable, possibly corrupting the transmission.

Whether a communications link is a simple RS232 point to point link or a more complex local area network (LAN), the manufacturer of the communications equipment should provide instructions on how the components should be installed and housed, to meet the requirements of the EMC Directive. Inevitably, the actual installation will have different cable lengths and numbers of devices from the configuration that the manufacturer tested. However, due diligence can be shown by observing the following points:

- Check that the equipment has been tested against relevant European EMC standards.
- Use the recommended type of shielded cable.
- Use the recommended cable connectors, ensuring good shielding continuity.

Contactors, Relays, Solenoid Valves etc

Unless suitably suppressed, contactors, relays, solenoid valves and other devices which switch power voltages, will emit electromagnetic noise. This is because when the operating coil (AC or DC) is switched off, inductive voltage peaks of several thousand volts can occur. The effects of these induced voltages may be:

- Arcing across the contacts of mechanical switching devices.
- Contact material damage of mechanical switching devices.
- Operational disturbances of electronic control devices.
- Destruction of electronic switching devices.
- Radio frequency interference due to high frequency electromagnetic oscillations.

The same effects can also occur when using mechanical contacts to switch on a load, due to contact bounce. These effects increase as the power of the coil is increased.

However by wiring a suppressor in parallel with the load, the detrimental effects can be significantly reduced. Ideally all loads should be suppressed.

The positioning of each suppressor is important. Each suppressor should be positioned as close as possible to its load, to prevent switch-off oscillations in the current circuit wandering through the supply cables causing potential emissions.

When designing the layout of an enclosure which contains any relays, contactors, solenoids or other power switching devices, it is important that they are kept separate from components switching signal voltages. This may mean duplicating devices which switch both power and signal voltages.

Earthing

Correct earthing of the equipment can be the single most important consideration in achieving compliance with the EMC Directive. The equipment must use an incoming earth which is of good quality and good earth integrity must be maintained between the components which make up the equipment.

The quality of the incoming earth is generally the responsibility of the end user, so it should be drawn to his attention in the installation manual that this earth should be robust, of low impedance and noise free.

To achieve adequate earthing in an electrical apparatus the following points should be followed:

- All electrically conducting parts should be connected to earth potential either through their cases or with cable. For small parts where this is prohibitively difficult, for example isolated motor shafts, the part may be left unearthed.
- Where connection is made mechanically the joining surfaces must be conducting (without paint, not anodised, etc.). The paint layer can be broken using star washers, for example, but the surfaces must be anti-corrosion treated with electrically conductive materials if corrosion is likely. Avoid fasteners such as captive nuts, spring clasps and self tapping screws. Plastic or anodised fasteners should not be used.
- Signal earths must not be shared with power returns. Single point earthing is achieved if there is effectively a single earth, with all the equipment connected to this point.
- Multiple point earthing is an alternative where single point earthing is not feasible. In multiple point earthing, all equipment is connected to an earth plane at the closest possible point. The earth plane might be an equipment chassis or some other large conductive body should be chosen for the earth plane.
- Earth loops are created when there is more than one earth conduction path between the equipment and the incoming earth. Such earth loops should be avoided.
- Avoid coiling earth cables.
- Dissimilar metals should be avoided for bonding purposes, where water may be present. If dissimilar metals need to be used then coat the bond with a water repellent material.
- Follow the installation recommendations given by the component suppliers.

Support and Training

Contact Information

If you have any questions or need assistance, contact Videojet Technologies Inc.at 1-800-843-3610 (for all customers within the United States). Outside the U.S., the customers must contact their Videojet Technologies Inc.distributor or subsidiary for assistance.

Videojet Technologies Inc.
1500 Mittel Boulevard
Wood Dale, IL 60191-1073 U.S.A.
Phone: 1-800-843-3610
Fax: 1-800-582-1343
International Fax: 630-616-3629
Web: www.videojet.com

Service Program

About TotalSource

The TotalSource program is designed to protect your investment in Videojet printers and deliver the lowest total cost of ownership to your operations.

In addition to offering special pricing on Videojet high quality consumables and parts, TotalSource also provides comprehensive services and training at attractive discounts - all designed to help you keep your lines up and running.

- A complete array of customer services and offerings tailored to meet your operational needs
- A program designed to maximize your equipment uptime, allowing you to focus on your most important mission - your company's productivity
- A product and service program to support and deliver your ultimate purchase: a high quality, reliable printed code on your finished product.

Customer Training

If you wish to perform your own service and maintenance on the printer, Videojet Technologies Inc.highly recommends you, to complete a Customer Training Course on the printer.

Note: *The manuals are intended to be supplements to (and not replacements for)* Videojet Technologies Inc. *Customer Training.*

For more information on Videojet Technologies Inc. Customer Training Courses, call 1-800-843-3610 (within the United States only). Outside the U.S., customer should contact a Videojet subsidiary office or their local Videojetdistributor for more information.

Table of Contents

Compliance Information
For Customers in the U.S.A. . . . . . *i*
For Customers in Canada . . . . . *i*
Pour la Clientèle du Canada . . . . . *ii*
For Customers in the European Union . . . . . *ii*
EMC Directive . . . . . *iii*
Using Bought Out Parts for Use in an Equipment Installation . . . . . *iii*
Cabling . . . . . *iv*
Cables in Enclosures . . . . . *iv*
Cables Outside of Enclosures . . . . . *v*
Shield Termination . . . . . *v*
Communication Signals . . . . . *vi*
Contactors, Relays, Solenoid Valves etc . . . . . *vii*
Earthing . . . . . *vii*

Support and Training
Contact Information . . . . . *ix*
Service Program . . . . . *ix*
Customer Training . . . . . *x*

Chapter 1 — Introduction
Videojet 2300 Series Printer 1–1
About this Manual 1–2
Related Publications 1–2
Language Codes 1–2
Content Presentation 1–3
The Word Printer 1–3
Positional References 1–3
Units of Measurement 1–3
Safety Information 1–3
Additional Notes 1–4
User Interface Terminology 1–4
Abbreviations and Acronyms 1–5
Chapters in the Manual 1–6

Chapter 2 — Safety
Introduction 2–2
Safety Conventions Used in the Manual 2–2
Warning Statements 2–2
Caution Statements 2–3
Equipment Safety Guidelines 2–3
Placement of the Printer 2–4

Ink Safety Guidelines 2–4
Safety Warnings for 2300 Series Printers 2–7
Grounding and Bonding 2–7
Electrical Power/Air Supply 2–7
Other Important Guidelines 2–9
Medical Emergencies 2–9
Emergencies Involving Printer Ink 2–9

Chapter 3 — Main Parts

About the Printer 3–1
Print Area. 3–2
Main Parts 3–3

Chapter 4 — Installation

Unpack the Printer 4–1
How to Remove the Shipping Caps 4–2
How to Remove the Shipping Plate 4–6
Videojet 2340 4–6
Videojet 2351 and 2361 4–7
Installation Requirements 4–8
Functional Requirements 4–8
Other Requirements 4–9
Mounting Considerations 4–10
Mounting Bracket 4–12
How to Connect the Product Sensor 4–13
Introduction. 4–13
Type of Product Sensors 4–14
Default Settings. 4–14
How to Connect an Encoder 4–16
How to Connect to the Host Machine Interlocks 4–17
How to Set the Correct Air Pressure 4–18
How to Connect Data Communications 4–20
Port 1 4–20
Port 2 4–20
Stand-alone mode. 4–21
Network Mode 4–21
How to Set up Master/Slave Network 4–21
Master/Slave Benefits 4–21
Master/Slave Applications 4–22
Printer Communications 4–22
Physical Installation 4–23
Software Installation. 4–24

CLARiTY Configuration Manager 4–24
How to Install CLARiTY Configuration Manager 4–25

Chapter 5 — Printer Setup

Before you Turn On the Printer 5–1
Turn On the Printer 5–2
Insert New Ink Canister 5–4
Videojet 2300 Priming Procedures 5–4
How to Prime the 2340 Printer 5–5
How to Prime Videojet 2351 and 2361 Printer 5–12
How to Get High Quality Print 5–22
How to Connect PC to a 2300 Series Printer 5–22
CLARiTY Configuration Manager Parameters 5–23
How to Select the Correct Printing Mode 5–29
Setting the Speed in Fixed Speed Mode 5–30
Setting the Speed in Encoder mode 5–32
How to Set the Correct Print Direction 5–33
How to Enable or Disable the Printhead 5–34
How to Change the Self Cleaning Frequency of Operation 5–35
How to Enable the Use Debris Pad 5–37
How to Configure Master and Slave Units 5–38
Basic Configuration 5–38
Advanced Configuration 5–44
Using Master/Slave Mode 5–50
Group Job Select Mode 5–50
Group Control Mode 5–53

Chapter 6 — CLARiTY Operator Interface

Introduction 6–1
Home Page of CLARiTY 6–2
Screen Description 6–2
Icons 6–2
Data Entry Pad 6–5

Chapter 7 — Maintenance

Introduction 7–1
Routine Maintenance 7–2
Routine Cleaning 7–2
Scheduled Maintenance 7–3
Replacement Procedure 7–3
Shutdown Procedure 7–7

Normal Shutdown 7–7
Extended Shutdown. 7–7
Storage Shutdown 7–8
Draining the Printers 7–9
Videojet 2340 7–9
Videojet 2351 and 2361 7–17
Preparation for Shipping 7–26
Videojet 2351 and Videojet 2361 -
Preparing for Shipping (Wet - Distributor to End User) 7–28

Chapter 8 — Troubleshooting

Fault and Warning Messages 8–2
Warnings 8–2
Faults 8–3
15 Way I/O Connector 8–4
Fault and Warning Messages 8–6
Troubleshooting the Faults 8–27
The Print is not in the Correct Position on the Box 8–27
The Printed Image is Back to Front or Upside Down 8–31
The Printer is Printing but is not Purging and Cleaning 8–32
The Print Quality is Poor. 8–34
The Printer is Error Free but not Printing an Image -
Batch Count not Incrementing 8–37
The Printer is Error Free but not Printing an Image -
Batch Count is Incrementing 8–39
The Touchscreen Does Not React When Touched 8–40
The Printer Reports Ink Level Sensor Errors 8–41
Ink is Seeping Over The Printhead Front Plate or
Knife Edge 8–42
Ink Leak Issues 8–44
Monoblock Vacuum Test Procedure 8–45
Test Results and Solutions 8–45
Poor Quality or Missing Print at the Bottom of the
Printed Image 8–46
Print is Missing From the Top of the Printed Image. 8–46
The LCD Does not Power Up 8–48
The Back Light is On But LCD Image is Not Displayed. 8–49
CLARiTY Reports 'The Battery is Flat' 8–50
The CLARiTY Screen of a Videojet Printer Reports
'Set Printhead Code' 8–50

Chapter 9 — Illustrated Parts List

Air Valve Assembly 9–4
Reservoir Air Filter Assembly 9–5
Can Present Microswitch Assembly 9–6
Ink Shut Off Valve Assembly 9–7
Standard LCD Display and Touchscreen 9–8
Integral Product Sensor 9–9
Ink Reclaim Filter Assembly 9–10
Vent Cap Assembly 9–11
Main Controller PCB 9–12
Power Supply 9–13
Power Switch. 9–14
Spare Flash Card. 9–14
Air Regulator Filters. 9–15
Vent Fitting 9–15
Videojet 2300 Series Printer Part Numbers. 9–16
Accessories 9–16
Kits 9–18
Tubing Kit 9–18
Hardware Kit 9–18
Swab Cleaning Kit 9–19
Cleaning Kit 9–19

Appendix A — Frequently Asked Questions

How Does the Ink Delivery System Work? A–1
What Does the Ink Shut Off Valve Do?. A–3
Videojet 2351 and Videojet 2361 . . . . . A–3
Videojet 2340, Videojet 2351 and Videojet 2361 . . . . . A–3
When I Replace the PCB or Flashcard,
How Do I Restore The Original Parameters?. A–4
How to Clone the Printers. A–4
How is the Ink Level in the Reservoir Calculated? A–6
How Do I Clean the Printhead? A–9
Automatic Cleaning of the Printhead A–9
How to Empty a Videojet 2361 Printhead for
Re-priming. A–11
How to Set Up a Master/Slave Network? A–11

Glossary

Introduction

1

This chapter contains the following topics:

- Videojet 2300 Series Printer
- About this Manual
- Content Presentation
- Abbreviations and Acronyms
- Chapters in the Manual

Videojet 2300 Series Printer

The 2300 Series printers are large character inkjet printers that print accurate and high resolution text, alphanumeric codes, barcodes and graphics. The user interface has quick and easy-to-use features.

The 2300 Series printers have an autopurge feature that can flush the printhead nozzles before every print, at production line speeds. This feature prevents:

- Operator intervention
- Production line/printing interruptions
- Ink wastage

This feature helps the printers to sustain good print quality across prints.

About this Manual

The Videojet 2300 series Service Manual is written for the service technicians. The service manual provides the procedures to install, maintain, and troubleshoot the printer correctly.

Related Publications

The following manuals are available for reference:

- Videojet 2300 series Operator Manual (Part Number 463000).

Language Codes

When you order these manuals, make sure to add the 2-digit language code at the end of the part number. For example, the Dutch version of this manual is part number 463000-09. The Table 1-1 lists the language codes that identify the translated versions of this manual.

Code	Language	Availability (see note)	
01	English (US)	*	+
02	French	*	
03	German	*	
04	Spanish (Universal)	*	
05	Portuguese Brazilian	*	
06	Japanese	*	
07	Russian	*	
08	Italian	*	
09	Dutch	*	
10	Chinese (Simplified)	*	
11	Arabic	*	
15	Norwegian	*	
17	Swedish	*	
18	Danish	*	
19	Greek	*	
21	English (UK)	*	+

Table 1-1: List of Language Codes

Code	Language	Availability (see note)	
23	Polish	*	
24	Turkish	*	
26	Hungarian	*	

Table 1-1: List of Language Codes (Continued)

Note: *The following symbols in the 'Availability' column indicates the following:*

(*) - The symbol indicate the availability of Operator Manual
(+) - The symbol indicate the availability of Service Manual
For more information, consult your Videojet distributor or subsidiary.

Content Presentation

The manual contains different types of information like safety guidelines, additional notes, User Interface (UI) concepts and so on. To help you identify the different types of information, different writing styles that are used in this manual. This section describes these writing styles.

The Word Printer

The word printer indicates the Videojet 2300 printer, from this point forward, in this manual.

Positional References

Unless stated to the contrary, positions and directions such as left, right, front, rear, to the right and to the left given with respect to the printer when viewed from the front.

Units of Measurement

This manual uses metric units of measurement. The equivalent English measures are included in parenthesis. For example, 240 mm (9.44 inches).

Safety Information

The safety information includes warning and caution statements.

Warnings

The warning statements indicate hazards or unsafe practices which may result in severe personal injury or death.

For example:

Warning

The cleaning agent is poisonous if taken internally. Do not drink. Seek medical attention immediately if ingested.

Caution

The caution statements indicate hazards or unsafe practices that can result in damage to the equipment.

For example:

Caution

Do not fit or remove any connector on the printer when the power is on, otherwise the printer may get damaged.

Additional Notes

Notes provide additional information about a particular topic.

For example:

Note: *You can set the password protection for some functions to prevent any access that is not authorized.*

User Interface Terminology

All the elements of the User Interface (UI) are written in italics. For example: The *Stop* button.

Abbreviations and Acronyms

Abbreviation	Expansion
EAN	European Article Number
EMC	Electromagnetic compatibility
PC	Personal Computer
PCB	Printed Circuit Board
PNP	Positive-Negative-Positive
USB	Universal Serial Bus

Table 1-2: Abbreviations and Acronyms

Chapters in the Manual

This manual is divided into 10 chapters. An introduction to the topics that each chapter covers is shown in Table 1-3.

Chapter No.	Chapter	Description
1.	Introduction	Contains the information about this manual and writing styles used in this manual.
2.	Safety	Contains the safety and hazard information
3.	Main Parts	Describes the main parts of the printer
4.	Installation	Describes the procedures to install the 2300 series printer and configure the CLARiTY software.
5.	Printer Setup	Describes the setup procedures of the printer before operation.
6.	CLARiTY Operator Interface	Describes the CLARiTY user Interface
7.	Maintenance	Contains the maintenance procedures of the printer.
8.	Troubleshooting	Contains the troubleshooting procedures
9.	Illustrated Parts List	Contains the illustrated parts list and spare parts list.
10.	Appendix A	Contains the answers to frequently asked questions

Table 1-3: List of Chapters

Safety

2

This chapter contains the following topics:

- Introduction
- Safety conventions used in this manual
- Equipment safety guidelines
- Placement of the printer
- Ink safety guidelines
- Safety Warnings for 2300 Series Printers
- Medical emergencies

Caution

EQUIPMENT DAMAGE. Read this chapter thoroughly before attempting to install, operate, service, or maintain this equipment.

Warning

PERSONAL INJURY. The intended use of this printer is to print information directly onto a product. Follow the installation and operating instructions at all times. Only trained personnel should carry out maintenance or repair. Use of this equipment for any other purposes may lead to serious personal injury.

Introduction

The policy of Videojet Technologies Inc. is to manufacture non-contact printing/coding systems and ink supplies that meet high standards of performance and reliability. Therefore, we employ strict quality control techniques to eliminate the potential for defects and hazards in our products.

The safety guidelines provided in this chapter are intended to educate the operator on all safety issues so that the operator can operate the printer safely.

Safety Conventions Used in the Manual

Specific safety information is listed throughout this manual in the form of Warning and Caution statements. Pay close attention to these statements as they contain important information that help in avoiding potential hazards to yourself or to the equipment.

Warning Statements

- Warning statements are used to indicate hazards or unsafe practices that may result in personal injury or death.
- They have a triangular symbol with an exclamation mark to the immediate left of the text.
- They are always preceded by the word “Warning”.
- They are always found before the step or information referring to the hazard.

For example:

Warning

PERSONAL INJURY. The next step, “Cleaning the Printhead,” must be performed by service or maintenance personnel. Qualified personnel are those who have successfully completed the training courses, have sufficient experience with the printer, and are aware of the potential hazards to which they are exposed.

Caution Statements

- Caution statements are used to indicate hazards or unsafe practices that can result in equipment or property damage.
- They have a triangular symbol with an exclamation mark to the immediate left of the text.
- They are always preceded by the word “Caution”.
- They are always found before the step or information referring to the hazard.

Example:

Caution

EQUIPMENT DAMAGE. Never turn off the printer by switching the AC power switch to the Off (O) position. Before pressing the Off key, allow the printer to complete the three and a half minute shutdown sequence. Failure in following this procedure prevents the printer from drawing the ink in the ink return line, back into the reservoir. This may cause the ink to dry in the ink return line, resulting in problems when you turn the printer on again.

Equipment Safety Guidelines

This section contains important safety guidelines pertaining to the operation and handling of the printer and associated equipment.

Warning

PERSONAL INJURY. While performing maintenance or repair work, disconnect the mains supply unless it is absolutely necessary to leave the supply on while carrying out adjustments.

Warning

PERSONAL INJURY. All electrical wiring and connections must comply with applicable local codes. Consult the appropriate regulatory agency for further information.

Warning

PERSONAL INJURY. Do not, under any circumstances, remove or obstruct any warning, caution, or instruction labels present on the printer.

Placement of the Printer

Warning

PERSONAL INJURY. Do not place the printer in a hazardous location. Hazardous locations might create an explosion, leading to personal injury.

Hazardous locations, as defined in the United States, are those areas that may contain hazardous materials in a quantity sufficient to create an explosion. These are defined in Article 500 of the National Electrical Code ANSI/NFPA 70–1993.

Outside the United States, you must ensure compliance with all local regulations regarding equipment placement in potentially hazardous locations.

Ink Safety Guidelines

This section provides important safety guidelines pertaining to the use and handling of inks. Read the appropriate MSDS for more information.

Warning

PERSONAL INJURY. Always observe the following safety guidelines when using or handling inks.
For continued protection against possible fire hazard, use only Videojet supplies with a flash point no lower than -22 °C (-8 °F) and boiling point no lower than 56 °C (133 °F).

Warning

PERSONAL INJURY. The printer ink is volatile and flammable. It must be stored and handled according to local regulations. Work only in areas with good ventilation.

Warning

PERSONAL INJURY. Do not smoke or use a naked flame in the vicinity of the printer ink.

Immediately after use, remove any tissue or cloth that becomes saturated with the ink. Dispose all such items in accordance with the local regulations.

Only full bottles are recommended for use when replenishing ink; partially filled bottles must be disposed in accordance with the local regulations.

Warning

PERSONAL INJURY. Do not smoke when you are near the printer or printhead. If the printer exhaust fumes are subjected to an ignition source, it may result in an explosion or fire.

Warning

PERSONAL INJURY. Wear safety glasses with side shields (or equivalent eye protection) when handling ink. If it splashes on your eyes, flush your eyes with water for 15 minutes and consult a physician immediately.

Warning

PERSONAL INJURY. Wear butyl rubber gloves when handling ink. Avoid contact with skin and mucous membranes (nasal passage, throat). Upon contact with skin, remove any contaminated clothing and wash the area with soap and water. Consult a physician if irritation persists.

Warning

PERSONAL INJURY. Do not pour the ink into sinks, sewers, or drains. Waste disposal must comply with local regulations. Contact the appropriate regulatory agency for further information.

Warning

PERSONAL INJURY. Read and understand the Material Safety Data Sheet (MSDS) before using the printer ink. An MSDS exists for each type of ink. The appropriate sheet or sheets are supplied along with the shipped product.

Ensure that you retain all MSDSs for future reference in case you need to consult a physician regarding an ink-related accident. Additional copies of MSDSs are available upon request, and can be obtained by contacting the Videojet Customer Service Department at 1-800–843–3610. Outside the U.S., customers should contact a subsidiary Videojet office or their local Videojet distributor.

Warning

PERSONAL INJURY. Certain inks are flammable and must be stored appropriately. Storage must comply with local regulations. Contact the appropriate regulatory agency for further information. The label on the bottle or the MSDS indicates if a particular ink is flammable or not.

Safety Warnings for 2300 Series Printers

Grounding and Bonding

Warning

PERSONAL INJURY. Always prevent static discharge from occurring. Use proper Grounding and Bonding methods.

Warning

PERSONAL INJURY. Always bond conductive equipment together with approved cables to maintain them at the same potential and minimize static discharge. For example, printhead to metal service tray.

Electrical Power/Air Supply

Warning

PERSONAL INJURY. Before opening or removing any printer covers, ensure that the mains power is disconnected and compressed air supplies are switched off.

Warning

PERSONAL INJURY. This equipment must be installed with a locally positioned mains supply isolation device. This can be either a plug and socket or a switch disconnected or circuit breaker in accordance with IEC 60947-3 or IEC 60947-2.

Warning

PERSONAL INJURY. Always isolate equipment from the mains and remove mains power connector to the printer before attempting any maintenance or repair on any part of the product.

Warning

PERSONAL INJURY. Before connecting compressed air supply to Videojet 2340, 2351 and 2361, ensure that the air regulator is switched OFF.

Warning

PERSONAL INJURY. Ensure that any cables from the printer are secured to avoid chance of movement into walkways and becoming a trip hazard.

Warning

PERSONAL INJURY. There will be sections of the Videojet 2340, 2351 and 2361 control board that will be permanently powered via the on-board lithium battery - therefore it is essential that the board should never be placed onto nor stored in or on any conductive surface (including conductive, plastic bags etc.) as this would flatten the battery and/or potentially result in battery overheating. The battery cannot be replaced by the customer.

Warning

PERSONAL INJURY. Ensure that all external energy sources are isolated from the printer before opening the outer casing. This includes the mains power cable and I/O cable assembly (if used).

Other Important Guidelines

Warning

PERSONAL INJURY. Do not point the printhead directly and in close proximity to the eyes, unless the printer is switched off and isolated from the mains and compressed air supplies.

Warning

PERSONAL INJURY. Read any warning or hazard information supplied with the ink or consumable products. When using any chemicals, always wear protective gloves and only use in well-ventilated areas.

Warning

PERSONAL INJURY. The Videojet 2340, 2351 and 2361 printer is supplied with warning symbols for power supply and compressed air. If any part of these symbols become damaged, worn or removed they must be immediately replaced.

Medical Emergencies

This section provides important medical information in case of an accident.

Warning

In the event of a medical emergency, contact a physician immediately.

Emergencies Involving Printer Ink

If the incident involves the printer ink, carry the bottle and/or MSDS with you to the physician's office. These items contain important information that the physician may require, to provide the precise medical treatment.

Main Parts

3

This chapter contains the following topics:

- About the printer
- Main Parts

About the Printer

The Videojet 2340, 2351, and 2361 printers are auto-purging ink jet printers. The design of the printer enables the printer to print high resolution text, barcodes and graphics. These printers are easy to use and cost effective.

The 2300 series printers use the CLARiTY operator interface as a standard. The interface is a part of the printer (that is you are not required to connect the printers to an external Personal Computer (PC) for normal operation). The icons in the interface provide easy navigation to the operator. The Slave units do not have the interface.

An external PC is required only to configure the printer and download the messages into the printer.

The auto-purging printhead makes sure that there is a consistent and high quality code during the production period. This printhead does not use more than the required amount of ink. The ink is supplied through non pressurised, ink canisters that are installed in the canister chute which make the printers clean and easy to use.

Print Area

The print area for the 2300 series printers is shown in Table 3-1.

Printer Type	Print Area
Videojet 2340	17 mm x 2000 mm
Videojet 2351	53 mm x 2000 mm
Videojet 2361	70 mm x 2000 mm

Table 3-1: Print Area

Warning

There will be sections of the Videojet control board that will be permanently powered via the on-board Lithium battery. It is essential that the board should never be placed onto nor stored in or on any conductive surface (including conductive, plastic bags etc.) as this would flatten the battery and/or potentially result in battery overheating.

Caution

If the control board or printer is to be stored for any extended duration, battery link LK5 can be removed and put onto only one of the link posts until the board/printer is ready to be used. This reduces battery drain. The battery has an expected five years life span at normal ambient temperatures (0-40° C).

Main Parts

The following shows the main components of the printer with the connection.

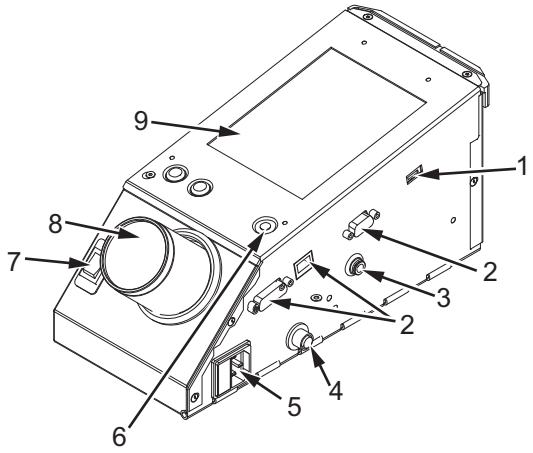

1. USB Port
2. I/O, Ethernet and Communications Connectors
3. External Product Sensor (photoeye)
4. Air Inlet Connector
5. Mains Power Inlet
6. Printer Status LED
7. Power Switch
8. Ink Canister
9. CLARiTY Operator Interface

Figure 3-1: Printer Parts - Videojet 2340

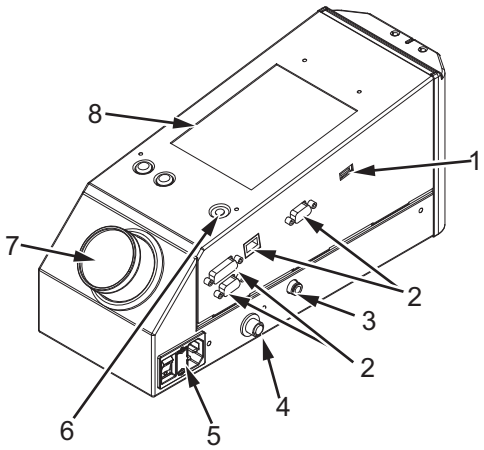

1. USB Port
2. I/O, Ethernet and Communications Connectors
3. Air Inlet Connector
4. External Product Sensor (photoeye)
5. Mains Power Inlet and Switch
6. Printer Status LED
7. Ink Canister
8. CLARiTY Operator Interface

Figure 3-2: Printer Parts - Videojet 2351 and 2361

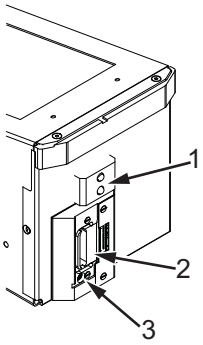

1. Internal Product Sensor **3. Debris Collection Pad**
2. Printhead

Figure 3-3: Printhead - Videojet 2340

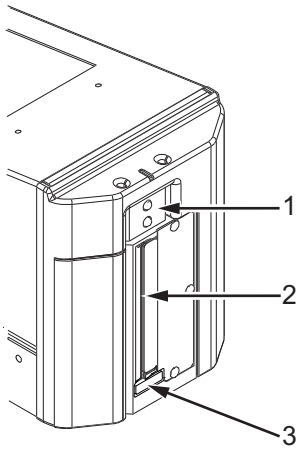

1. Internal Product Sensor **3. Debris Collection Pad**
2. Printhead

Figure 3-4: Printhead - Videojet 2351 and 2361

Installation

4

This chapter contains the following topics:

- List of parts present in the printer package
- The procedure to remove the shipping caps and shipping plate
- Installation requirements
- Mounting considerations
- The procedure to connect print signals, encoder, host machine interlocks, correct air pressure, data communications, and Master/ Slave Network
- The procedure to install the CLARiTY

Unpack the Printer

Unpack the printer, and make sure that all the parts listed in the Table 4-1 are present, and are not damaged.

Printer Type	Contents
Videojet 2340 Printer	CD-ROM including CLARiTY Configuration Manager
	Air Regulator
	QA Documentation and CE Certificate
Videojet 2351 Printer	CD-ROM including CLARiTY Configuration Manager
	Air Regulator
	QA documentation and CE certificate
Videojet 2351 Slave Printer	CD-ROM including CLARiTY Configuration Manager
	Air Regulator
	QA documentation and CE certificate

Table 4-1: Printer Package List

Printer Type	Contents
Videojet 2361 Printer	CD-ROM including CLARiTY Configuration Manager
	Air Regulator
	QA documentation and CE certificate
Videojet 2361 Slave Printer	CD-ROM including CLARiTY Configuration Manager
	Air Regulator
	QA documentation and CE certificate

Table 4-1: Printer Package List (Continued)

How to Remove the Shipping Caps

Warning

PERSONAL INJURY. Make sure that the mains power cable is disconnected and the compressed air is switched off before opening or removing printer covers.

Do the following tasks to remove the shipping caps:

1 Using a screwdriver remove the screws (six screws for Videojet 2340 and two screws for Videojet 2351 and 2361) that are attached to the cover, and open the printer (see Figure 4-1 and Figure 4-2).

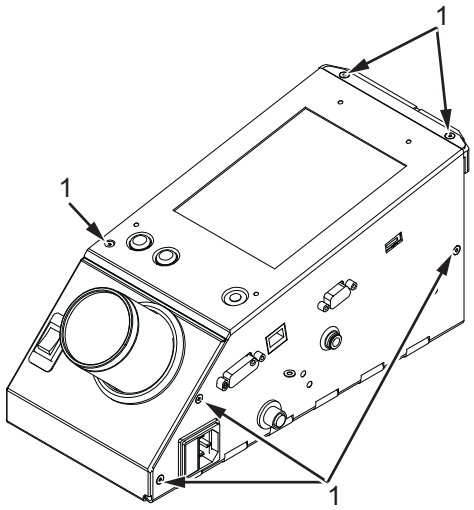

1. Screws (x6)

Figure 4-1: Videojet 2340 Printer

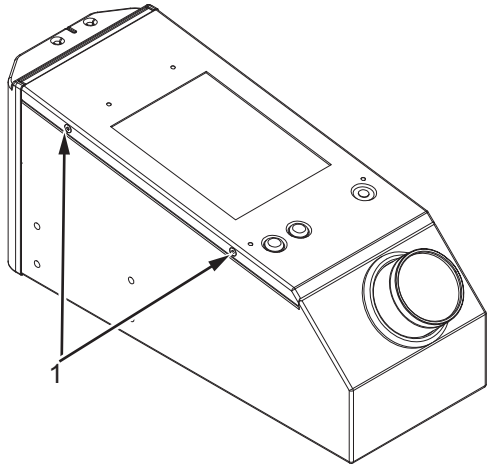

1. Screws (x2)

Figure 4-2: Videojet 2351 and 2361Printer

2 Remove the shipping cap from the ink reservoir (see Figure 4-3). Store the cap at the indicated place for future use.

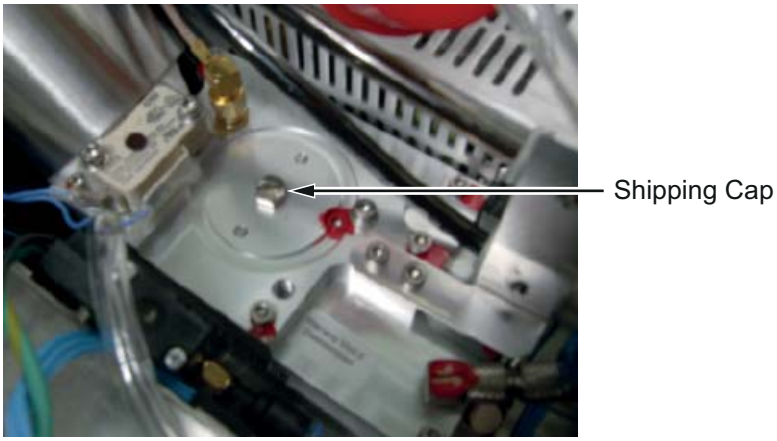

Figure 4-3: Shipping Cap

3 Remove the stainless steel fitting (Item 1, Figure 4-4) from the end of the polyurethane pipe (Item 2).

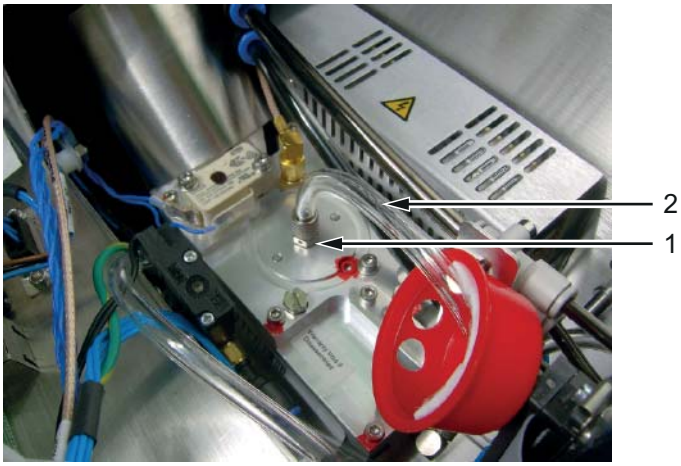

1. Stainless Steel Fitting
2. Polyurethane Pipe

Figure 4-4: Stainless Steel Fitting

4 Replace the shipping cap with the stainless steel fitting. Make sure that the nylon washer is placed between the stainless steel fitting and the Videojet ink reservoir.

Note: *The stainless steel fitting has a vent hole on one edge.*

5 Fit the polyurethane pipe onto the stainless steel fitting and hand tighten the knurled flange nut (Item 1, Figure 4-5).

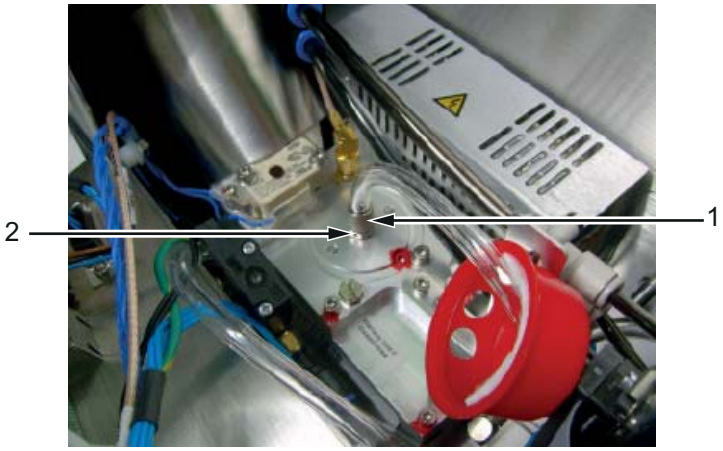

1. Knurled Flange Nut
2. Vent Hole

Figure 4-5: Fit the Pipe

6 Refit the vent cap under the two retainers on ink reservoir.

Note: *Make sure that the vent hole on the stainless steel fitting is in line with material lining of vent cap. The material lining is present to capture ink mist vented from reservoir spreading into the body of the printer.*

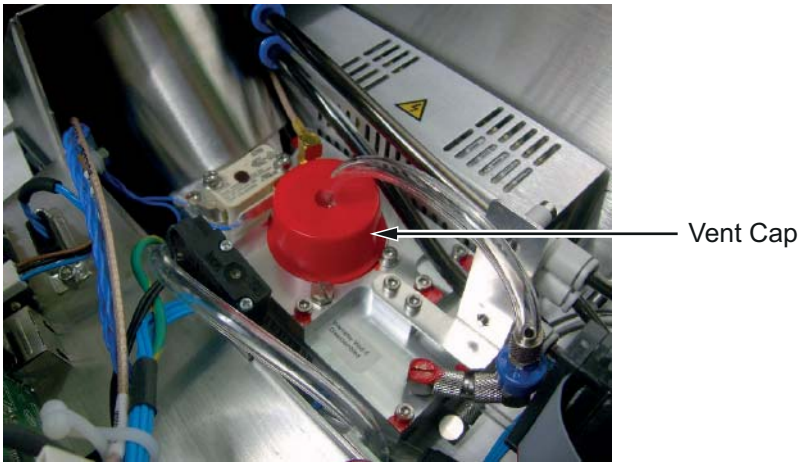

Figure 4-6: Vent Cap

How to Remove the Shipping Plate

Videojet 2340

A new Videojet 2340 printer has a protective shipping plate covering the nozzle array.

Do the following tasks to remove the shipping plate:

1. Remove the screws from the front and carefully remove the shipping plate as shown in Figure 4-7.

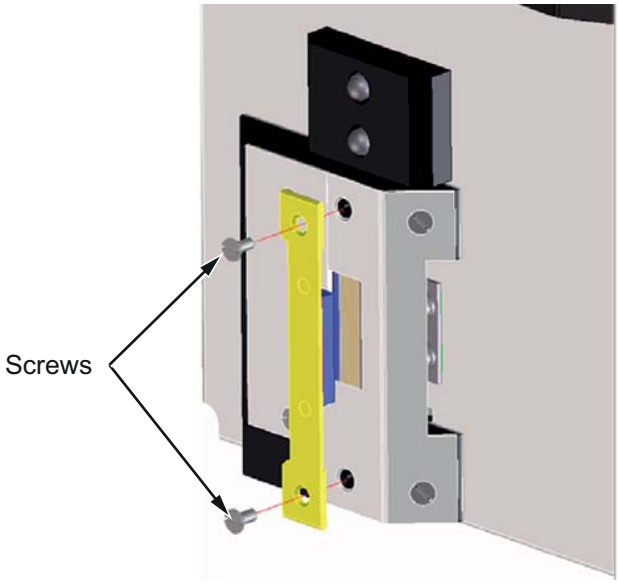

Figure 4-7: Remove Shipping Plate

2. Replace the screws into the printhead after removing the shipping plate.

   Store the shipping plate for the following reasons:

   - To protect the printer when it is transported.
   - To store the printer when it is unused for a long time.

   ***Note**: When you do not want to use the printer for some time, refit the clean shipping plate carefully taking great care not to slide or wipe the print face.*

Videojet 2351 and 2361

The shipping plate should be removed during priming for Videojet 2351 and 2361

Do the following tasks to remove the shipping plate:

1 Remove the two screws, that secure the shipping plate to the front of the printhead (see Figure 4-8).

Figure 4-8: Remove Protection Plate

2 Remove and retain the shipping plate along with orifice sealing plate for future use.

Figure 4-9: Shipping Plate with Sealing

Installation Requirements

To install 2300 series printer successfully, the following inputs must be available at the site of the printer installation:

Functional Requirements

The Table 4-2 provides the functional requirements of the 2300 series printer.

Inputs	Requirements
Power	100-240 VAC, 1~50/60Hz, 1.5-0.5A
Compressed Air	6 Bar, dry, uncontaminated
Print Signal	See “Print Signal” on page 4-8.

Table 4-2: Installation Requirements

Print Signal

Print signalling can be achieved through the following methods:

- A 24 VDC signal from a PNP sensor (available in diffuse sensor kit or retro-reflective sensor kit that is supplied separately)
- The volt free print signal contacts, standard with every 2300 series printer.

  Note: *All 2300 series printers contain an integral product sensor. However, if the integral sensor is used, the printer cannot perform the printhead self-cleaning cycle.*

It is highly recommended that a correctly screened, EMC Compliant, remotely mounted retro-reflective product sensor is used wherever possible.

Dust and dirt are the main causes of premature printhead failure. The autopurge feature of the printer automatically cleans the printhead, keeping it at its best operating condition. This feature also helps increase the life of the printhead and ensures high quality printing.

Operating with a remotely mounted sensor will allow sufficient time for the self-cleaning printhead cycle to activate between products as long as the sensor is located in such a position that any product takes at least 0.4s to travel from the print sensor to the print line. The distance will change depending on the fastest speed of the line but the time is an absolute. Sufficient spacing should be allowed so that there is at least 0.4s between the products to allow automatic printhead cleaning.

Note: *Ink will not flow from the canister, if the self-cleaning printhead cycle is not operating.*

Other Requirements

In addition, a retro reflective sensor will reduce the possibility of false print triggering, caused by product undulations, which can occasionally occur with a diffused sensor. This is called the Print Gate function.

Sufficient space is required to mount the printer allowing easy access to the ink canister and the CLARiTY touch screen.

If the product conveying equipment varies in speed, the Videojet encoder kit will be required.

If barcodes are to be printed or high quality graphics are to be printed then the use of an encoder to measure speed variations is critical for correct operation.

Warning

It is essential that the Videojet 2300 printers are used with a fully screened encoder. Failure to do so may result in equipment damage and product malfunction. Any equipment damage resulting from the use of incorrect or unscreened encoders will not be covered by the equipment warranty.

A suitable storage area for replacement ink canisters, dry with a temperature between 2°C - 35ºC (35°F - 95°F) is required. Note that the ink has a shelf life of 12 months.

If the printer is not being used, it should also be stored between 2°C - 35ºC (35°F - 95°F) and if not used for more than two weeks, the unit should be drained.

Mounting Considerations

The 2300 series printer is shipped dry that is all the ink has been drained from the system after final test.

In the shipped/dry state, the printer can be freely handled and positioned in any orientation. However, extreme care should be taken around the printhead area during handling.

The printer will require priming before operation. This process is described in "Videojet 2300 Priming Procedures" on page 5-4.

The printhead is designed to operate only in a vertical orientation and once filled with ink, care must be taken to ensure that it is kept in its upright position.

The upright position presents a vertical printhead array, which is designed to print onto vertical substrates, for example, side wall of a cardboard case or tray.

The Table 4-3 provides the height of the vertical printhead array for 2300 series printers.

Printer	Printhead Array (Height)
Videojet 2340	17 mm
Videojet 2351	53 mm
Videojet 2361	70 mm

Table 4-3: Printhead Array Height

Mounting holes are provided on the printer sidewall, to attach to a conveyor. To view the mounting holes of Videojet 2340 printer see Figure 4-10 on page 4-11. To view the mounting holes of Videojet 2351 and Videojet 2361 printer, see Figure 4-11 on page 4-11.

To view the Videojet 2340, Videojet 2351 and Videojet 2361 outline dimensions, refer to Operator Manual.

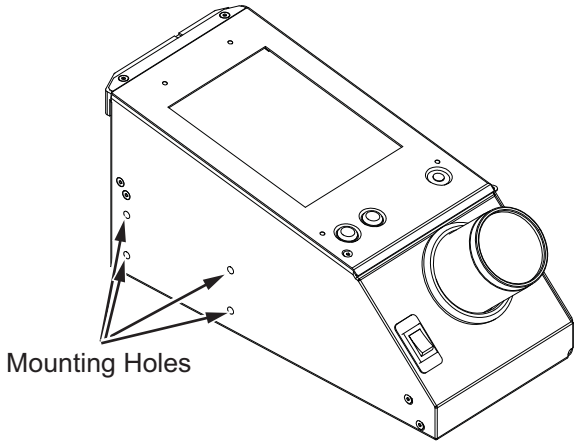

Figure 4-10: Videojet 2340 Mounting Holes

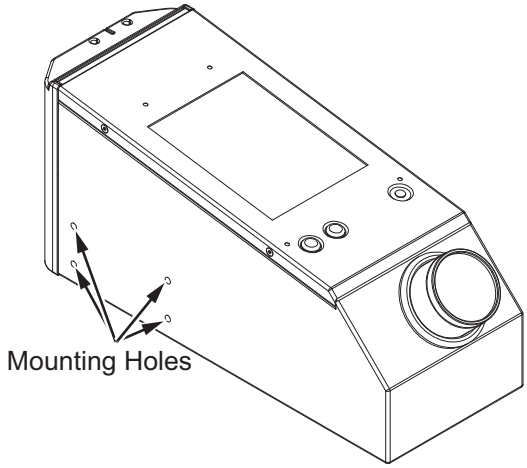

Figure 4-11: Mounting Holes - Videojet 2351 and Videojet 2361

Mounting Bracket

It is recommended to mount the printer to the side of the conveyor using the printer bracket (Figure 4-12).

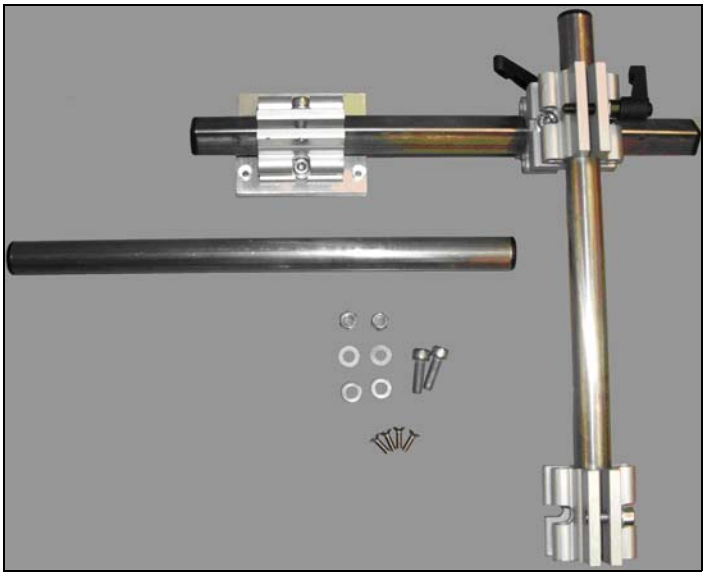

Figure 4-12: Printer Mounting Bracket

The mounting bracket for the 2300 series printers has been specifically designed to allow quick and easy installation.

The features of the mounting bracket are:

- The mounting bracket enables the printer to be adjusted in the vertical and horizontal planes, to allow a variety of products to be accommodated.
- User friendly locking handles on the mounting bracket allow the position of the printer to be quickly and easily adjusted during production set up.
- The upright pole of the bracket may be angled up to +/- 20 degrees from the vertical axis (Y axis in Figure 4-12) to accommodate inclined conveyors. This is a rotation of the printer about the Z axis, in the X-Y plane.

The printer must not be pitched up or down in the opposite direction (i.e. a rotation about the X axis in the Y-Z plane)

How to Connect the Product Sensor

Introduction

The Videojet 2300 series are supplied with an integral product sensor, located on the front of the product, directly above the printhead (Figure 4-13 and Figure 4-14).

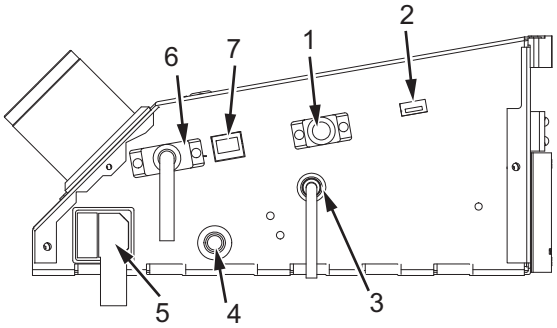

1. RS232 Communications Port
2. USB Port
3. External Product Sensor (photoeye)
4. Air Inlet Connector
5. Mains Input Connector
6. I/O Connector
7. Network Port

Figure 4-13: Connections for Print Signal - Videojet 2340

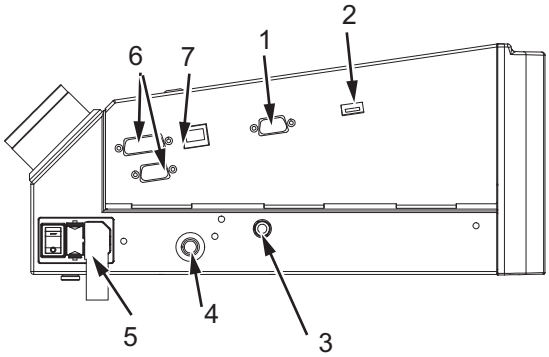

1. RS232 Communications Port
2. USB Port
3. Air Inlet Connector
4. External Product Sensor (photoeye)
5. Mains Input Connector
6. I/O Connector
7. Network Port

Figure 4-14: Connections for Print Signal - Videojet 2351 and 2361

This sensor allows out of the box operation with no additional interfacing required. However, it is highly recommended to use the external product sensor to allow activation of the self-cleaning printhead cycle.

A connector for an external product sensor is located on the side of the Videojet printer (see Figure 4-13).

Type of Product Sensors

2300 series printers are configured to use any of the following product sensors:

- Integral product sensor (recommended for print gating and troubleshooting only).
- Optional retro-reflective sensor.
- Diffuse beam print sensor (standard).
- Alternatively, via volt-free or 24V contacts accessible with the optional I/O cable.

Default Settings

The table provides the default settings of 2300 series printers.

***Note**: These settings are CLARiTY Configuration Manager settings and cannot be set at the CLARiTY touch screen.*

Printers	Sensor Type
Videojet 2340	External
Videojet 2351	External
Videojet 2361	External

Table 4-4: Default

As default the setting for initializing the print cycle is Positive Edge (leading edge of the product) triggering.

Figure 4-15 and Figure 4-16 on page 4-15 show the connections required for 'volt-free' or 24 V operation utilizing the optional I/O cable.

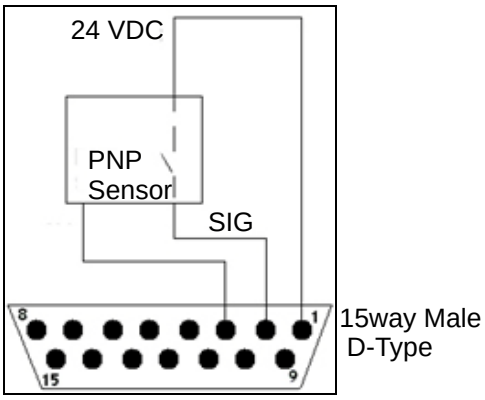

Figure 4-15: PNP Sensor (Print Sensor) Wiring

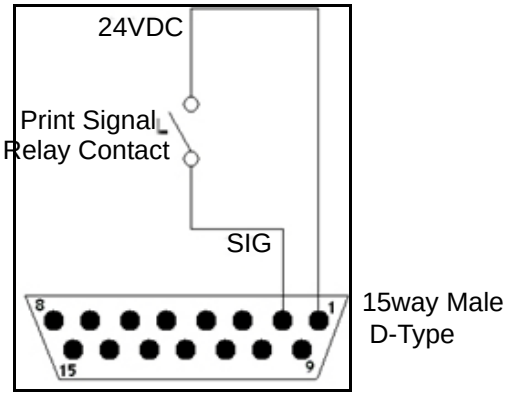

Figure 4-16: Volt-free Contact Wiring

In addition, the 15-way D-Type (male) connector, located on the side of the Videojet printer, is also used for I/O connectivity, e.g. warning and fault outputs, encoder, line selection.

The Remote Product Sensor connector, located on the side of the Videojet printer. See Figure 4-17 for the following connections:

- 10-30 VDC
- No connection
- 0 V
- Normally Open Output

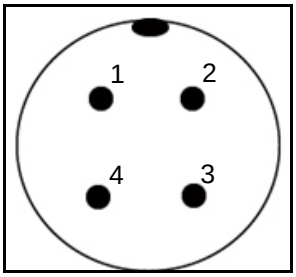

1. 10-30 VDC
2. No connection
3. 0V
4. Normally Open Output

Figure 4-17: Remote Product Sensor Connector

How to Connect an Encoder

Encoders are used to track the speed of the conveyor and must be connected via the 15 way D-type I/O connector mounted on the side of the Videojet printer (see Figure 4-13 on page 4-13).

An encoder kit, is supplied complete with an I/O cable that connects directly into the 15 way D-type connector, located on the side of the Videojet printer.

In addition, the 15-way-D-Type (male) connector, located on the side of the printer is also used for I/O connectivity, for example, warning and fault outputs, encoder, line connection.

Note: *The encoder settings are CLARiTY Configuration Manager parameters and can not be set at the CLARiTY touch screen.*

Figure 4-18 shows the 15 way D-Type pin connections.

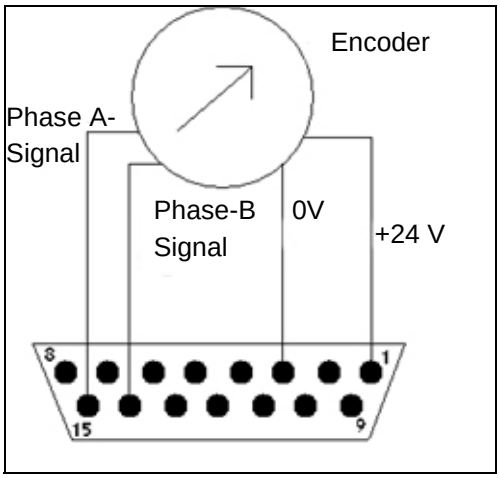

Figure 4-18: Encoder Wiring

How to Connect to the Host Machine Interlocks

The 15-way D-type connector, located on the side of the 2300 series printers (see Figure 4-13 on page 4-13) also has connections for a variety of useful interlock and annunciation signals for use with the host packaging machine or conveying system.

Note: *The power (current) supplied from the* Videojet *printer is very low, 100mA Maximum. Therefore, the internal power supply should not be used for powering indicator lamps (Fault, Warning, and Print) and a separate power supply should be used to provide power.*

Using CLARiTY Configuration Manager the outputs can be configured to provide additional functionality in order to help integration with outside systems.

Table 4-5 summarizes these inputs and outputs

Pin	Purpose
1	24V DC Supply
2	Print (PNP)
3	0V DC
4	Line Select 0 (IN)
5	Line Select 1 (IN)
6	Line Select 2 (IN)
7	Fault Out (COM)
8	Fault Out (N/O) Output 1
9	Warning Output (PNP) Output 2
10	Spare Output (PNP) Output 3
11	Line - Strobe (IN)
12	0V DC
13	Line Select 3 /External Print Gating Sensor (IN)
14	Encoder Channel B (IN)
15	Encoder Channel A (IN)

Table 4-5: Input and Output Pins

Note: *The fault contacts (7, 8) change state as the printer enters and exits a fault condition.*

How to Set the Correct Air Pressure

Note: *Before connecting compressed air supply to the 2300 series printer, ensure the air regulator control knob has been turned off.*

The air regulator (see Figure 4-19) should be mounted as close to the printer as possible and in a position where the control knob and pressure gauge are easily accessible.

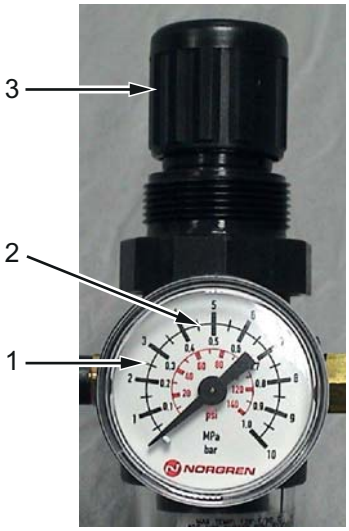

1. Videojet 2340 2.5 Bar
2. Videojet 2351/Videojet 2361 4.5 Bar
3. Control Knob

Figure 4-19: Air Regulator

Note: *Air pressure can be viewed on the controller diagnostics (on printer touchscreen, navigate to Tools* > *Diagnostics* > *Printhead* > *Inputs* > *Pressure Sensor).*

Connect dry, uncontaminated compressed air to the 6-mm connector of the air regulator.

A second air line should be connected between the remaining 6-mm 'Air Out' push fitting on the air regulator and the 6-mm Air In push fitting located on the side of the Videojet printer.

Turning the air regulator control knob clockwise will increase the air pressure to the Videojet printer.

Note: *The air pressure should be set in accordance to the printer model as shown in Figure 4-19 on page 4-18 and Table 4-6.*

Warning

Operating outside the recommended air pressure may cause damage to the printer.

Make sure to use one air regulator per printhead. If you connect a regulator between printheads, this will result in insufficient air supply if both printheads purge/print at the same time. Low air pressure will cause multiple problems including insufficient vacuum to reclaim the ink.

The table provides the recommended air pressure for 2300 series printers.

Printers	Air Pressure
Videojet 2340	2.5 bar
Videojet 2351	4.5 bar
Videojet 2361	4.5 bar

Table 4-6: Recommended Air Pressure

Moisture filters located in the air regulator bowls should be replaced on a regular basis, to ensure air to the Videojet printer remains dry and free from contamination.

How to Connect Data Communications

Communications ports are provided with every 2300 series printers:

RS232 serial communications port x 2 (9-way male D-type connector, located on the side of the Videojet 2351 and 2361 printer).

Note: *Videojet 2340 has only one RS232 Serial Communications Port (Port 1).*

Port 1

Pin	Connection
1	Data Carrier Detect (DCD)
2	Receive Data (Rx)
3	Transmit Data (Tx)
4	Data Terminal Ready (DTR)
5	Ground
6	Data Set Ready (DSR)
7	Request To Send (RTS)
8	Clear To Send (CTS)
9	Ring Indicator (RI)

Table 4-7: Pins of Port1

Port 2

Pin	Connection
2	Receive Data (Rx)
3	Transmit Data (Tx)
5	Ground

Table 4-8: Pins of Port 2

Ethernet 10baseT/100baseTX high speed network port (RJ45 connector, located on the side of the Videojet).

Videojet is primarily designed to communicate with CLARICOM standard Package Coding Management Systems, such as CLARiSOFT Image Design Software.

CLARiTY operating system can be configured to work in one of two modes:

- Stand-alone mode
- Network mode

Stand-alone mode

Download to CLARiTY using a standard PC null-modem cable (twisted 9-way D-type, female to female) connected between PC COM1 port and CLARiTY RS232 port of the 2300 series printer or by Ethernet connection.

Network Mode

1. Create images on a PC using CLARiSOFT
2. Download to CLARiTY using Ethernet TCP/IP network and CLARiNET network software.
3. Images (Jobs) can be requested from the CLARiTY touch screen or can be selected and downloaded from any networked PC workstation that is running CLARiNET.

How to Set up Master/Slave Network

Master/Slave Benefits

Videojet Master/Slave capability is an enhancement to the Videojet product range that allows you to control up to four Videojet printers from a single CLARiTY operator interface.

A mixture of Videojet 2340, Videojet 2351 or Videojet 2361 printers can be used in Master/Slave network, resulting in:

- An easier to use coding system - simpler setup of multiple printers
- Reduced printer setup time - a single point of setup
- A reduction in setup mistakes from human error - only one entry of data rather than several
- A lower cost coding solution when multiple printers are required to fulfill a coding application through the use of the new Videojet Slave printer without LCD.
- All achieved without an additional controller or PC on the production line.

Master/Slave Applications

Master/Slave applications are typically used when:

- Coding more than one side of a box is required
- When two or more printheads are required to code onto the same side of the box
- When control for multiple printers is required from a single location

In addition Master/Slave networks can create a very cost effective solution where the print area required is higher than that of a single printhead.

Examples: Videojet 2361 printhead (70 mm) + Videojet 2340 printhead (17 mm) = Print height of 87 mm, both printers controlled from a single CLARiTY screen

Or

Videojet 2361 printhead (70 mm) + Videojet 2351 head (53 mm) = Print height of 123 mm, both printers controlled from a single CLARiTY screen

Or

Videojet 2361 printhead (70 mm) + Videojet 2361 head (70 mm) = Print height of 140 mm, both printers controlled from a single CLARiTY screen

Master/Slave Terminology

Level 1: Group Job Select, allows connection of up to four standard 2300 series printers (with LCD's), with Job selection available only from the printer configured as the Master. This mode greatly reduces potential Operator errors when you enter variable data.

All other functions are performed at each local printer's LCD panel.

Level 2: Group Control, allows connection of one standard Videojet (with LCD) acting as the Master, to up to three Videojet Slave (with or without LCD) printers.

All Job selection, Setup, Diagnostics and Error reporting are performed at the Master printer only.

Printer Communications

Initially, the printer will be configured through CLARiTY Configuration Manager using RS232 connectivity. The Master/Slave group can be configured through RS232 or Ethernet connectivity.

Physical Installation

When only two Videojet printers (one Master, one Slave) are required and there is no requirement to connect the Master/Slave group to an external network, a two printer interconnection cable may be used to connect directly between the Ethernet ports of the two printers.

All other cables (e.g. I/O cable) must be connected as for standalone printers.

Where more than two printers are to be connected together or connection to a network is required, the two Printer Connection Box or 3-4 Printer Connection Box complete with Ethernet patch cables is required.

The Connection Box allows up to four Videojet printers (one Master and three Slaves) to be connected together, allowing them to share common encoder and print signals as well as providing Ethernet connectivity via the integral network switch (hub).

In addition, the connection box also allows the group of printers to be connected to a wider Ethernet network.

Figure 4-20 shows a two printer Connection Box, showing the five port connections for the network switch, integral I/O cables (2 off) and encoder lead.

Figure 4-20: Connection Box

Software Installation

CLARiTY Configuration Manager

As coding and labelling equipment becomes increasingly versatile for a wider range of applications, the number of variable parameters within a printer can become very large.

Although printers are pre-programmed with so-called Default Values, as the breadth of applications increase, the likelihood of the Defaults being ideal for an application reduces. This can give rise to a large and cumbersome menu tree of options for users to contend with.

The CLARiTY Configuration Manager aims to remove this problem, leaving the printer with a small and manageable number of operating variables, whilst maintaining the application flexibility of the machine.

Figure 4-21, shows a typical CLARiTY Configuration Manager screen.

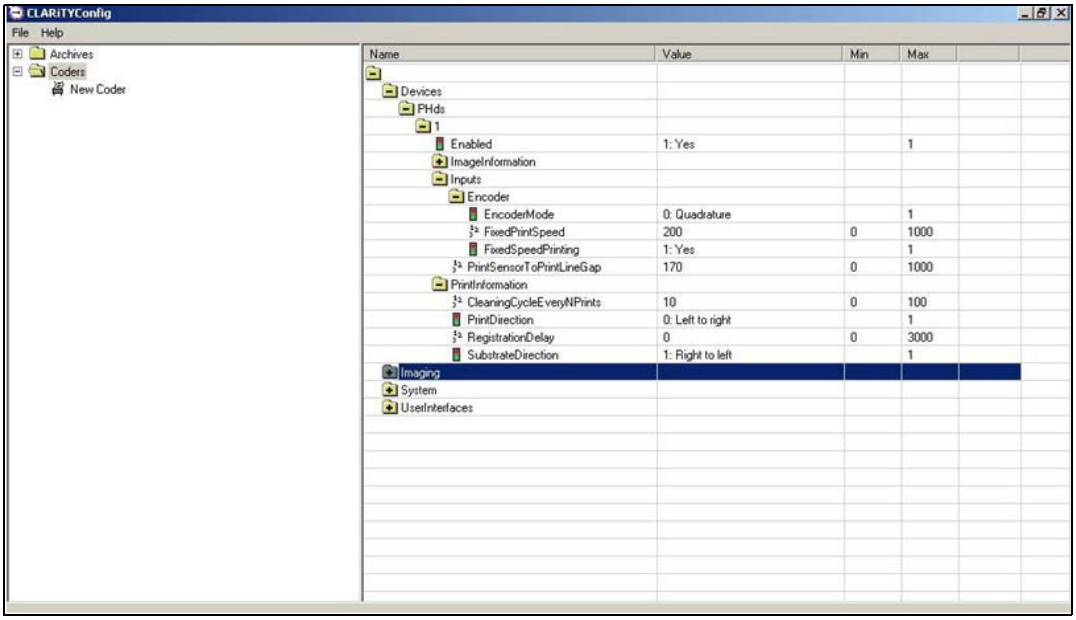

Figure 4-21: CLARiTY Configuration Manager Screen

Most printer variables are set at the point of installation. These variables are set to tailor the printer to the application.

In the majority of cases, once set, these variables only need to be changed if the application for the printer changes.

The CLARiTY Configuration Manager is a user-friendly PC software program, which provides the following basic features:

- Complete set of printer variables
- Save/Retrieve a set of variable values to a PC file for later/repeat use, or for taking backup or restoring of printer setup parameters.
- Download a set of variable parameters to the printer's CLARiTY control system for non-volatile (permanent) memory storage in the printer
- Upload set of variable parameters from the printer, for review/compare/modification

As a result, the 2300 series printer only retains a small number of operating variables for the user to change.

In addition to making the CLARiTY Operating system less complicated and more user friendly, an increased level of printer system security is also added, as configuration variables can only be accessed from a connected PC.

If a Videojet printer operates in stand-alone mode (i.e. not networked), the PC should be linked for the period of uploading and downloading of the configuration variables only. The PC should then be removed.

In a networked environment, system administrators have the ability to directly access the printer, whilst Line Operators can access operating variables on the CLARiTY operating system only.

How to Install CLARiTY Configuration Manager

Do the following tasks to install CLARiTY Configuration Manager:

1. Insert the CD-ROM with the CLARiTY Configuration Manager. The installation routine will automatically start.
2. Follow the on-screen instructions.

   Note: *If auto run facility is disabled in your PC, the installation routine will not start automatically.*
3. Click *Start*, followed by *Run* and then type into the dialog box - D:\setup.exe followed by *OK*

Note: *D: is the drive letter of the PCs CD-ROM drive. If your CD drive is different, substitute the letter D with the appropriate drive letter.*

Printer Setup

5

This chapter describes the following:

- Turn on 2300 series Printer
- The priming procedures of 2340, 2351, and 2361 printers
- How to Get High Quality Print
- CLARiTY Configuration Manager Setup
- Using Master/Slave Mode

Before you Turn On the Printer

The following checks must be made before you turn on the 2300 series printer:

1. The printer is mounted in its working position.

   Note: *Mount the printer level front to back and no greater than 20 degrees from side to side.*

2. The printer is connected to the main power supply.
3. The printer is connected to the compressed air supply.
4. The air regulator is turned on and set to:
   - 2.5 bar for the Videojet 2340
   - 4.5 bar for the Videojet 2351
   - 4.5 bar for the Videojet 2361
5. The internal ink reservoir shipping cap is removed and replaced with the air pipe and stainless steel fitting.
6. The vent cap is correctly fitted and aligned.
7. The printhead shipping plate is removed.

Turn On the Printer

Do the following tasks to turn on the 2300 Series Printer:

1. Press the power switch on the rear of the unit (for Videojet 2340) to turn on the printer (see Figure 5-1).

   Note: *Power switch is located on the side of the unit for Videojet 2351 and 2361.*

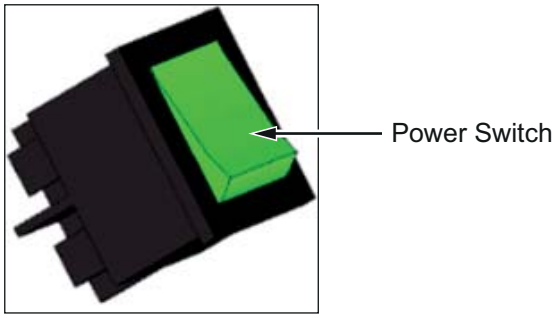

Figure 5-1: Power Switch

2. During the startup sequence, the printer performs a number of self-diagnostic checks. These checks take approximately 90 seconds to complete.
3. When the self-diagnostic checks are complete, the CLARiTY Home page appears (see Figure 5-2).

Figure 5-2: CLARiTY *Home Page*

4 If there is no ink in the system, CLARiTY displays that there is a fault in the system (see Figure 5-3).

Figure 5-3: Fault Message

5 Touch *FAULT* on the title bar. The fault message Out Of Ink appears.

Figure 5-4: Out of Ink Message

6 Touch *FAULT* again. The fault report is displayed.

Figure 5-5: FAULT Report

7 Insert the ink canister then follow the procedure to prime the printer.

Insert New Ink Canister

Refer to procedure 'Add Ink' in the chapter 'Equipment Operation' in Videojet 2300 series Operator Manual.

Videojet 2300 Priming Procedures

Videojet 2300 series printers are shipped in a dry state. The printer must be primed after you fill the printer with the ink to function correctly. Priming removes any air pockets within the printhead.

Note: *This procedure is necessary to get the best print resolution from the printer.*

The filling and priming procedures are different for each type of printer.

Note: *Make sure that the correct priming procedure for the correct Videojet model is performed.*

How to Prime the 2340 Printer

Note: *The priming operation is necessary for the continuous performance of the printer and the procedure must be followed carefully.*

Note: *The procedure is displayed as step by step on screen instructions and requires user confirmation at each step to continue.*

Do the following tasks to prime the 2340 printer:

1. Make sure that a new ink canister is inserted into the printer.
2. Make sure that the air pressure is set to 2.5 Bar.
3. Navigate to *Tools* > *Setup* > *Consumables*. The Consumables screen appears (see Figure 5-6).

Figure 5-6: Prime Printhead

4 Touch *Prime Printhead.* CLARiTY displays the first Priming Printhead screen. The screen displays the message 'Filling Ink Reservoir' (see Figure 5-7).

Note: *Follow the instructions on the screen.*

Figure 5-7: Priming Printhead Message

5 Follow the instruction displayed on the screen (see Figure 5-8) and remove the two screws that hold the front cover of the printhead front plate (see Figure 5-9 on page 5-7).

Figure 5-8: Priming Printhead Message

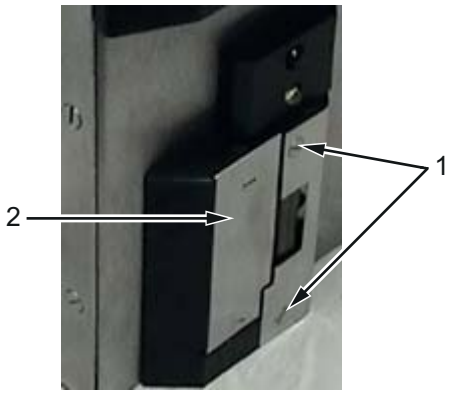

1. Screws
2. Front Cover

Figure 5-9: Remove Front Cover

6 Remove the drainage screw by three turns (see Figure 5-10 and Figure 5-11 on page 5-8).

Note: *You must be careful and prevent any contact with the printhead shown in Figure 5-11 on page 5-8.*

Figure 5-10: Printhead Message

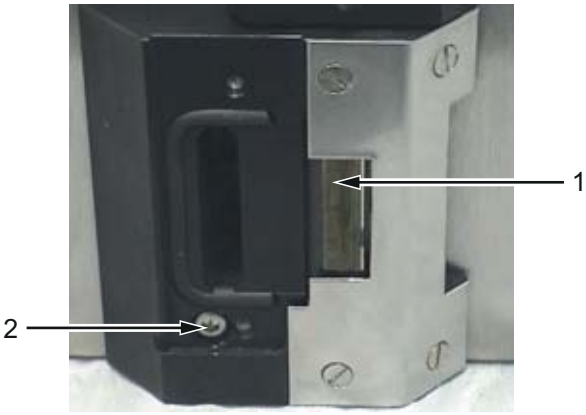

1. Printhead Jetting Face
2. Drainage Screw

Figure 5-11: Printhead Jetting Face

7 Insert a small piece of 4-mm drainage pipe into the hole in the anodized aluminium protection plate (see Figure 5-12).

Note: *The drain hole is found below the front block.*

Figure 5-12: 2340 Front End View

8 Put a small canister or piece of absorbent cloth below the drainage pipe to collect any spilled fluid (see Figure 5-13).

Figure 5-13: Priming Printhead Message

The printer will then start cycling at a high repeat rate, while the printhead is priming (see Figure 5-14).

Figure 5-14: Priming Printhead Wait Message

9 After one minute (approximately), CLARiTY screen appears as shown in Figure 5-15.

Figure 5-15: Priming Printhead Message

10 Tighten the drainage screw (see Figure 5-16) within 15 seconds.

Note: *The drainage screw must be tight before the prime cycle stops.*

Figure 5-16: Priming Printhead Message

CLARiTY displays a message to replace the front cover (see Figure 5-17).

Figure 5-17: Priming Printhead Complete

11 Carefully remove the drainage pipe from underneath the front block and remove any excess ink where the tube is plugged in and also around the drainage screw.

Note: *Extreme care should be taken around the printhead area.*

12 Replace the front plate and attach with the two screws.

The priming procedure is complete and you can start the printer operation.

How to Prime Videojet 2351 and 2361 Printer

Figure 5-18 shows the printer components required in the priming process.

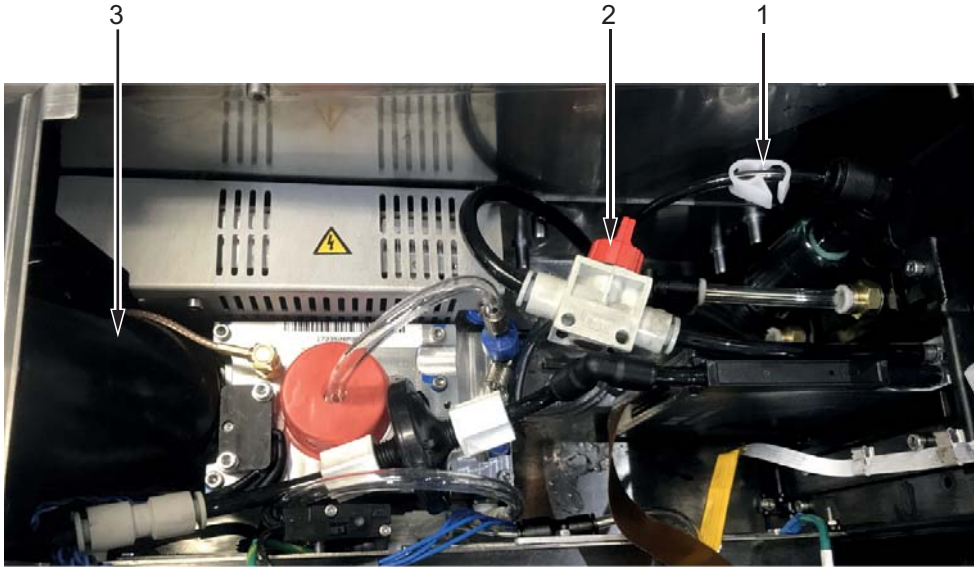

1. Pinch Clamp **3. Ink Canister**
2. Red Ink Valve

Figure 5-18: Internal Components

Note: *The priming operation is necessary for the continuous performance of the printer and the procedure must be followed carefully.*

Note: *The procedure is displayed as step by step on screen instructions and requires user confirmation at each step to continue.*

Note*: An empty ink canister is required during the priming procedure.*

Read the messages that appear on the CLARiTY Operator Screen to help you through the process. The CLARiTY Operator Screen displays the action that is required in each step.

Do the following tasks to prime the 2351/61 printer:

1. Switch on the printer and allow the printer to start. Then the Home page of CLARiTY appears.
2. Make sure that a new ink canister is added to the printer.
3. Make sure that the air pressure is set to 4.5 Bar.

4 Navigate to *Tools* > *Setup* > *Consumables*.

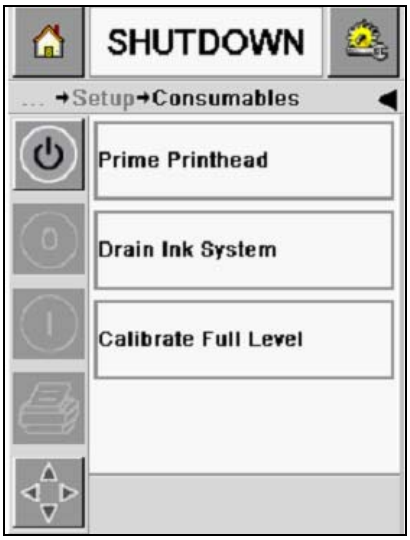

Figure 5-19: Priming Screens

5 Select *Prime Printhead.* Read the notes on the following screen carefully (see Figure 5-20). Touch the *Yes* button to continue to the confirmation screen.

Figure 5-20: Filling Ink Reservoir Message

6 Touch *No* to exit or touch *Yes* to continue to the next screen.

Figure 5-21: Confirmation for Filling Ink Reservoir Message

7 Confirm the instructions on the screen (see Figure 5-22), and then touch OK when ready.

Note: *Follow the instructions in the Priming Printhead screen to make sure that the procedure is complete.*

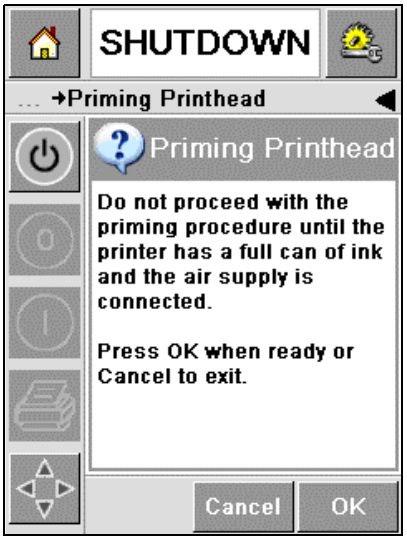

Figure 5-22: Confirmation of Ink and Air Supply Message

8 If shipping plate is already installed, continue from Step 9 on page 5-16.

If shipping plate is not installed:

a. Remove the two screws that attach the nozzle plate to the printhead as shown in Figure 5-23.

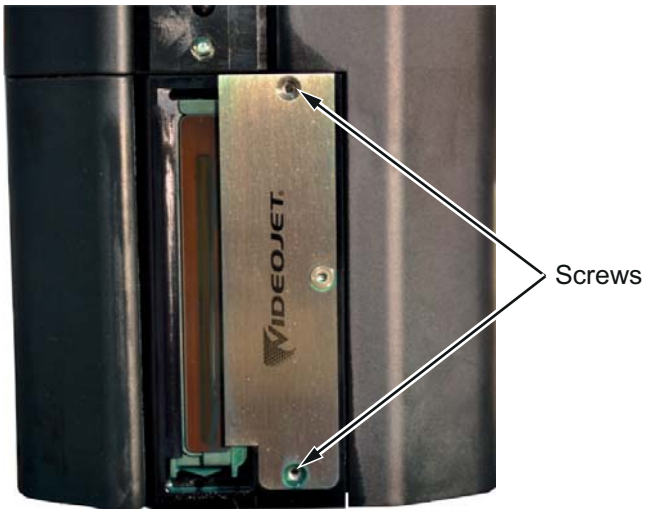

Figure 5-23: Remove Nozzle Plate Securing Screws

b. Install the shipping plate with orifice sealing on the nozzle plate using retained screws (see Figure 5-24 and Figure 5-25 on page 5-16).

Figure 5-24: Install Shipping Plate Message

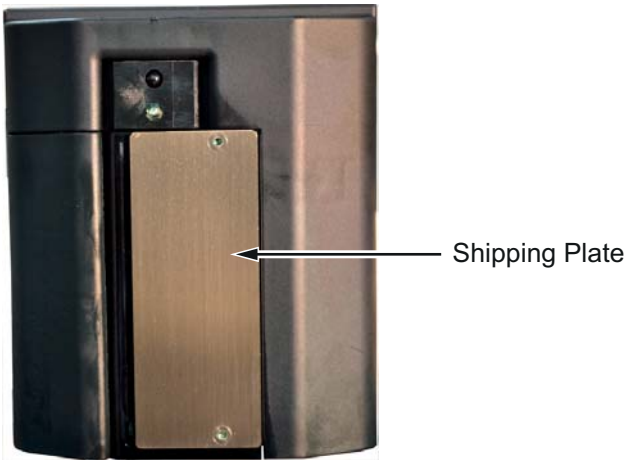

Figure 5-25: Printhead with Shipping Plate

9 Confirm the shipping/priming plate is installed and open the printer cover by removing the two screws. Touch OK when complete (see Figure 5-26).

Note: *Follow the order of the instructions on the screen to complete the procedure correctly.*

Figure 5-26: Remove Cover Screws Message

10 Close the pinch clamp on reclaim tube at top of the filter (see Figure 5-27).

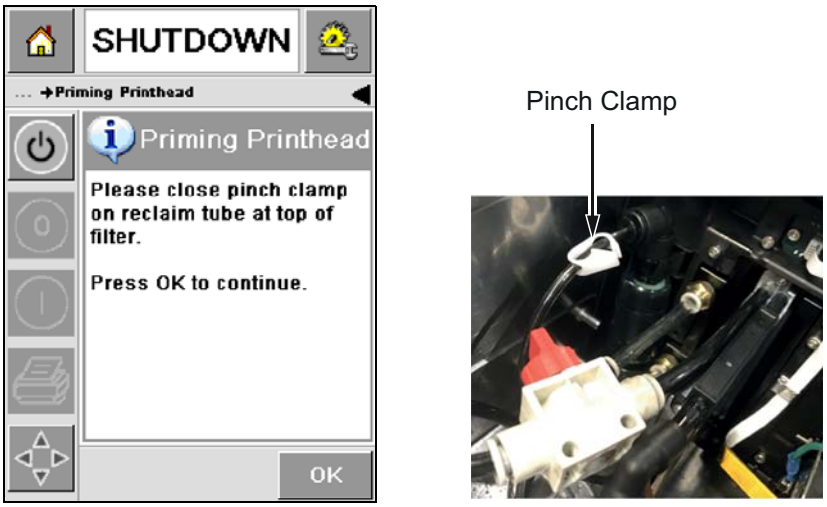

Figure 5-27: Close Pinch Clamp

11 Open the red ink valve (see Figure 5-28).

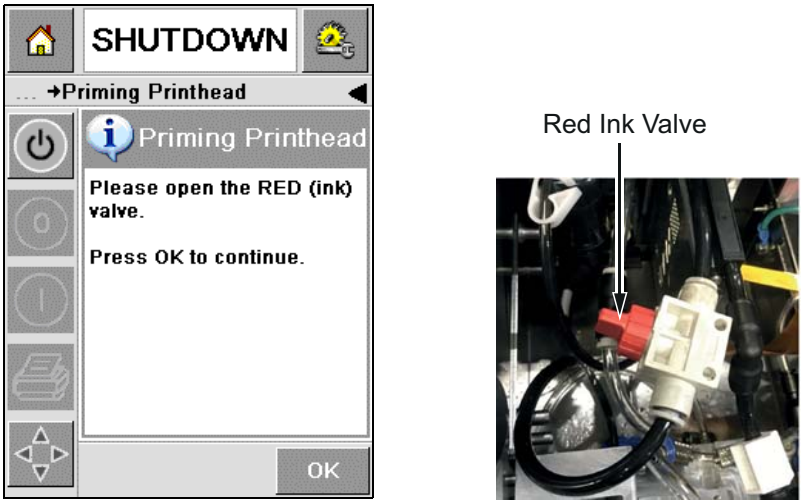

Figure 5-28: Open Red Valve Message

12 Touch OK to start filling the ink reservoir. This step will take approximately 3 minutes and will inform the user when complete (see Figure 5-29).

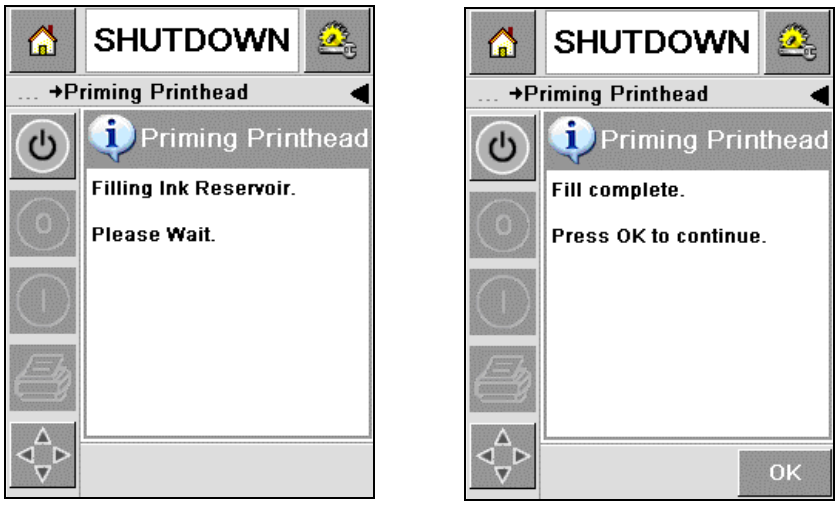

Figure 5-29: Fill Ink Reservoir Message

13 Touch OK to start the priming process (see Figure 5-30).

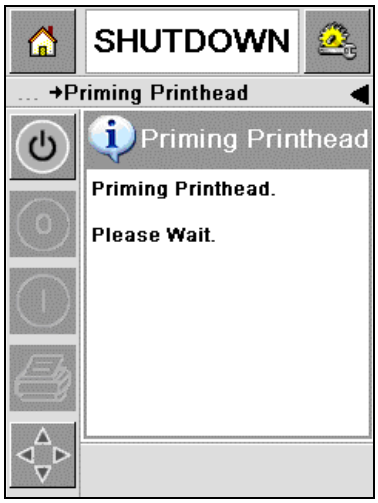

Figure 5-30: Priming Printhead Message

14 Close the red ink valve (see Figure 5-31).

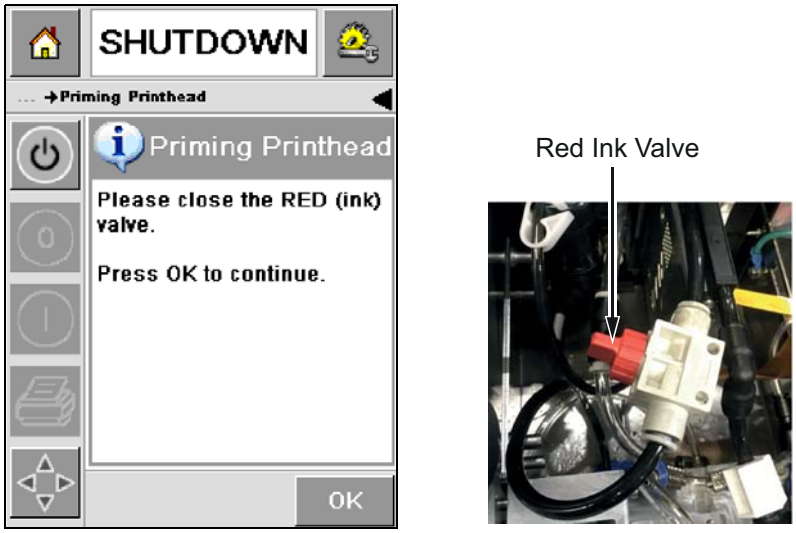

Figure 5-31: Red Ink Valve Closure

15 Open the pinch clamp from reclaim tube at the top of filter (see Figure 5-32).

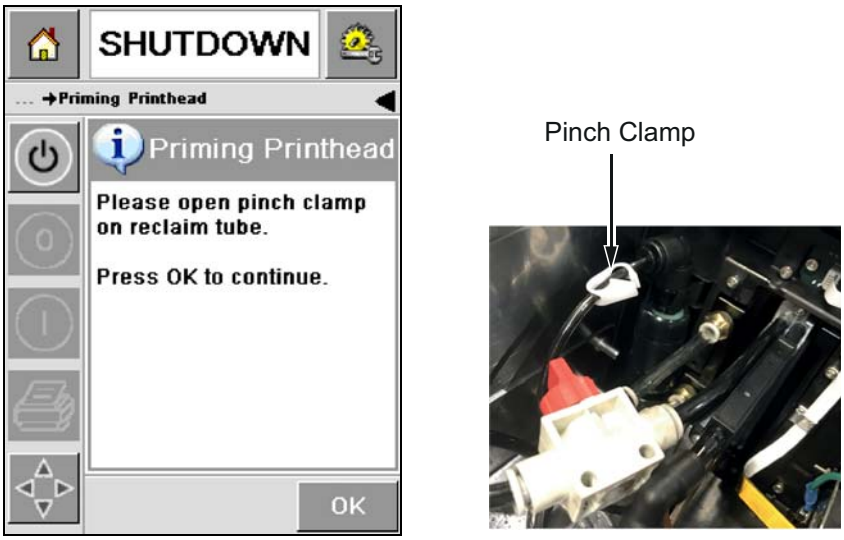

Figure 5-32: Open Pinch Clamp Message

16 Remove the shipping plate. Follow the instructions below to remove the shipping plate.

Figure 5-33: Shipping Plate Removal Message

a. Remove the two screws, that secure the shipping plate to the front of the printhead (see Figure 5-34).

Figure 5-34: Remove Shipping Plate

b. Remove and retain the shipping plate along with orifice sealing plate for future use.

Figure 5-35: Shipping Plate with Sealing

17 Confirm the shipping plate is removed and close the printer cover using screws. Touch OK to exit (see Figure 5-36).

Figure 5-36: Priming Complete Message

The printer is primed and can start the operation.

How to Get High Quality Print

Refer to the Chapter Equipment Operation of Videojet 2300 Operator Manual.

How to Connect PC to a 2300 Series Printer

Do the following tasks to connect a PC to a 2300 Series printer:

1. Use the null-modem cable and connect the PC COM1 port to the CLARiTY controller.
2. Run the CLARiTY Configuration Manager on the PC.

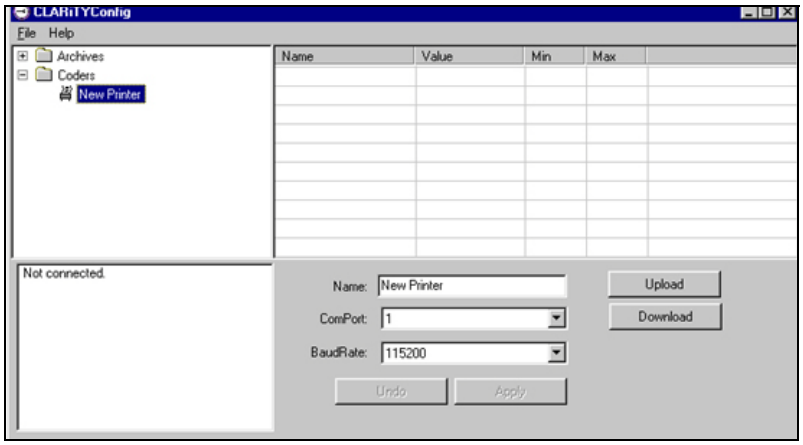

Figure 5-37: Connect the Printer

3. Wait for the printer status pane (at the bottom left of the window) to report Connection Active. If the status just displays *Not connected* (as shown in Figure 5-37), then disable or shut down any other applications running on the PC that are using the COM port.
4. The coder icon turns green, after the printer status pane reports Connection Active.
5. Press the *Upload* button the progress of the operation will be displayed in the status pane.
6. The list of folders containing the configuration parameters will appear in the parameter listing (in the right hand frame of the Configuration Manager).
7. By opening the required folders, and editing the individual parameters, for example: Registration, Print direction and so on, changes can be made to the operation of the printer.

CLARiTY Configuration Manager Parameters

This section details all of the parameters that can be found in release 11 of the CLARiTY Software 402080.

Refer to the Chapter Equipment Operation of Videojet 2300 printers. As the functionality changes these parameters may also change. Details of these changes can be found in the release notes for the software. Where identical parameters are used for different elements (for example: for Com1, Com2), only one set is explained.

Parameter	Comment
EnableFilterMonitoring	Determines whether the printer monitors the filter. When set to the default *yes*, the filter life is monitored. When set to *no*, the Filter Change Required warning will not be reported.
FilterServiced	This parameter is triggered by the service engineer when a filter is replaced. This action indicates to the printer that the filter has been replaced and resets the filter monitoring.
UseDebrisPad	Indicates that a debris collection pad is used to help maintain the cleanliness of the reclaim path. If this parameter is set to Yes, the printer monitors the service life of the pad and prompts the user to replace the pad when required.
Enabled	Either enables or disables the printhead operation.
Mirrored Image	When set to *yes* the printer print a mirrored image.
PrintOrientation	Sets the orientation of the print to 0° or 180°
ResetImageSequence	When using Image Separators, this determines whether the sequence resets on the printer going Offline or continues from the image last printed.
EncoderMode	Quadrature is the preferred default option but single phase is permitted for legacy installations.
EncoderNumberof Lines	This must match the number of lines or pulse the encoder used gives on one revolution.
EncoderWheelDiameter HMM	The diameter of the encoder wheel used in 0.01 mm i.e. 5305 would be for a wheel diameter of 53.05 mm

Table 5-1: CLARiTY Configuration Manager Parameters

Parameter	Comment
FixedPrintSpeed	The speed at which the object to be printed on will travel at in Fixed Speed Mode.
FixedSpeedPrinting	When set to Yes, fixed speed printing is enabled. Note that this is not recommended for high quality and barcode printing.
ExternalPrintSensor EdgeTrigger	This determines whether a rising or falling edge acts as the print sensor trigger.
PositiveEdgeLine Select	This determines whether the line select input is triggered by either a rising or falling edge.
PressureSensor Enabled	By switching this *off*, backwards compatibility for the control PCB is maintained for legacy printers that did not have the print sensor fitted. Not recommended for printers that do have the sensor fitted.
PrintGating	Used to prevent false printing; Print Gating requires a print signal and an additional print sensor being triggered in order for a print to be made. Print signals without the additional "box present" signal are counted as missed prints. Five missed prints will trigger a warning on the printer screen.
PrintGatingMode	Tells the system whether the "box present" signal is taken from an internal or external sensor.
PrintSensorMode	Sets the print sensor to be either from an external sensor or to use the internal sensor.
PrintSensortoPrintLineGap	A critical parameter which is the distance in mm between the print sensor and the print line of the printer.
OutputConfiguration	Allows each of the outputs to be configured for specific use by the user.
AutomaticCleaning Cycles	This enables/disables the automatic cleaning utility. It is only active if an external print trigger is used which is mounted at least 0.4s away from the print line.
IdleCleaningDelay	This is the time in minutes between automatic cleaning cycles when the printer is ONLINE but not printing. This parameter is not controlled by the Automatic Cleaning Cycles parameter. This time is the same when the printer is OFFLINE as well.

Table 5-1: CLARiTY Configuration Manager Parameters (Continued)

Parameter	Comment
MicropurgeAirBlastTime	The micropurge air blast time (mS) can be adjusted using this parameter. Unless absolutely necessary, this parameter should not be changed.
PrintDensity	The density of the print can be adjusted using this parameter in fixed steps; 100%, 70%, 50%, 33% and 25%. Below 100% the printer will use correspondingly less ink as well as being able to print at a faster maximum speed. I.e. at 50% print density the printer can at twice the 100% print density speed. Note that an encoder must be used for this capability.
PrintDirection	The direction of the product moving across the printer is set here.
PrintsPerCleaning Cycle	This is the number of prints between automatic print cycles. It is recommended that this figure be reduced to the smallest number that is practicable keeping in mind the environment and routine maintenance of the reclaim line filters and collector.
RegistrationDelay	If required a registration delay can be entered here. It is recommended that the registration be built into the job image to maintain flexibility on a job by job basis.
BarCodeFineAdjust	To use this parameter correctly, which is used to fine tune the drop size to ensure optimum bar code print quality, a Bar Code Test Image should be printed. On inspection of this print, the lowest readable figure within the image should be entered into this parameter.
Day of Month Codes	These codes are the default codes for these sections. Other codes can be entered here. These codes correspond to their equivalents in the Date Field properties within CLARiSOFT.
Day of Week Codes	These codes are the default codes for these sections. Other coders can be entered here. These codes correspond to their equivalents in the Date field properties within CLARiSOFT.
Hour Codes	These codes are the default codes for these sections. Other coders can be entered here. These codes correspond to their equivalents in the Date field properties within CLARiSOFT.

Table 5-1: CLARiTY Configuration Manager Parameters (Continued)

Parameter	Comment
Minute Codes	These codes are the default codes for these sections. Other coders can be entered here. These codes correspond to their equivalents in the Date field properties within CLARiSOFT.
Week of Year Codes	These codes are the default codes for these sections. Other coders can be entered here. These codes correspond to their equivalents in the Date field properties within CLARiSOFT.
Year of Decade Codes	These codes are the default codes for these sections. Other coders can be entered here. These codes correspond to their equivalents in the Date field properties within CLARiSOFT.
Enable Line Selection	With Line Selection enabled, job files can be allocated to different production lines in advance. This requires different inputs to be utilized to accept the line selection inputs as well as the synchronization signal and of course the print signal. In this way different jobs can be automatically selected depending on the inputs/pattern.
LineSelectionMode	This parameter determines the method of selection for the Line Select feature. Binary Inputs takes the decimal value of the 4 binary inputs when the sync. signal is seen to give the line number. Binary Hot Bits takes each bit for one line e.g. Bit 0 = Line 1 selected. The sync. signal is still required.
NumberofLines	This is the number of lines that are expected for the line select feature.
PrinterCodes - Factory ID	These values are used by CLARiSOFT to fill in automatically certain fields within the job file. The CLARiSOFT reference for this field is User ID
Line ID	The CLARiSOFT reference for this field is Line Reference
Machine ID	The CLARiSOFT reference for this field is Equipment Reference
Print Head Mapping - Printhead1	This should always be set to 1 for non-Master/ Slave coders and set to 1 for Master coders in Master/Slave systems. Slave Units should have this set to the printhead number required.
Printhead2	This parameter is only used by the Master as the map of the Slave Printers numbers.

Table 5-1: CLARiTY Configuration Manager Parameters (Continued)

Parameter	Comment
Printhead3	This parameter is only used by the Master as the map of the Slave Printers numbers.
Printhead4	This parameter is only used by the Master as the map of the Slave Printers numbers.
ResetPrintLimitOnStartup	This parameter is only effective when using allocations. This parameter determines whether the print limit is reset i.e. behave as though no print have been made previously or carry on with the current number of prints completed.
Shift Codes - Number of Shifts	It is possible to enter the number of shifts that are used in the customer's facility. Once entered each shift can be given its operating properties such as which days are worked and what the starting time is. The shift code itself is automatically entered by the coder into the Shift Code field as used in the Time field properties in CLARiSOFT.
Start Of Day	The roll over of date fields can be offset using the Start of Day parameter. In this way the coders date can be enabled such that it will happen at 03:00 when the new shift starts rather than at 00:00.
TransmittedField - CharacterSet	Various character sets can be used although the most common would be ASCII.
ParseEscapeSequences	This feature allows for control characters to be imbedded into the body of the text messages. Decimal values of the ASCII characters are used. These are required to be embedded within \ characters. For example the command STX has a decimal value of 2 so within the text field in the job file \0002\ needs to be inserted.
TriggerMode	This determines what triggers the transmission of the data. The options are either the Selection of the Job or Transmitted when the field is printed.
UpdateQueue - MaxQueueLength	This parameter determines the length of the print queue. The queue is used with Line selection Mode as well as with jobs with Allocations that have been sent via Text Communications.
ComPort1 - BaudRate	CLARiTY Configuration Manager uses 115200
FlowControl	CLARiTY Configuration Manager uses None

Table 5-1: CLARiTY Configuration Manager Parameters (Continued)

Parameter	Comment
Usage	CLARiTY Configuration Manager uses CLARiTY. Other uses for the serial ports include, Text Communications, ZPL Emulation or Transmitted Field.
DatabaseLocation	This parameter is normally set to Local meaning the coder's internal memory. However using CLARiNET the database can be Remote accessed via a network.
EnableUserTestPrint	This enables the Test Print button on the Home page.
JobSelectionMode	Using CLARiNET and Remote Database parameter, the job selection can be changed to Tiered mode rather than by Product Code.
TCPIP - BinaryCommsNetworkPort	The value of 3001 should be entered here if TCPIP communications is required for CLARiTY Configuration Manager or Binary Communications. A value of 0 not valid for correct operation.
DefaultGateway	If communications over different connected networks is required, the IP address of the gateway needs to be entered here.
IPAddress	A valid IP address is required.
SubnetMask	A valid Subnet Mask is required.
TextCommunications - NetworkPort	A non-zero value needs to be entered here i.e. 3003. 3002 should not be used as Master/ Slave communications uses this.
ZLPEmulation - NetworkPort	A non-zero value needs to be entered here i.e. 3004.
TextCommsParameterFile	This is the communications file character set.
UserInterfaces - CLARiTY - Language	This parameter displays the set language of the CLARiTY system.
Passwords - EnablePasswords	This enables the use of password protection for access to the various set up and diagnostics screens accessible using the CLARiTY touch screen.
Level 1 - Mask	Tick the boxes to password protect the areas that require limited access.
Name	This is the name of the level of protection.
Password	The password. This has no effect on CLARiTY Configuration Manager.

Table 5-1: CLARiTY Configuration Manager Parameters (Continued)

Parameter	Comment
PromptonCLARiTY UpdateDetect	With this set to Yes, the system will recognize any CLARiTY update files present on the USB key that are contained in the CLARiTY Update folder.
RecalibrateTouchscreen	This allows the touchscreen to be recalibrated if the setting is too far out for this operation to be chosen from the touch screen.
SetScreenContrastToDefault	Over time the screen contrast can drift. This action resets the default value.
CLARiTY® Config - Archive	This is the name of the last archive taken from this coder.
LastUpdated	This is the time and date of the last archive taken from this coder.

Table 5-1: CLARiTY Configuration Manager Parameters (Continued)

How to Select the Correct Printing Mode

The printer can be setup in two printing modes:

- Fixed Speed Mode
- Encoder Mode

Fixed Speed Mode

Fixed Speed mode should only used when the speed of the conveyor is constant and critical information, such as barcodes are not to be printed.

Note: *If Fixed Speed mode is selected and the linear speed of the conveyor should change, the length of the image printed will either increase or reduce accordingly.*

Encoder Mode

Encoder mode is an accurate way of measuring conveyor speed. The encoder monitors speed changes in the conveyor and compensates for these changes during the printing cycle. Therefore, if barcodes are to be printed, encoder mode is essential to ensure the dimensions of the barcode are correct.

The required printing mode can only be selected through CLARiTY Configuration Manager.

Figure 5-38 shows encoder mode selected, with a quadrature encoder.

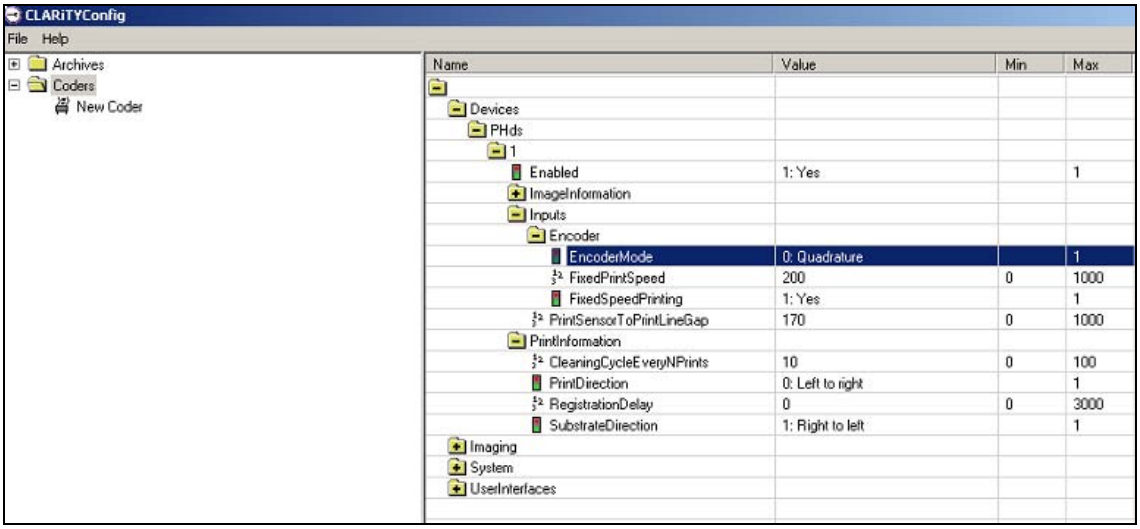

Figure 5-38: Select Encoder Mode

Setting the Speed in Fixed Speed Mode

Do the following tasks to set the speed in Fixed Speed mode:

1. Using a tachometer, a measurement of the conveyor speed in *mm/s* should be taken and the value entered into the *Fixed Speed* parameter setting.
2. Using CLARiTY Configuration Manager select *Fixed Speed Printing* mode, as shown in Figure 5-39.

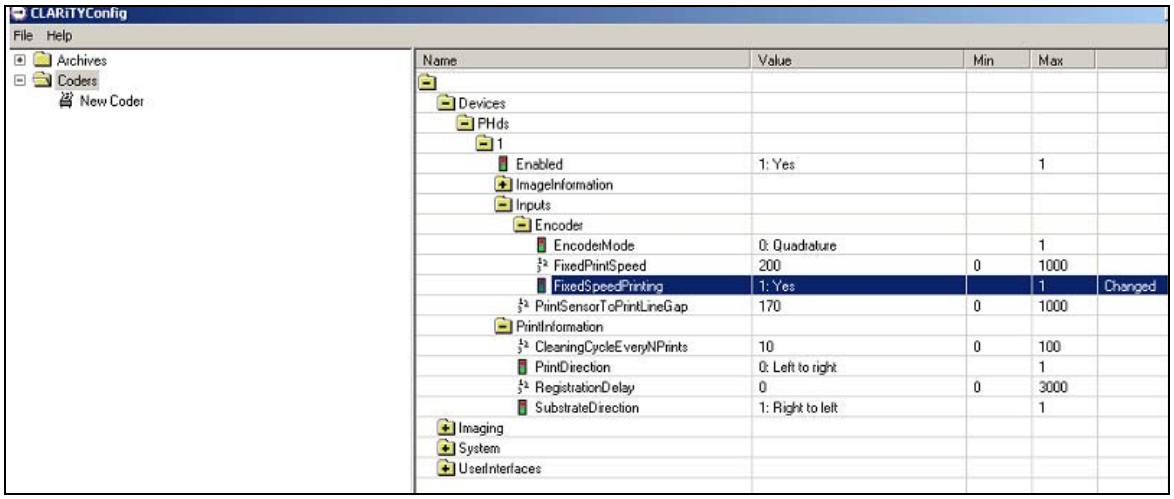

Figure 5-39:

3. On the screen of CLARiTY, navigate to *Tools* > *Set Up* > *Printhead*.

4 Select *Print Speed*, as shown in Figure 5-40.

5 Select *Print Speed* using the + and - icons.

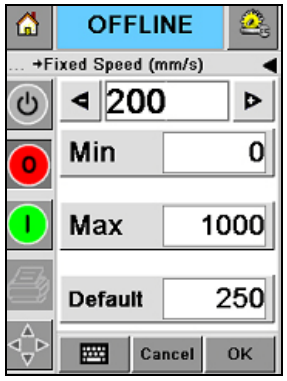

Figure 5-40: Select Fixed Speed

6 Clear the data window and type in a new value using the keypad, as shown in Figure 5-41.

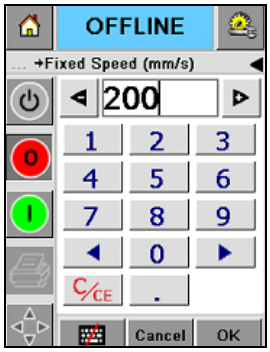

Figure 5-41: Enter Print Speed

7 Choose a setting from the Min, Max or Default values.

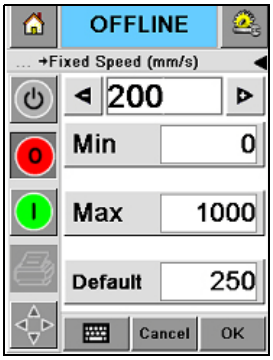

Figure 5-42: Select Max, Min or Default

8 Touch *OK* icon.

9 Touch *Home* icon to return to the Home page.

Setting the Speed in Encoder mode

When encoder mode is selected, the printer will monitor the speed of the conveyor through the encoder. Therefore, no speed parameters need to be entered at CLARiTY.

Do the following tasks to set up Encoder mode:

1. Encoder mode is selected via CLARiTY Configuration Manager, as shown in Figure 5-43.
2. From CLARiTY Configuration Manager, select *Encoder Mode*.
3. Select either a single phase or quadrature encoder.
4. Change the *Fixed Speed Printing* parameter to *No*, save the parameter changes and download to the printer.

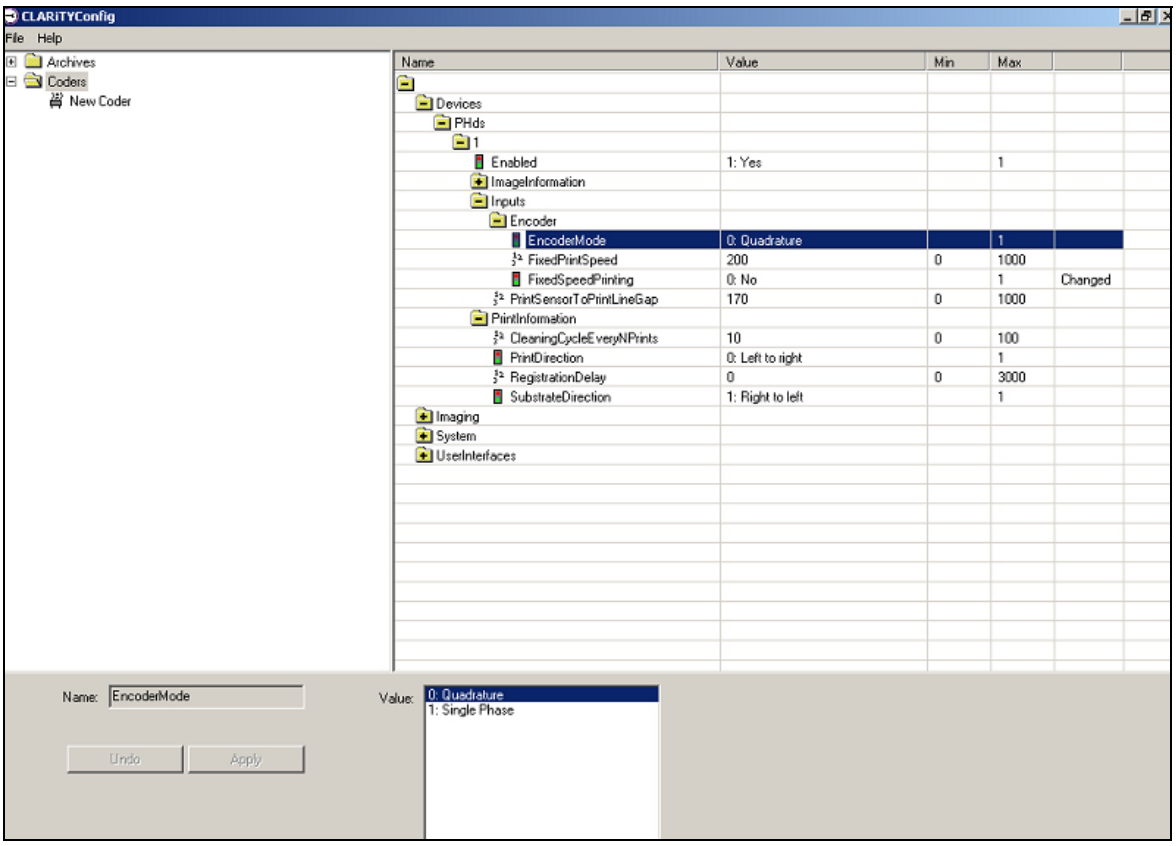

Figure 5-43: Encoder Mode Parameter

How to Set the Correct Print Direction

As standard, the printers are shipped with the print direction set as, Left-to-Right.

If the print direction is incorrect, the setting can be changed in the CLARiTY Configuration Manager or the Coder, as shown in Figure 5-44.

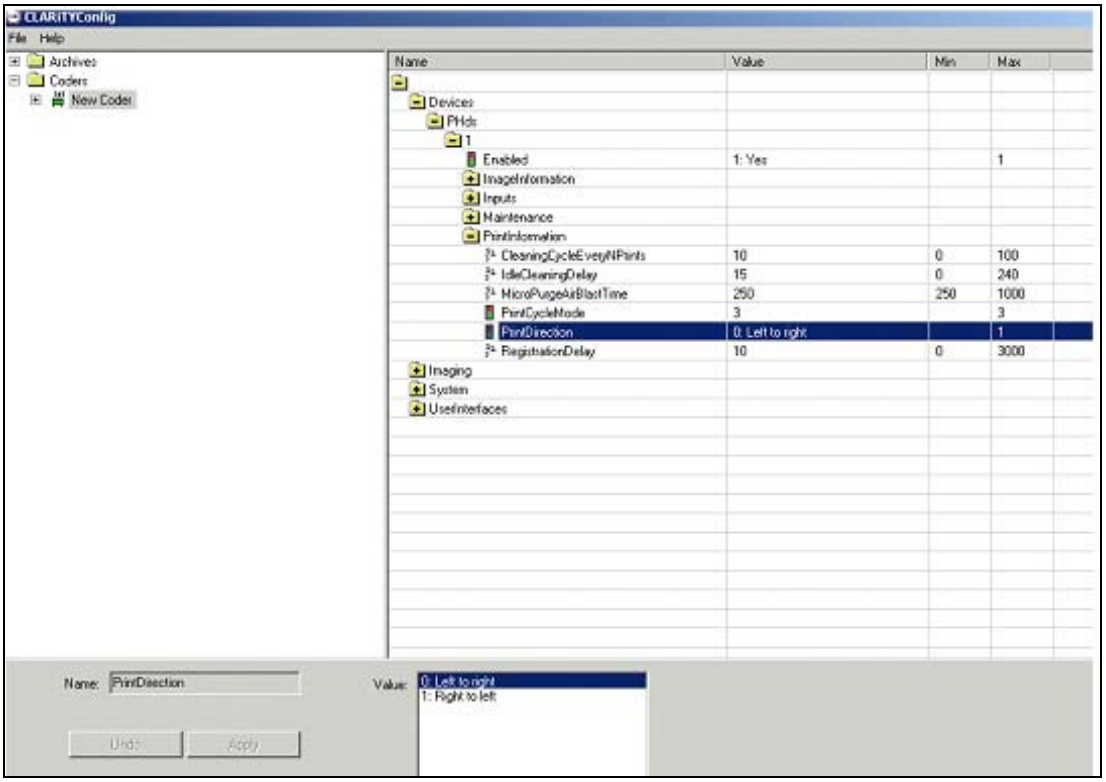

Figure 5-44: Select Printing Speed

How to Enable or Disable the Printhead

Warning

Disabling the printhead will cause the unit not to print.

Do the following tasks to enable or disable the printhead:

1. From the Home page of CLARiTY, navigate to *Tools* > *Setup* > *Printhead*.
2. In the Enabled screen, select whether to enable or disable the printhead and touch *OK*. Figure 5-45, shows the printhead Enabled and Disabled.

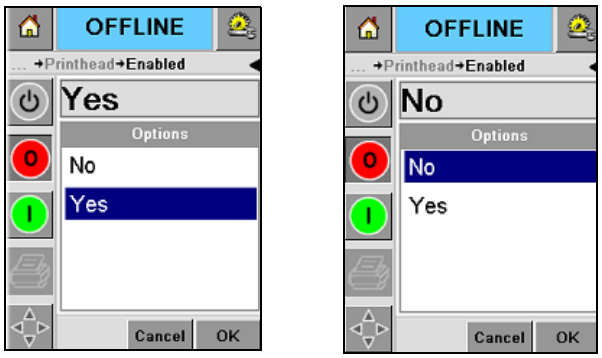

Figure 5-45: Printhead Enabled and Disabled

How to Change the Self Cleaning Frequency of Operation

When used with a remote product sensor, the printer has the ability to self clean the printhead before prints. To maximize filter life, the Videojet is set to clean the printhead for every tenth box.

However, in harsh, dusty environments the self cleaning cycle may be required more frequently in order to keep high print quality.

The printer includes a configurable parameter, Prints per Cleaning Cycle to allow an end user to set the self cleaning cycle in accordance with the factory environment. This can be accessed from the screen of CLARiTY, as shown in Figure 5-46.

As default the value is set at 10.

Do the following tasks to change the parameter in CLARiTY:

1. From the Home page touch *Tools* icon.
2. Navigate through *Setup* > *Printhead* and scroll down to *Prints per Cleaning Cycle*, and enter the new value required.

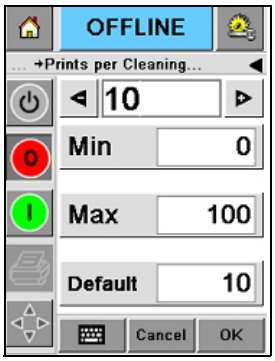

Figure 5-46: Prints Per Cleaning

3 Once the new value has been entered, touch the *OK* button to confirm, followed by the *Home* icon.

Alternatively, this parameter can be changed in CLARiTY Configuration Manager as shown in Figure 5-47.

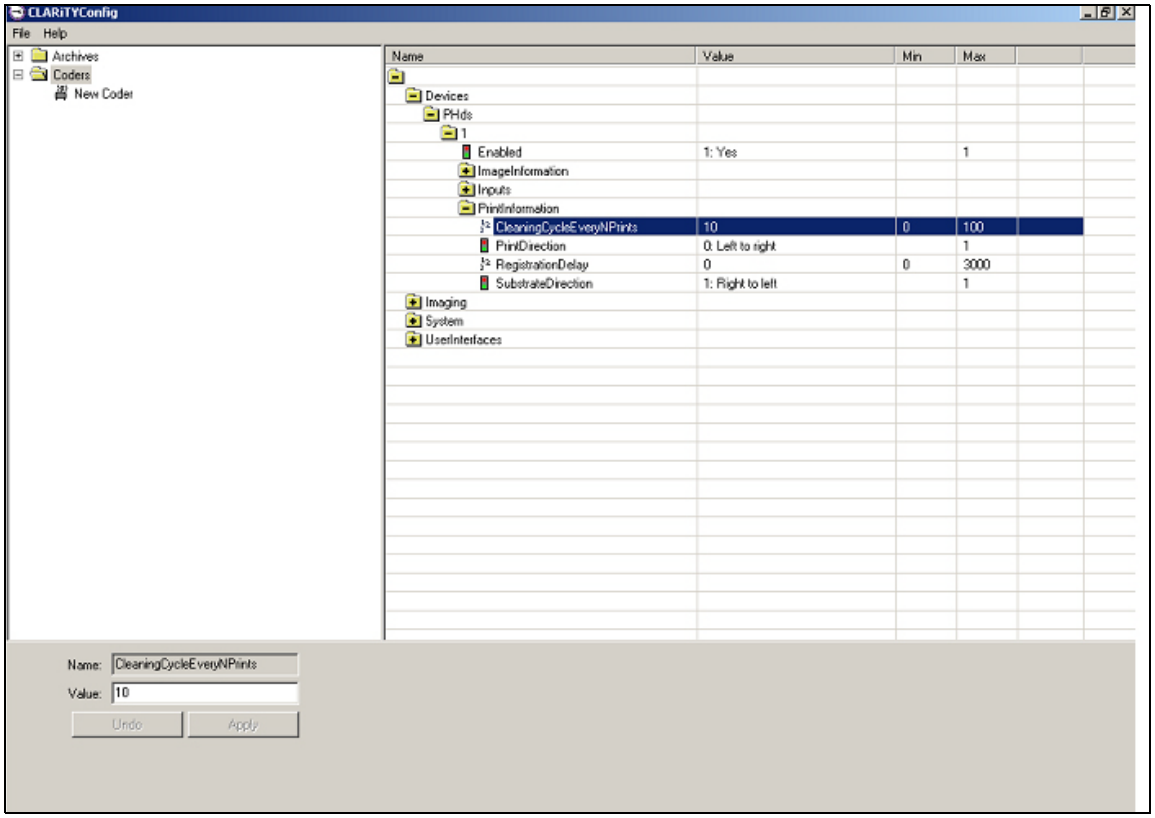

Figure 5-47: Prints Per Cycle

4 Change the *Prints Per Cleaning* parameter to the value required.

5 Save the parameter changes.

6 Download to the printer.

How to Enable the Use Debris Pad

The debris collection pad is a rectangular felt pad placed at bottom of collector cup.

The setting can be changed in the CLARiTY Configuration Manager or the Coder, as shown in Figure 5-48.

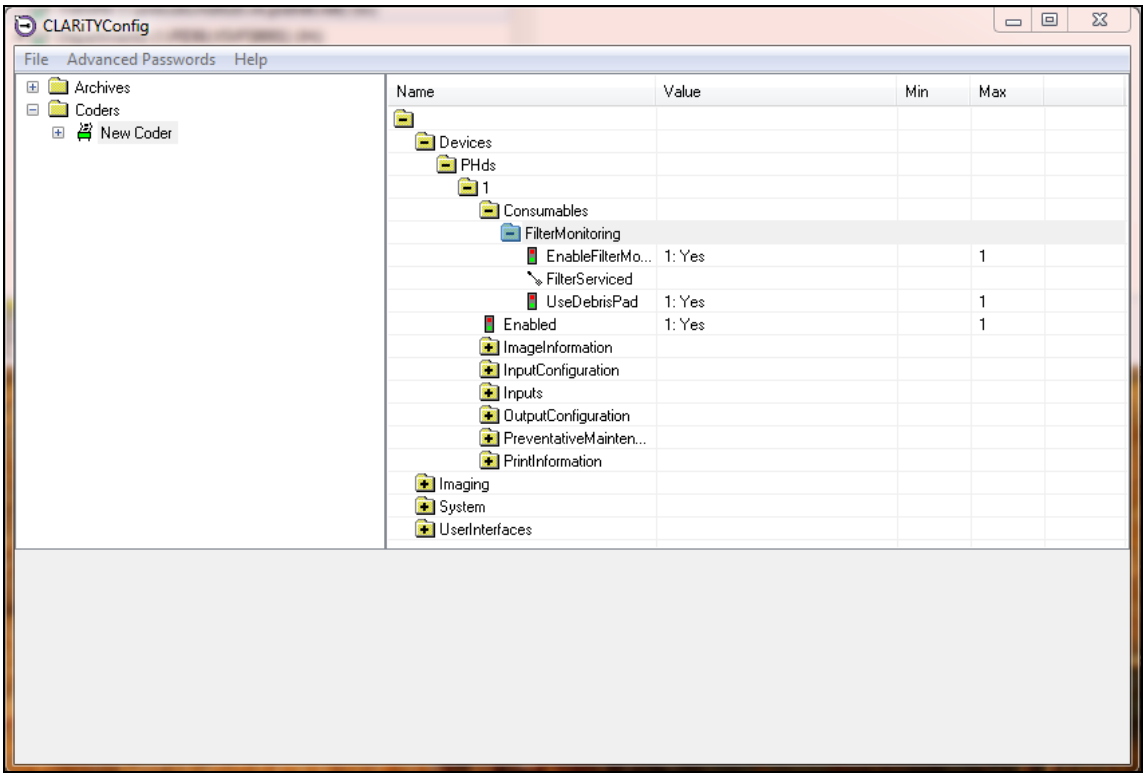

Figure 5-48: Enable Debris Pad

How to Configure Master and Slave Units

To configure Master/Slave mode, CLARiTY Configuration Manager is required.

The printers may be configured using a serial cable or a network connection. However, this procedure assumes that a standard null modem cable is being used.

The following section describes two modes of operation for a Master/Slave group of printers.

- If the group is to be used as a standalone group, Basic Configuration will be sufficient.
- If the group is to be connected to a wider area network, Advanced Configuration will be required.

Note: *If a printer has previously been configured to Advanced Configuration mode, this setting will be saved as the standard default configuration for the printer.*

Basic Configuration

This section describes how to setup the Master and Slave group of printers for Basic Configuration.

Configure the Slave Printers

Establish communications between CLARiTY Configuration Manager to the first Slave printer.

Do the following tasks to configure the Slave printers:

1. Right click on the *New Coder* icon when the icon turns green.

2 Select *Set as Slave*, as shown in drop-down table shown in Figure 5-49.

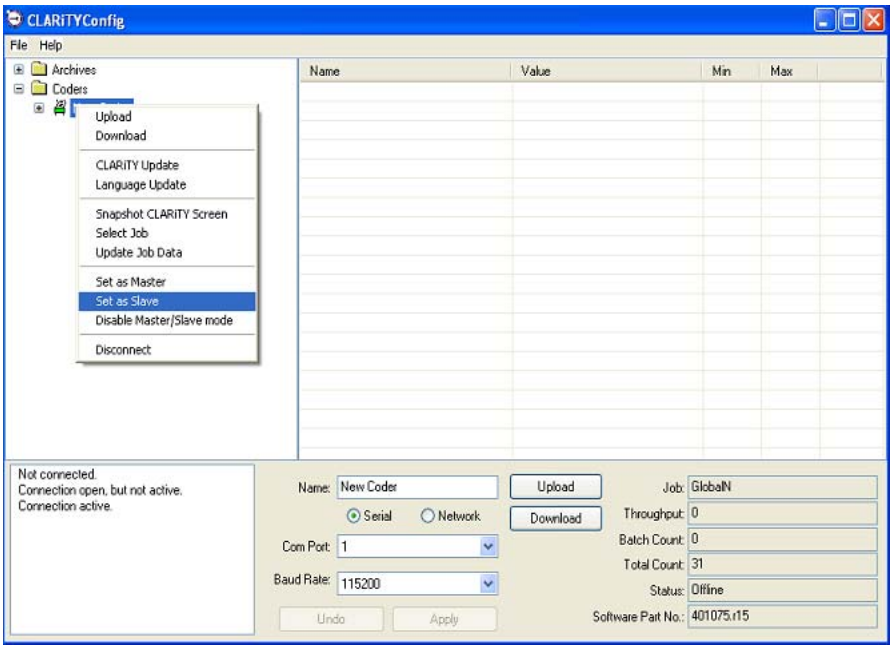

Figure 5-49: Set as Slave Command

The dialog box as shown in Figure 5-50 appears.

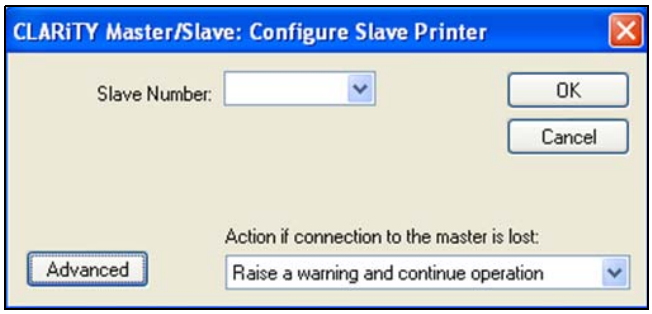

Figure 5-50: CLARiTY Master/Slave dialog box

3 Select the *Slave Number* (One, Two or Three).

***Note**: If less than three Slaves are to be used, they must be numbered consecutively starting with One (e.g. it is not permissible to have two Slave printers numbered One and Three).*

Slave printers connected to the same network require individual Slave numbers.

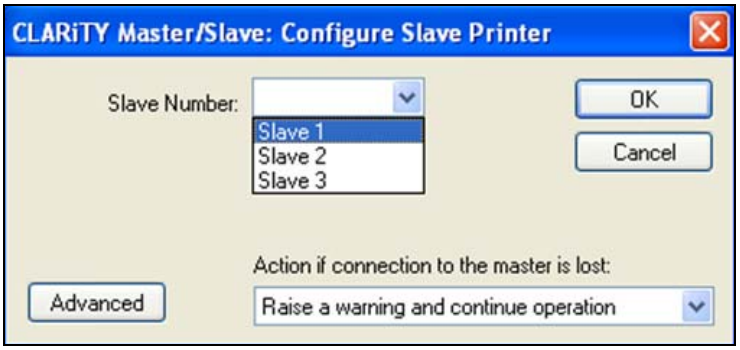

Figure 5-51: Select Slave Number

4 Choose the option to be taken in the event of communication failure between the Master printer and Slave printer.

The three options available are:

- No Action (ignore the condition)
- Raise a Warning message and continue operation
- Raise a Fault message and suspend operation (stop printing)

5 Once the preferred option has been selected for the Slave printer, press the *OK* button to configure this Slave printer.

6 After completing these steps, on a Standard Videojet Printer the *JOB* button on the screen of CLARiTY will be disabled (greyed out) as shown in Figure 5-52 on page 5-41.

7 After a short period of time the Slave printer may raise a Warning or Fault message (depending on the setting you chosen in Action if connection to the Master is lost) to indicate that the Master printer is absent, as shown below in Figure 5-52.

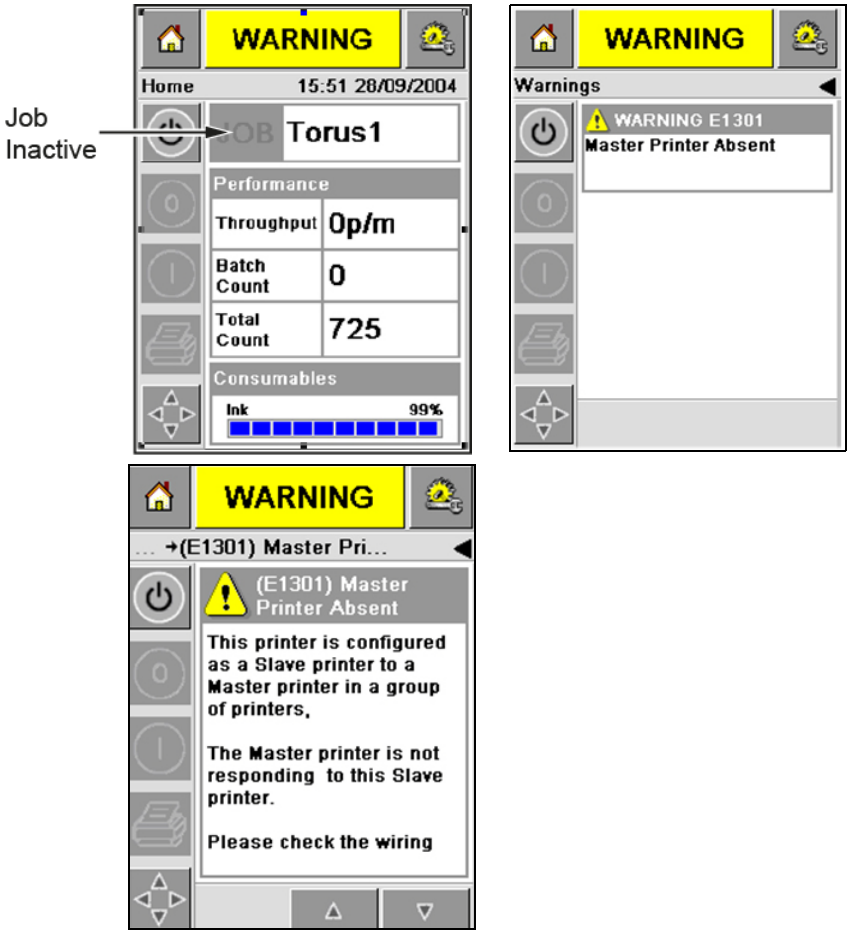

Figure 5-52: Warning Messages - Master Printer not Connected

8 Once the Master has been configured and communications established between printers, the Warning message can be cleared from the Slave printer screen.

9 Repeat steps 1-8 to configure the remaining Slave printers in the group.

Configure the Master Printer

Establish communications between CLARiTY Configuration Manager to the Master printer.

Do the following tasks to configure the Master printer:

1. Right click on the *New Coder* icon when the icon turns 'green'.
2. Select *Set as Master,* as shown in drop down table in Figure 5-53.

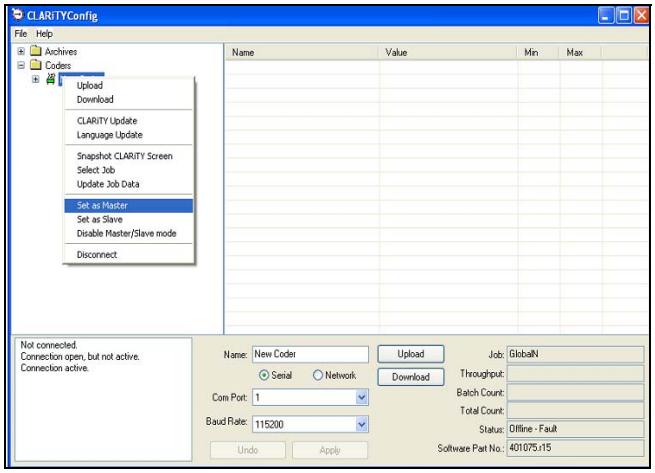

Figure 5-53: Set as Master Command

The following dialog box as shown in Figure 5-54 appears.

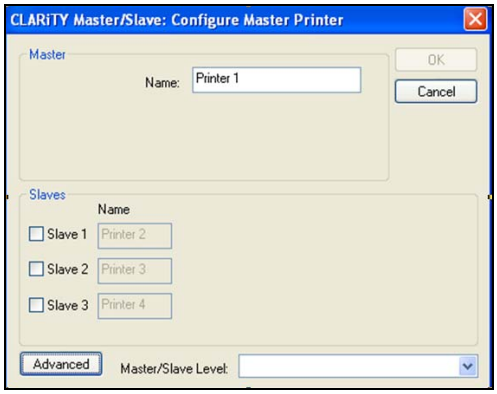

Figure 5-54: Configure Master printer Dialog Box

The *Name* field is simply for the entry of an identifier for the Master and Slave printers.

These names can be viewed on the screen of the Master printer CLARiTY and are useful for identification purposes. Names can be edited from the default values of Printer 1… Printer 4, if required for example: Master…. Slave 1

The check boxes on the left hand side of the dialog box indicate how many Slaves are to be connected.

The dialog box will only allow the selection of consecutively-numbered Slaves starting with Slave 1.

The *Master/Slave level* drop -down box (see Figure 5-54 on page 5-42) is used to select the mode of operation this may be Group Job Select or Group Control.

The section "Using Master/Slave Mode" on page 5-50 contains information about the two Master/Slave levels.

When at least one Slave is enabled and a Master/Slave level has been selected, the *OK* button becomes available.

Press the *OK* button will program the printer with the selected configuration.

Connecting the Printers Together

If the printers are not already connected, they may now be connected together as described under "Physical Installation" on page 4-23.

After a few seconds any Faults and/or Warnings messages on the Master and Slave printers should become clearable. This indicates all connections have been successfully made.

If any Faults/Warnings cannot be cleared, power down and re-power the Slave printer concerned.

If a problem persists, repeat the previous configuration steps to ensure the Master has been configured with the correct number of Slaves and that no Slaves have been issued with the same printer number.

If operating under Group Control mode, any Faults and/or Warnings present on the Slave printers will be reported on the Master printer CLARiTY screen and should be cleared at the Master printer.

Advanced Configuration

- Advanced configuration is designed for situations where the group is to be connected to a wider area TCP/IP network and allows the use of IP addresses instead of simple numbers to identify the printers.
- In order to configure the printers correctly you must obtain one IP address from the IT department for each printer. These must be static IP addresses, not dynamically-assigned addresses. The Subnet Mask used on the network and port number for Master/Slave communications will also be required.
- The default port number is 3002 and in most situations it will not be necessary to change this.
- Only change it if you are instructed to do so by the IT department.
- To avoid confusion, the same port number should be used for all Slave printers.

Configure the Slave Printers

Establish communications between CLARiTY Configuration Manager to the first Slave printer.

Do the following tasks to configure the Slave printers:

1. Right-click on the *New Coder* icon when the icon turns green.
2. Select *Set as Slave*, as shown in drop-down list in Figure 5-55.

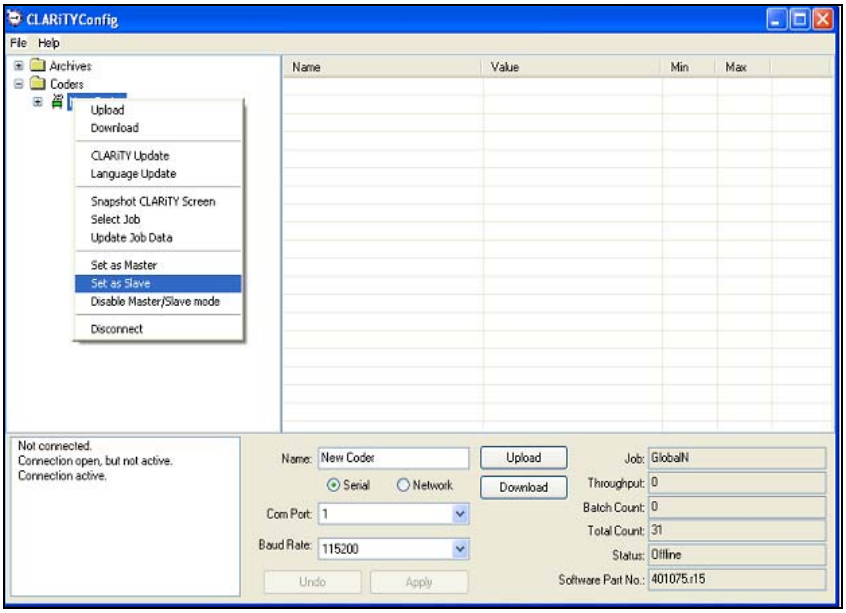

Figure 5-55: Set as Slave Command

3 If the printer has not been given an IP address or configured in the Advanced mode previously, the dialog box shown in Figure 5-56 appears.

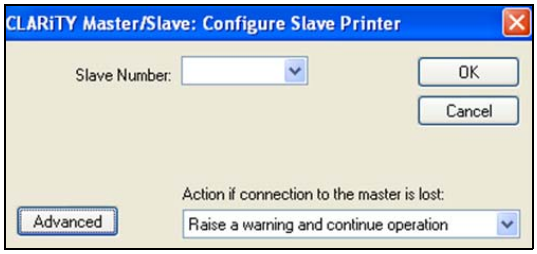

Figure 5-56: Action Selected

4 Click the *Advanced* button to manually set the IP address. Refer to Figure 5-57 on page 5-45.

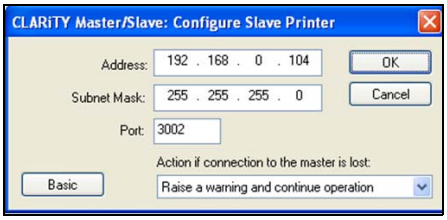

Figure 5-57: Address, Subnet Mask and Port Selected

5 If you click the *Basic* button, the printer will return to the *Basic Configuration*. The IP address of the Slave printers, the Subnet Mask, and the Port number will be entered automatically. Refer to Figure 5-57.

6 Select the option from the *Action if connection to the Master is lost* drop-down list.

The three options are:

- No Action (ignore the condition)
- Raise a warning message and continue operation
- Raise a fault message and suspend operation (stop printing)

7 Click *OK* to save the parameters within the printer.

8 After completing these steps, the *JOB* icon on the screen of CLARiTY will be disabled.

After a short period of time, the Slave printer may display a warning or fault message (depending on the setting you have selected for *Action if connection to the Master is lost*) to indicate that the Master printer is absent (see in Figure 5-58).

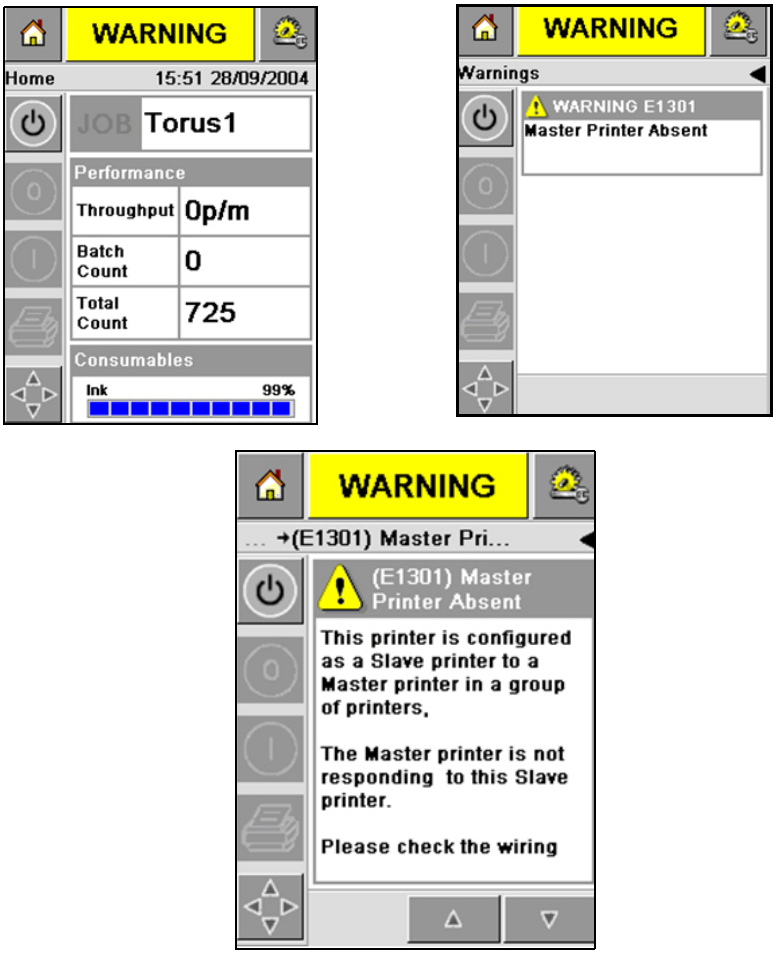

Figure 5-58: Master Printer Absent - Warnings

9 Once the Master has been configured and communication is established between printers, the Warning message can be cleared from the Slave printer screen.

10 Repeat steps 1-9 to configure the remaining Slave printers in the group.

Configure the Master Printer

Do the following tasks to configure the Master printer:

1. Establish communication between the CLARiTY Configuration Manager and the Master printer.
2. Right-click on the *New Coder* icon when the icon turns green.
3. Select *Set as Master*, as shown in the drop-down list in Figure 5-59.

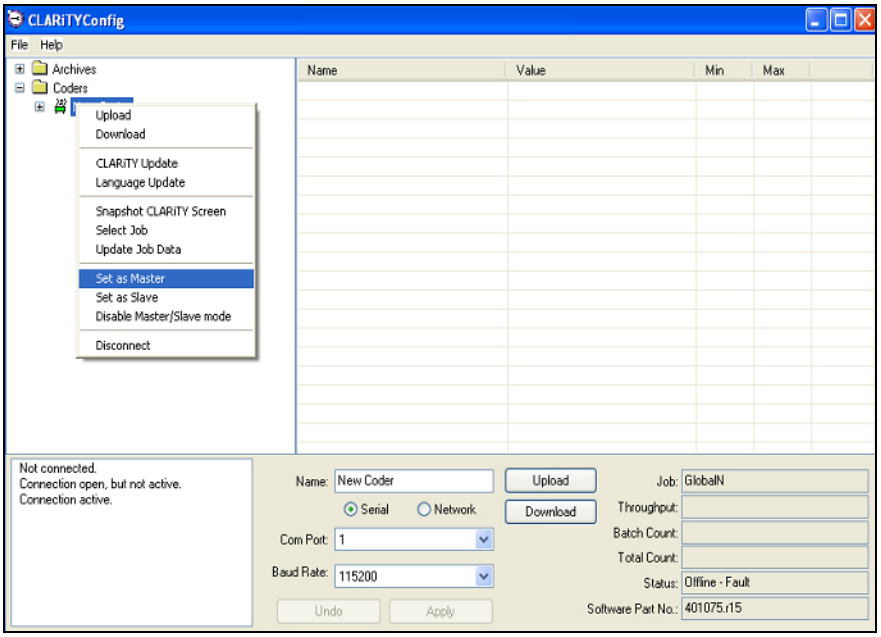

Figure 5-59: Select Set as Master

4. The Configure Master printer dialog box appears (see Figure 5-60).

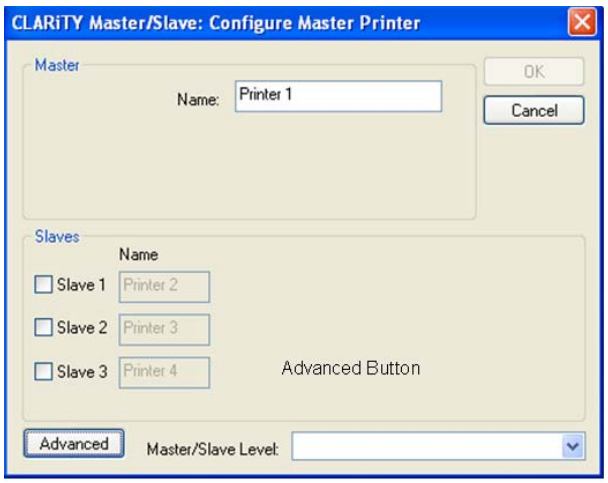

Figure 5-60: Configure Master Printer Dialog Box

5 Click the *Advanced* button, to change to Advanced Configuration.

If the Slave has previously been given an IP address or has been configured in the Advanced mode, the dialog box shown in Figure 5-61 appears.

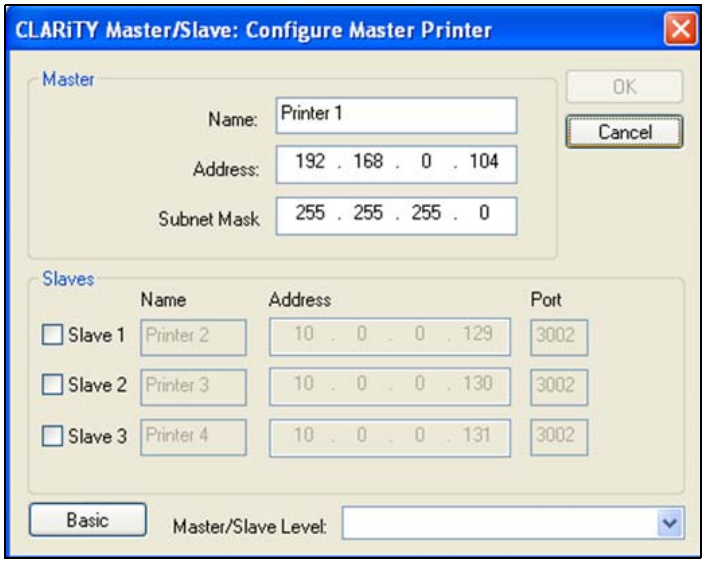

Figure 5-61: Advance Configuration

6 The *Basic* button can be used to return to the Basic configuration mode. The printer, in this mode, sets the IP address of the Master/Slave clusters automatically.

7 To enter values in the *Name* field, *Slave* check boxes and Master/Slave Level box refer to "Configure the Master Printer" on page 5-42.

8 In the Advanced Configuration mode, you must manually enter the IP address and the Subnet Mask Number of the Master printer and the IP addresses and port number of the Slave printers.

***Note**: The check boxes on the left-hand side of the dialog box indicate how many Slaves are to be connected. As stated previously, the dialog box will only allow the selection of consecutively-numbered Slaves starting with Slave 1.*

9 The Master/Slave level drop-down box is used to select the Master/Slave mode which may be Group Job Select or Group Control.

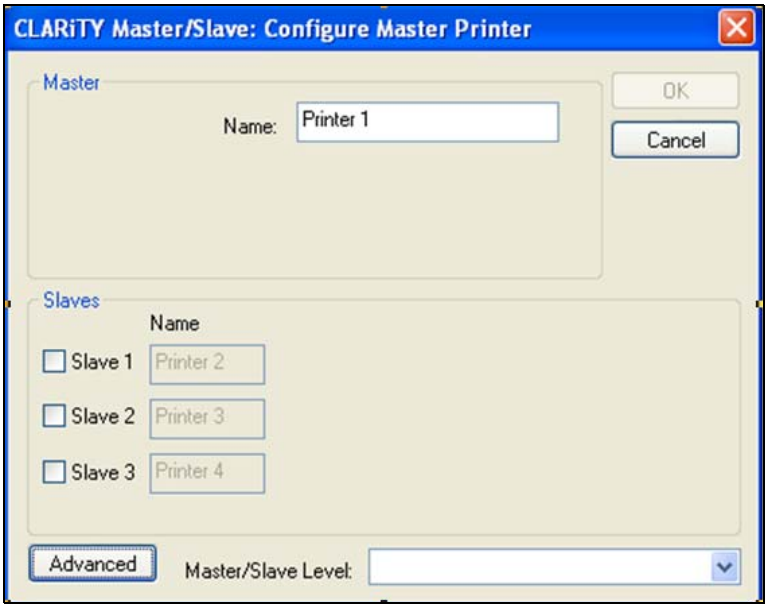

Figure 5-62: Master/Slave Mode

The *OK* button is enabled when at least one Slave is enabled and a Master/Slave level has been selected.

10 Click *OK* to program the printer with the selected configuration.

Connecting the Printers Together

The printers may be connected together as described in the"Physical Installation" on page 4-23.

1 After a few seconds any Faults and/or Warnings present on the Master and Slave printers should become clearable. This indicates all connections have been successfully made.

2 If any Faults/Warnings can not be cleared, place the printer in *Shutdown Mode*, then turn off and turn on the Slave printer concerned.

3 If the problem persists, repeat the configuration steps to ensure that the Master and Slaves printers have been configured with the correct IP addresses, subnet masks and port numbers.

4 If operating under Group Control mode, the Faults/Warnings present on the Slave printers will be reported on CLARiTY of the Master printer and can be cleared at this printer.

Using Master/Slave Mode

Group Job Select Mode

The primary function of this mode is to ensure that all printers in the group are printing the same (image) job.

Job selection is from the Master printer only and will automatically send the job data to the Slave printers connected.

The Master Printer

In *Group Job Selec*t mode, the CLARiTY operator interface will act differently to that of a standalone printer.

If a Slave printer enters a fault state, the error will be reported on the Master printers CLARiTY, as shown in Figure 5-63.

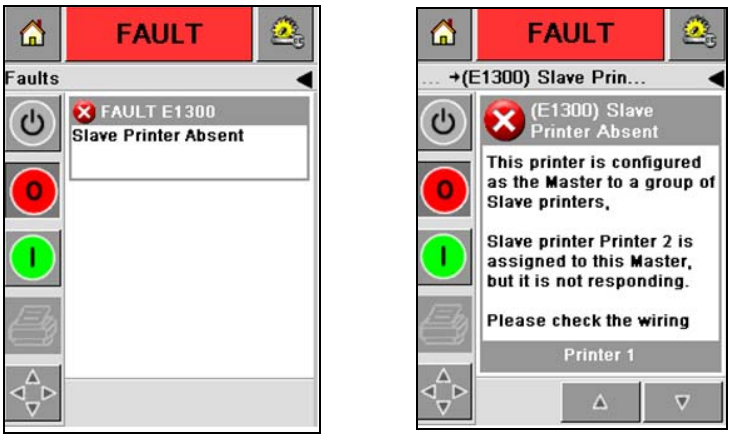

Figure 5-63: Master/Slave Connection - Fault Message

The fault can be cleared, when the communications are re-established or when the Slave printer is unassigned.

By navigating to the Printhead option via *Tools* > *Setup* > *Printhead*, or via the Diagnostics screen, *Tools* > *Diagnostics* > *Printhead*, the Operator is presented with a list of printers connected to the Master, as shown in Figure 5-64 on page 5-51.

Note: *The Master printer will always be presented first followed by the Slaves.*

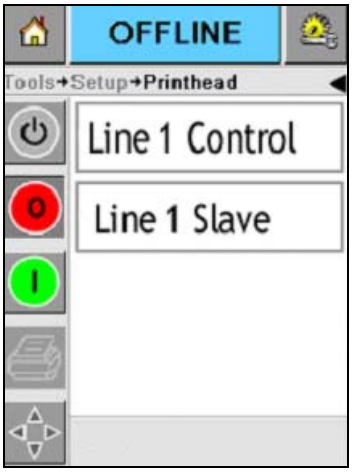

Figure 5-64: List of Printers - Connected

Note: *If the Master and Slave printers have been given a Name, as described in Configure the Master Printer, CLARiTY will reflect these changes as can be seen in Figure 5-64.*

The Slave Printers

In Group Job Select mode only the *JOB* button on the home page of CLARiTY is disabled, as job selection can only be initiated from the Master printer, as shown in Figure 5-65.

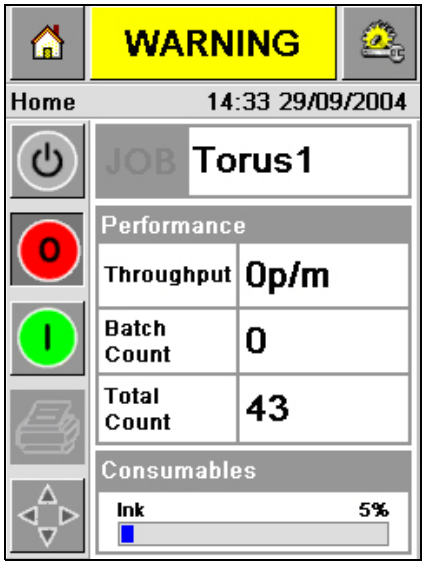

Figure 5-65: Group Job Select Mode

Note: *Standard printers in Slave mode and Slave printers (No CLARiTY LCD) will accept communications from CLARiTY Configuration Manager and other software packages, for example CLARiSOFT.*

Assigned Printer Parameter

The *Assigned Printer* parameter can be viewed by navigating to *Tools* > *Diagnostics* > *Printhead* and selecting the printer required.

This parameter will allow the chosen printer to be disabled (unassigned) via the software, as shown in Figure 5-66.

Setting the value to *No* on the chosen printer will allow a *Slave Absent* fault to be cleared at the Master CLARiTY, so the Master and other Slave printers can continue operation.

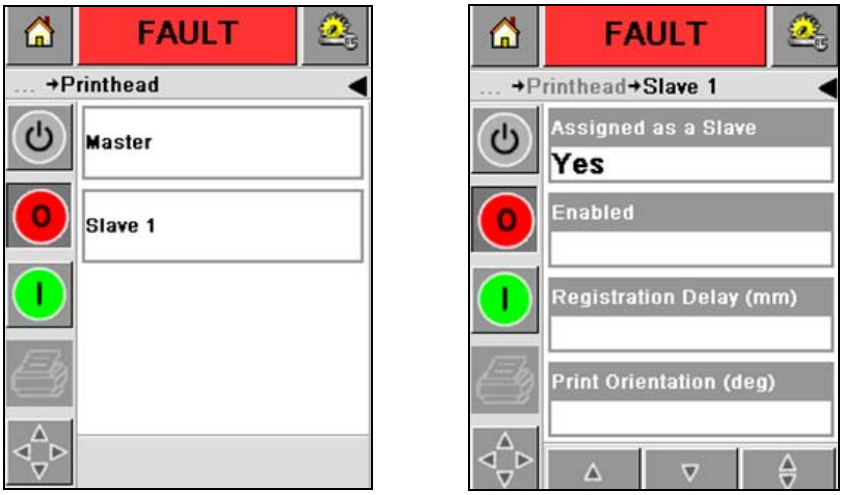

Figure 5-66: Assigned Printer Parameters

When a Slave printer is unassigned, the Master cannot send commands to the Slave printer and will ignore any information sent from the Slave printer.

Un-assigning a Slave printer is a useful feature if a printer is removed for maintenance and the rest of the group needs to continue operation.

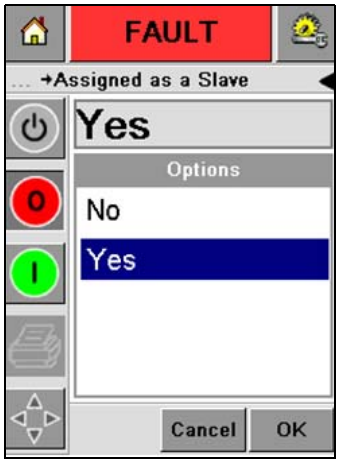

Figure 5-67: Slave Absent Fault

If a printer is to be permanently removed, reconfigure all printer numbers affected as described in the configuration of Master/Slave printers.

Group Control Mode

Group Control mode allows Slave printers to be controlled from the Master printers CLARiTY interface.

In addition to the parameters available in Group Job Select mode, additional *Setup and Diagnostics* screens are available for setup and diagnostics information.

The Master Printer

In Group Control mode, the CLARiTY Operator interface will act differently to that of a standalone printer.

Using only the screen of the Master printer it is possible to view Diagnostic and edit Set Up information on the Master and any chosen Slave printer, as shown in the example below.

By navigating to:

Tools > *Diagnostics* > *Printhead* > *Slave 1* > Inputs, there will be a short delay whilst the Master printer retrieves the parameters from the *Slave 1* printer. These parameters will then be displayed on the CLARiTY screen of the Master, as shown in Figure 5-68.

If *Set Up* information is selected, any parameters edited would be saved by the selected Slave printer.

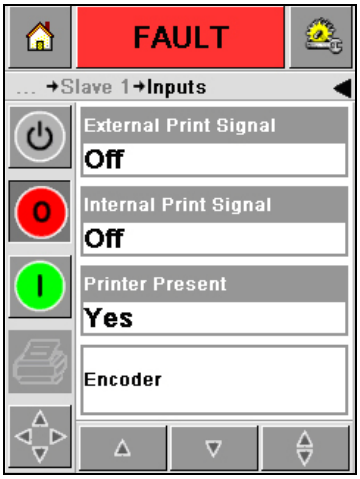

Figure 5-68: Group Select Mode

If a Slave printer raises a *Fault or Warning*, the message will be displayed on the Master printer CLARiTY, as shown in Figure 5-69.

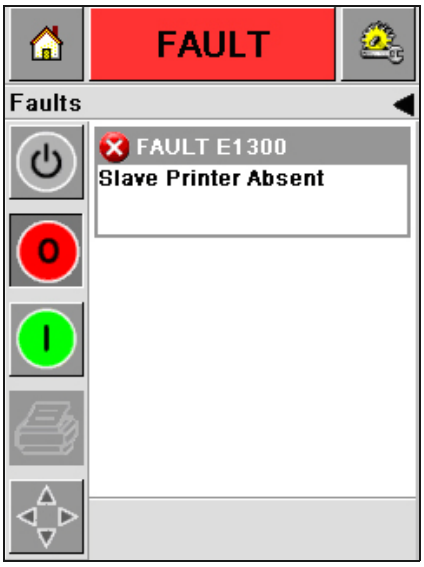

Figure 5-69: Slave Printer Fault

In addition, the Fault will also be displayed on the Slave CLARiTY if it is a standard Videojet 2300 printer.

When interrogating the error screen on the Master CLARiTY, the name of the Slave printer raising the error will be displayed, for example Slave 1.

Error messages may be cleared in the normal way or, if desired, the printer may be unassigned to ignore the error (Refer to "Disabling Master/Slave Mode" on page 5-56 for information on unassigning Slave printers).

In addition, the Master printers *Home* screen now contains the standard *Consumables* bar, as shown in Figure 5-70.

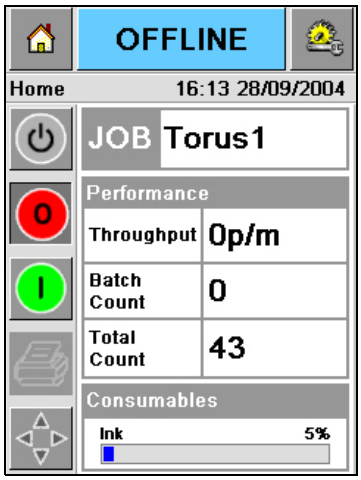

Figure 5-70: Consumables Bar

The *Consumables* bar will indicate the lowest ink level of all the grouped printers, for example the level shown may be relevant for Slave 1 as opposed to the Master unit.

Pressing *Consumables* bar a second time will display the consumables level across all printers, as shown in Figure 5-71.

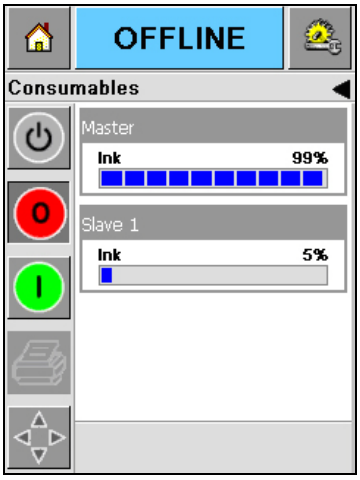

Figure 5-71: Consumables Level

Pressing an individual printer consumable bar will go directly to the details for that printer.

The *Performance* panel will display *Batch Count* values for the group. *Total Counts* for individual printers can also be viewed, as shown in Figure 5-72.

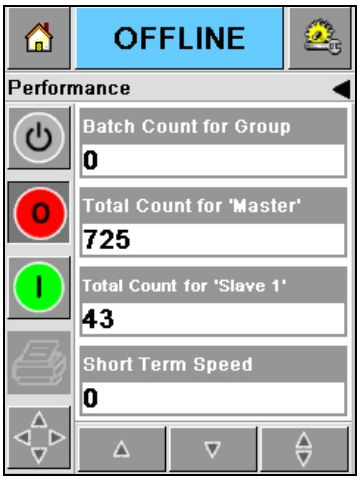

Figure 5-72: Performance Panel

The Slave Printers

Slave printers in *Group Control* mode will typically be 2300 series Slave printers (no CLARiTY Operator Interface) and therefore will have no direct interaction with the user.

However, if a standard 2300 series printer is used as a Slave in *Group Control* mode, the *JOB*, *Online/Offline*, *Print Position* and *Shutdown* buttons are disabled, as shown in Figure 5-73.

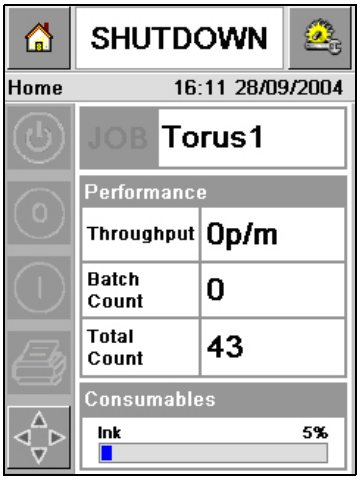

Figure 5-73: Standard Printer as Slave

Job selection and Online/Offline changes may only be initiated at the Master printer.

Standard printers in Slave mode will accept communications from CLARiTY Configuration Manager and other packages, e.g. CLARiSOFT, all other operations will be initiated from the Master printer.

Slave printers (no CLARiTY) will accept communications from

CLARiTY Configuration Manager and other packages, e.g. CLARiSOFT.

Disabling Master/Slave Mode

If a Slave printer is to be temporarily removed from a Master/Slave group, the printer can be unassigned from the Master. This is described in the section Using Master/Slave mode (refer to“Using Master/Slave Mode” on page 5-50 “).

If a printer is to be permanently removed from a Master/Slave group, the following instructions should be observed:

Disabling a Slave Printer

Establish communications between CLARiTY Configuration Manager to the *Slave* printer.

To disable a Slave printer do the following tasks:

1. Right click on the *New Coder* icon when the icon turns green.
2. Select *Disable Master/Slave mode*, as shown in the drop down table shown in Figure 5-74.

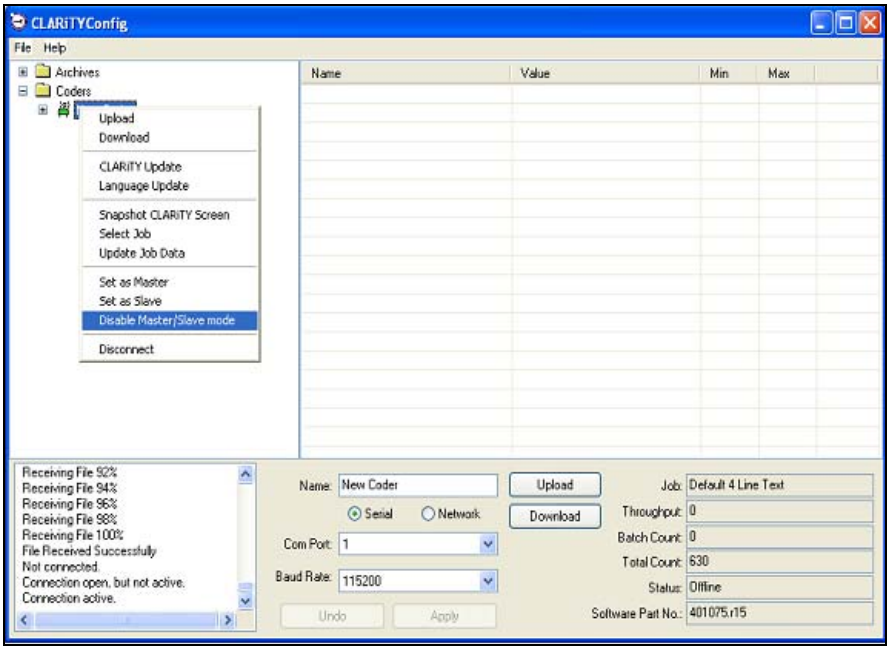

Figure 5-74: Disable Master/Slave Mode

3. You will be asked for confirmation.
4. Click *Yes* and the Slave printer will be deleted from the Master/Slave group and begin to function as a standalone printer.
5. If the Slave printers are Standard printers, the *JOB* button will be enabled.

Note: *The Slaves Job database will be empty or contain only the last Job selected.*

The Master/Slave group database is held by the Master printer. Therefore, if a printer is disabled from the Master/Slave network and becomes a stand alone unit, any additional Jobs required will need to be downloaded to the relevant printer from CLARiSOFT.

Note: *If you are intending to replace the Slave, it is advisable to configure the new Slave printer, before disabling the currently activated Slave.*

If using basic configuration, ensure the old Slave has been disconnected from the network and configure the new Slave with the previous Slave network number.

If using advanced configuration you will need to configure the new Slave with a fresh IP address and configure the Master to communicate with this new address.

If the Slave is not being replaced, configure the Master to only connect to the remaining Slaves.

Disabling the Master Printer

Connect CLARiTY Configuration Manager to the Master printer and select 'Disable Master/Slave mode' as described previously.

You must now either:

- Replace the Master printer with a new printer containing identical configuration parameters and ensure the old Master printer has been removed from the network.
- If using advanced configuration, replace the Master printer with a new printer containing identical configuration parameters, but with a new IP address.
- Disable Master/Slave mode for one Slave printer, then configure it to be the new Master and connect the remaining Slaves.
- Disable Master/Slave mode for all Slaves and use as standalone printers only.

CLARiTY Operator Interface

6

This chapter contains the following topics:

- Home Page of CLARiTY
- Screen Description
- Data Entry Pad

Introduction

The CLARiTY operator interface is a touch screen system. The interface operates like web pages of any internet browser. The icons in the interface help the operator to navigate through the interface easily.

Normally most areas of the interface are active. The operator can touch the active areas to select the required feature. The interface also contains the icons that are like buttons on the normal control panel (for example,).

Home Page of CLARiTY

The Home page of the CLARiTY is shown in Figure 6-1.

Figure 6-1: Home Page of CLARiTY

Screen Description

Icons

The screen has shortcut icons that help you navigate to the key pages of the interface. You can reach any key page from the current page with these icons (see Figure 6-2 on page 6-3 and Table 6-1 on page 6-3).

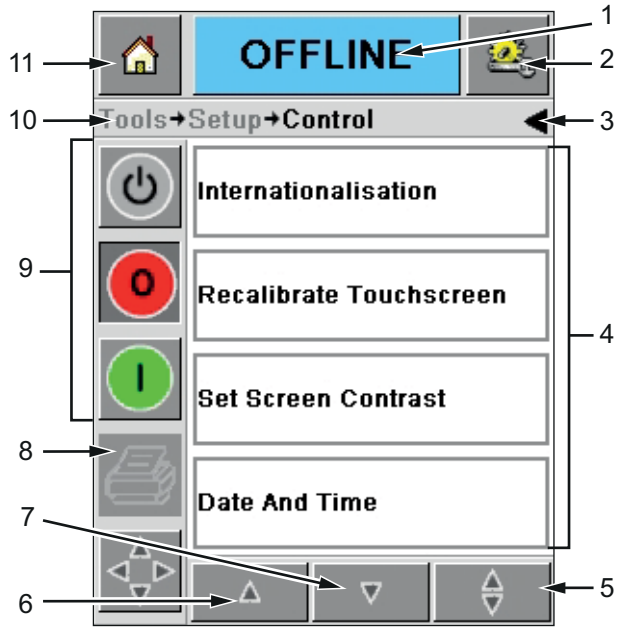

1. Status Window
2. Tools Icon
3. Back Icon
4. Job Page
5. Scroll Bar
6. Up Icon
7. Down Icon
8. Print Icon
9. Control Icons
10. Navigation Bar
11. Home Icon

Figure 6-2: Shortcut Icons

UI Element	Description
Status Window	Takes you to the Fault and Warning pages.
Tools Icon	Takes you to the Setup and Diagnostics Tools page.
Job Page	Use to load the next image (job) for printing and to enter any variable data.
Scroll Bar	Allows you to navigate up and down the page selected.This bar is used to find the job in the Videojet database.
Control Icons	Refer to “Control Icons” on page 6-4.
Navigation Bar	Indicates the location of your current screen in the menu tree. The current screen allows you to do the following tasks: • Touch the Back icon to return one level up. • Touch any level displayed on the Navigation Bar to take you to that level.
Home Icon	Takes you to the Home page.

Table 6-1: UI Elements

Control Icons

You can use the control icons to get control on the printer immediately (refer to Figure 6-3).

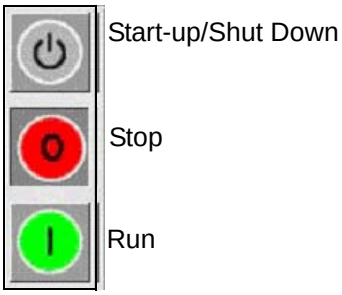

Figure 6-3: Control Frame Icons

Active Areas

The *Production Performance* and *Consumables* areas in Figure 6-4 take you to the pages that have more information and statistics.

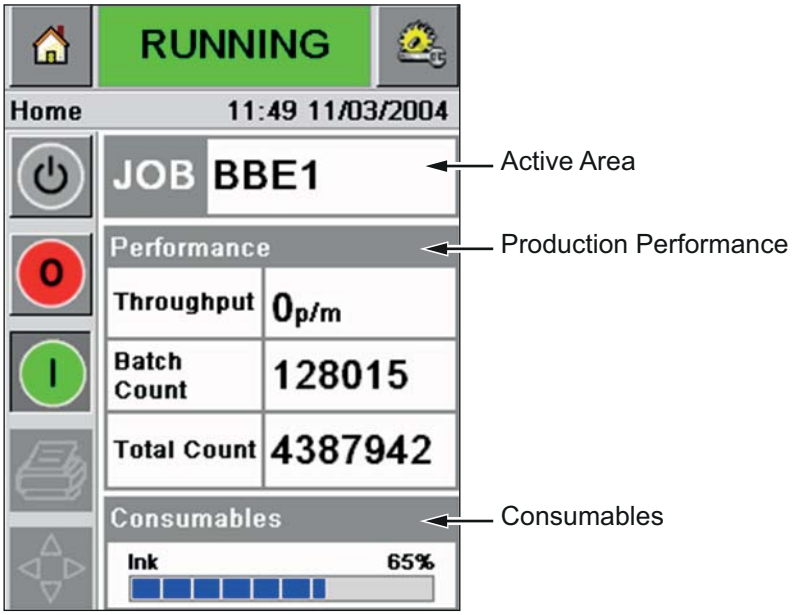

Figure 6-4: Performance and Consumables Status

Data Entry Pad

An alphanumeric, mobile phone style data entry pad is provided to the operator to enter the data in the CLARiTY interface.

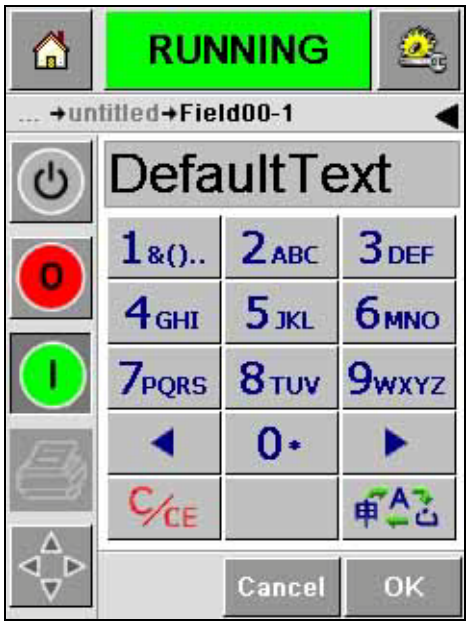

Figure 6-5: Data Entry Pad

The different keys in the data entry pad are shown in Table 6-2.

Key	Characters (in turn)
1&()..	1.,?/:!-&;+#()'"_@$¢£€¥%<>¿¡§=¤
2ABC	ABC2abcÄÀÁÂÃÅÆÇäàáâãåæç¢
3DEF	DEF3defÈÉËÊèéëê€
4GHI	GHI4ghiÎÌÍîìí
5JKL	JKL5jkl£

Table 6-2: Data Entry Pad Map - English (Default)

Key	Characters (in turn)
6MNO	MNO6mnoÖÔÒÓØÑöôòóøñ
7PQRS	PQRS7pqrs$ß\
8TUV	TUV8tuvÜÙÛÚüùûú
9WXYZ	WXYZ9wxyz
◄	Cursor left
0 *	0*
►	Cursor right
C/CE	Backspace/Clear
	Space

Table 6-2: Data Entry Pad Map - English (Default) (Continued)

Maintenance

7

This chapter provides you describes:

- Routine Maintenance
- Service Maintenance
- Preparation of the Printer for Shipping

Introduction

The 2300 series printers are high resolution printers with an autopurge feature. Due to this feature, the purging maintenance effort which is required to maintain the print quality can be reduced.

The autopurge feature of 2300 series printers can flush the printhead nozzles at production line speeds, before every print. This feature ensures the sustenance of good print quality across prints. It prevents:

- Operator intervention
- Production line/printing interruption
- Ink wastage

This feature helps the printers to sustain good print quality across prints.

The minimum maintenance that is required for the ink reclaim portion of the printer is described in the following sections.

Routine Maintenance

Routine Cleaning

Routine cleaning requires preventative maintenance checks and services. Refer to Table 7-1 for a maintenance schedule. A cleaning kit must be used while cleaning.

Maintenance Schedule

Period	Maintenance Activity
Daily	Clean the ink collector cup if debris collection pad is not fitted
	Clean drain channel
	Clean ink build up from the front of the printhead
Monthly	Flush reclaim tubing and collector cup if debris collection pad is not fitted
	Replace the debris collection pad **Note:** The recommended replacement interval for pad is every month or as prompted by the user interface.
Six Months	Replace the ink reclaim filter
	Replace the reservoir air filter
	Replace the air regulator filters
	Note: The recommended replacement interval for all filters is every six months or as required by the application.
	Replace the vent caps

Table 7-1: Maintenance Schedule

Note: *Maintenance schedule can be set through CLARiTY configuration manager. Once enabled, the manager will prompt the user through warnings when the maintenance activity is required.*

Note: *For information on daily maintenance, refer to Operator Manual.*

Note: *For information on removal and replacement of ink reclaim filter, reservoir air filter, air regulator filter and vent cap, refer "Replacement Procedure" on page 7-3.*

Scheduled Maintenance

Replacement Procedure

Ink Reclaim Filter

Do the following tasks to replace the ink reclaim filter:

1 Disconnect the top and bottom fitting of the filter from the pipe.

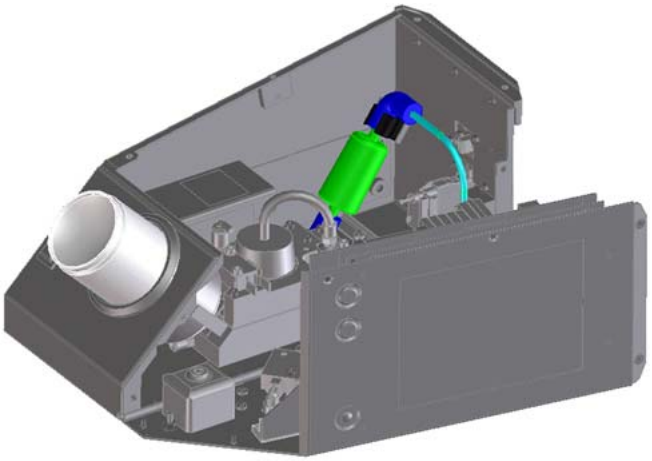

Figure 7-1: Ink Reclaim Filter

2 Remove and discard the old filter along with the fittings.

3 Connect the new filter along with the fittings to the pipe correctly.

Note: *Make sure that the orientation of the filter is correct.*

Vent Cap

Do the following tasks to replace the vent cap:

1. Unclip the vent cap from its retainers on top of the ink reservoir.
2. Remove the knurled flange nut at the end of the polyurethane pipe from the stainless steel fitting.
3. Remove and discard the old vent cap.
4. Place the new vent cap on the polyurethane pipe and hand tighten the knurled flange nut to the stainless steel fitting.

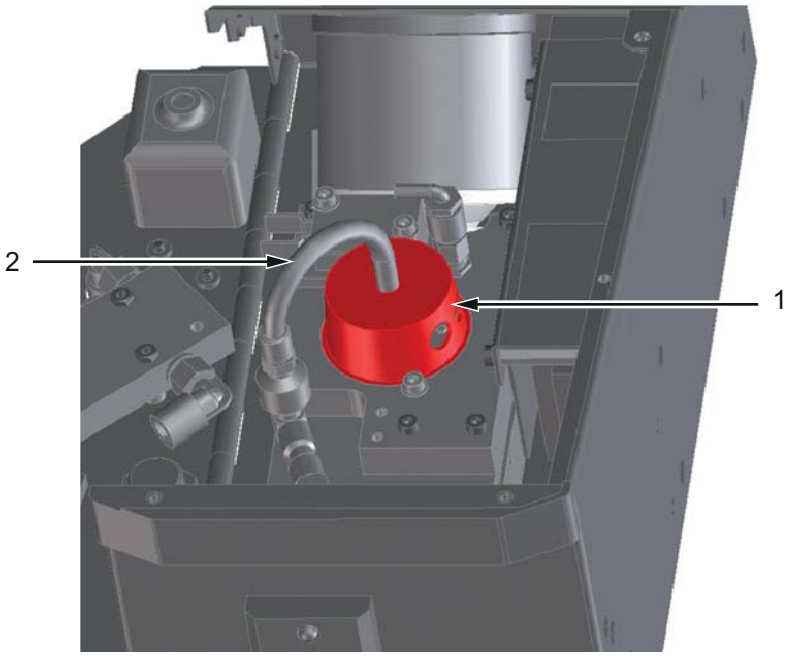

1. Vent Cap
2. Polyurethane Pipe

Figure 7-2: Vent Cap

5. Refit the vent cap under the two retainers on ink reservoir.

   Note: *Make sure that the vent hole on the stainless steel fitting is in line with material lining of vent cap. The material lining is present to capture ink mist vented from the reservoir spreading into the body of the printer.*

Reservoir Air Filter

Do the following tasks to replace the reservoir air filter:

1. Loosen the knurled nuts on the fittings in the filter and disconnect the tubes at either end of the filter.

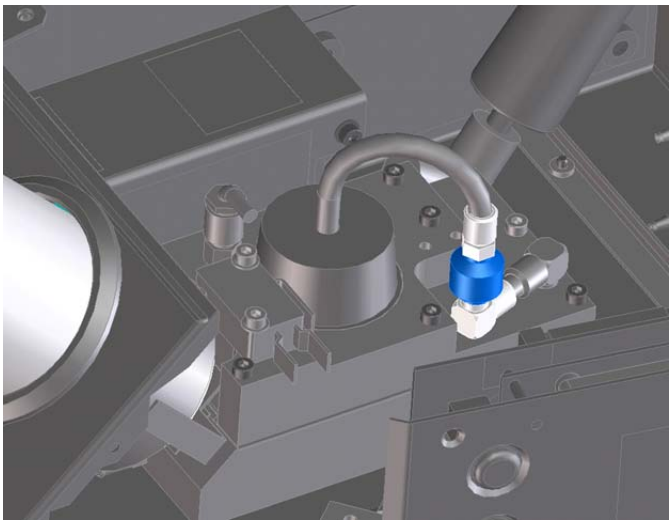

Figure 7-3: Reservoir Air Filter

2. Disconnect and discard the old filter.
3. Connect the new filter, refit the knurled nuts on the fittings in the filter and connect the tubes at either end of the filter.

Air Regulator Filter

Do the following tasks to replace the air regulator filter:

1. Unscrew the bottom of the air regulator filter.

Figure 7-4: Air Regulator Filter

2. Remove and discard the existing filter.
3. Place the new filter and refit the bottom of the air regulator filter.

Shutdown Procedure

Printer Shutdown	Period
Normal	Less than 3 days
Extended	Greater than 3 days and lesser than 2 weeks
Storage	Greater than 2 weeks

Table 7-2: Printer Shutdown Period

Normal Shutdown

Switch off the power. No further action is required for this type of shutdown.

Extended Shutdown

Following guidelines are recommended for extended printer shutdown periods to minimize the risk of clogged orifices and ensure faster startups.

Do the following tasks during extended shutdown of the printer:

1. Switch off the power.
2. Pull the printer back away from the production line to protect the printer from incidental contact.
3. Install a shipping plate to cover the nozzle array. Make sure that the shipping plate is clean and free of debris before it is installed on the printer.

   Note: *Shipping plates are included on every new printer or may be purchased separately if necessary.*

Storage Shutdown

Do the following tasks during storage shutdown of the printer:

1. Drain the printer of ink. Refer to “Draining the Printers” on page 7-9 for the draining instructions.
2. Switch off the power.
3. Install the shipping cap on the top of the monoblock (under the vent cap).
4. Install a shipping plate to cover the nozzle array. Make sure that the shipping plate is clean and free of debris before installing it on the printer.

   Note: *Shipping plates are included on every new printer or may be purchased separately if necessary.*
5. Move the printer to the desired storage location with a temperature range between 50° F - 95° F.
6. Make sure that the printer remains in the upright and level orientation.
7. To re-commission the printer, follow the instructions in the Chapter 4, “Installation” and Chapter 5, “Printer Setup”.

Draining the Printers

In normal operation it is essential to keep a printer in a level orientation, to avoid ink spillage.

In the event the printer must be shipped, relocated off-site, stored for more than two weeks, or disassembled for replacement of an ink path component, it is essential to empty the ink from the printer.

Videojet 2340

Do the following tasks to drain the Videojet 2340 printer:

1 Navigate to *Tools* > *Setup* > *Consumables* from the Home page. The Consumables screen appears (see Figure 7-5).

Figure 7-5: Consumables Page

2 Select *Drain Ink System*. The Drain Ink System screen appears with a message as shown in Figure 7-6.

Figure 7-6: Drain Ink System Warning

3 Touch the *Yes* icon. The next screen with the instruction to remove the ink canister appears as shown in Figure 7-7.

Figure 7-7: Remove Ink Canister

4 Remove the ink canister from the printer. The instruction to insert an empty ink canister appears as shown in Figure 7-8.

Figure 7-8: Insert Empty Ink Canister

5 Insert an empty Ink canister.

6 Remove the front plate from the printer as shown in Figure 7-9.

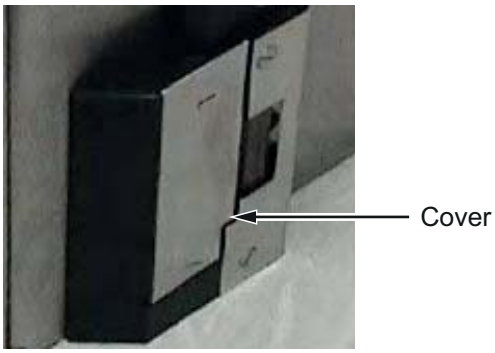

Figure 7-9: Remove Cover

7 Insert a small piece of 4mm drainage pipe into the hole in the anodized aluminium protection plate (see Figure 7-10 and Figure 7-11).

Note: *The hole in the anodized aluminum protection plate is found below the front plate.*

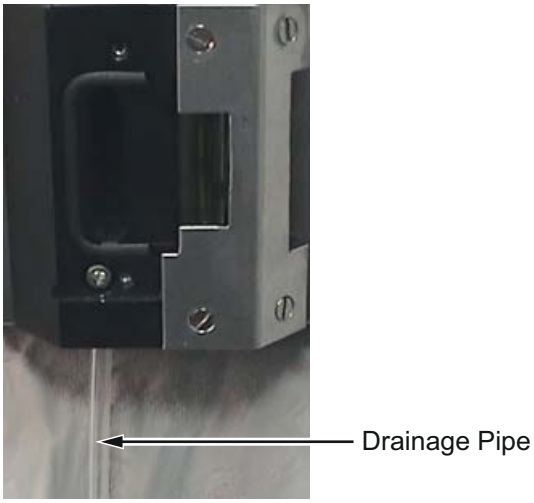

Figure 7-10: 4mm Drainage Pipe

Figure 7-11: Drainage Pipe

8 Touch the *OK* icon. The next instruction appears as shown in Figure 7-12.

Figure 7-12: Unscrew Drainage Screws

9 Access the drainage screw (see Figure 7-13 on page 7-14) and unscrew by three turns (see Figure 7-12).

Caution

EQUIPMENT DAMAGE. When you loosen the screw, do not touch the printhead area to prevent any damage to the printhead nozzles.

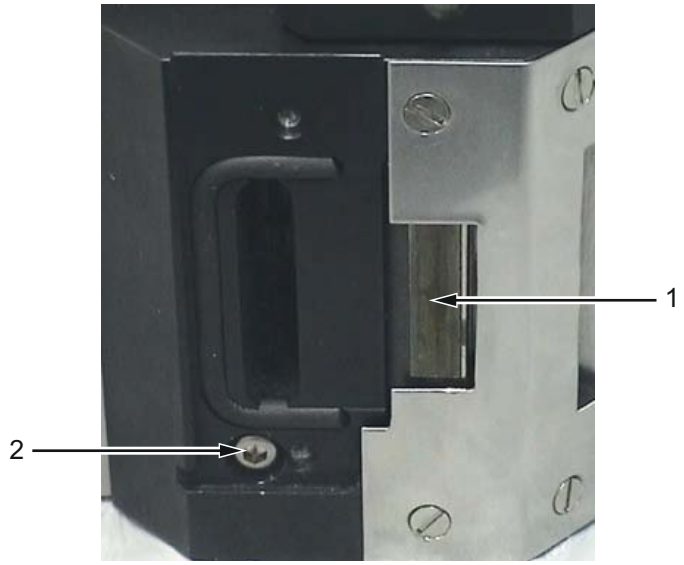

1. Printhead
2. Drainage Screw

Figure 7-13: Drainage Screw

10 Touch the *OK* icon after removing the drainage screws. The next instruction appears as shown in Figure 7-14.

Figure 7-14: Drain Ink System Message

11 Put a small canister or a piece of absorbent cloth below the drainage pipe to collect any leak in the fluid.

12 Touch the *OK* icon. The printhead starts the draining process. The message that the system is draining the ink appears as shown in Figure 7-15.

Figure 7-15: Draining in Progress

13 After a short period of time, the instruction to tilt the printer appears as shown in Figure 7-16.

Figure 7-16: Tilt the Printer

14 Tilt the printer so that all the ink is drained from the system.

15 After a short period of time, the instruction to tighten the drainage screw appears as shown in Figure 7-17.

Figure 7-17: Tighten the Drainage Screw

16 Touch the *OK* icon. The draining procedure is completed and the next instruction appears as shown in Figure 7-18.

Figure 7-18: Draining Complete

17 Remove the drainage tube and refit the front plate unless continuing on to the "Preparation for Shipping" on page 7-26.

The printer is now drained.

Videojet 2351 and 2361

Tools Required

Tool or Supply	Quantity
Shipping Plate	1
6mm OD Tubing	1
Waste Container	1
Empty Ink Canister	1

Table 1: Tools and Supplies

Do the following tasks to drain the 2351/61 printer:

***Note**: The printer should be securely mounted in a level position.*

***Note:** Read the following instructions carefully. At each step of the draining process, the CLARiTY Operator Screen will display the next action required. Follow the order of the instructions on the screen to complete the procedure correctly.*

1. Make sure that the compressed air supply is connected to the printer and the air pressure is set to 4.5 bar.
2. If the printer is switched off, turn on the printer and allow the printer to start. The touch screen Home page is then displayed.
3. Navigate to *Tools* > *Setup* > *Consumables* from the Home page. The Consumables screen appears (see Figure 7-19).

Figure 7-19: Consumables Page

4 Select *Drain Ink System*. The Drain Ink System screen appears with a message as shown in Figure 7-20. Touch OK to continue to the next screen.

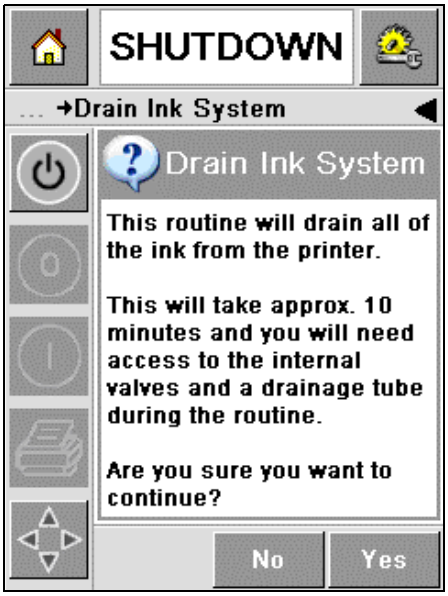

Figure 7-20: Drain Ink System Message

5 If shipping plate is already installed, continue from Step 6 on page 7-20.

If shipping plate is not installed:

a. Remove the two screws that attach the nozzle plate to the printhead as shown in Figure 7-21.

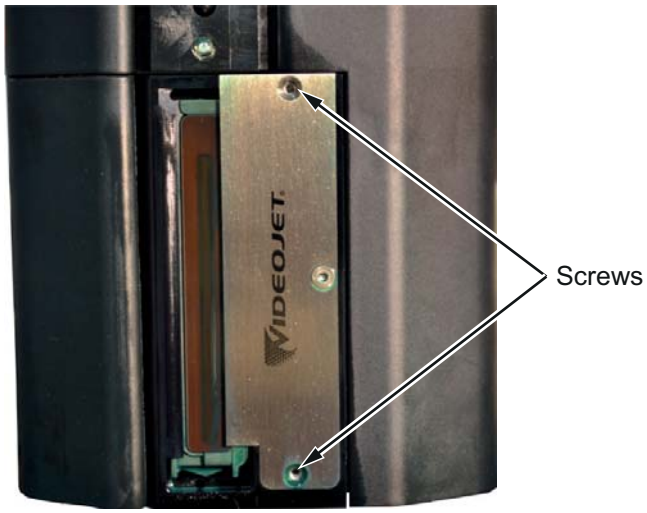

Figure 7-21: Remove Nozzle Plate Securing Screws

b. Install the shipping plate with orifice sealing on the nozzle plate using retained screws (see Figure 7-22 and Figure 7-23)

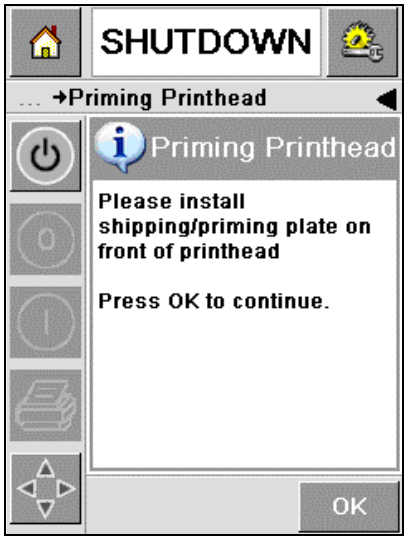

Figure 7-22: Install Shipping Plate

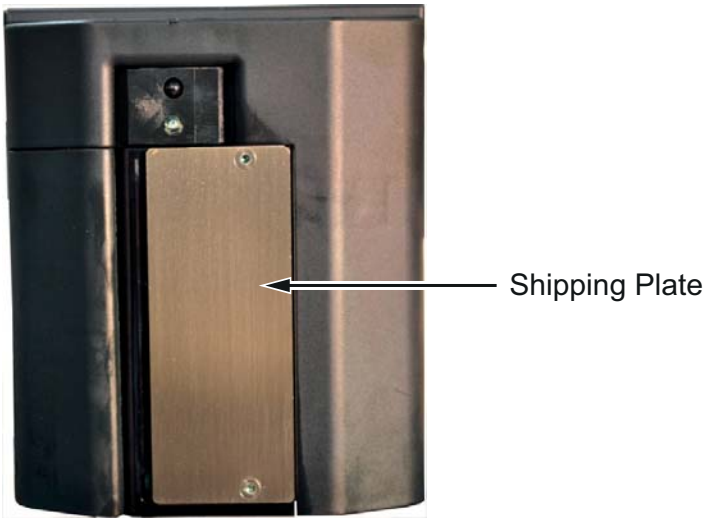

Figure 7-23: Printhead with Shipping Plate

6 Remove the ink canister from the printer (see Figure 7-24).

Figure 7-24: Remove Ink Canister

7 Fit an empty ink canister (see Figure 7-25). The system will detect when a new canister is inserted into the printer.

Figure 7-25: Insert Empty Ink Canister

8 Open the printer cover by removing the two screws (see Figure 7-26).

Figure 7-26: Remove Printer Cover

9 Disconnect the pipe connection on the monoblock end of the red ink valve, and then fit a drain tube to the same port on the red ink valve (see Figure 7-27 and Figure 7-28).

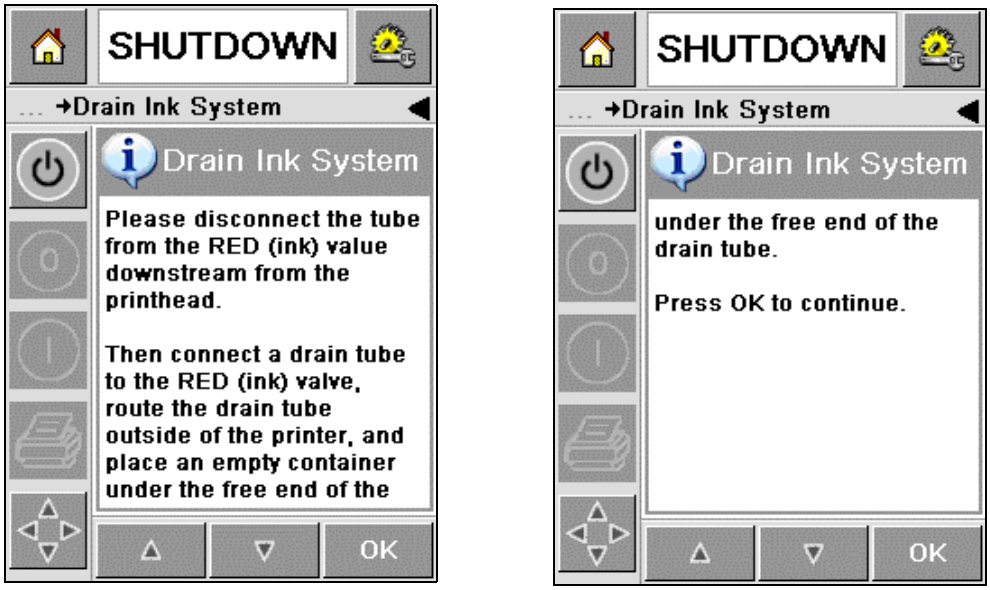

Figure 7-27: Pipe Connection Instructions

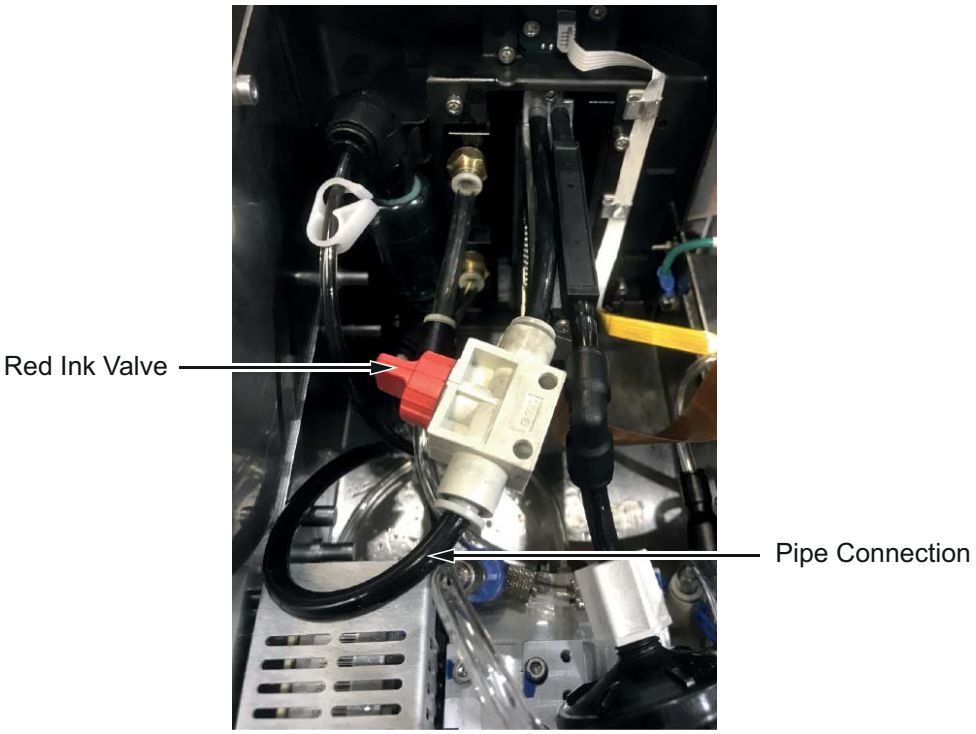

Figure 7-28: Disconnect and Attach the Drain Tube

10 Make sure that the ink valve is open and the pinch clamp in the reclaim pipe is open (see Figure 7-29).

Figure 7-29: Valve and Clamp Positions Instruction

11 Tilt the printer backwards (printhead end raised) as described in Figure 7-30, and then touch OK to start the draining process.

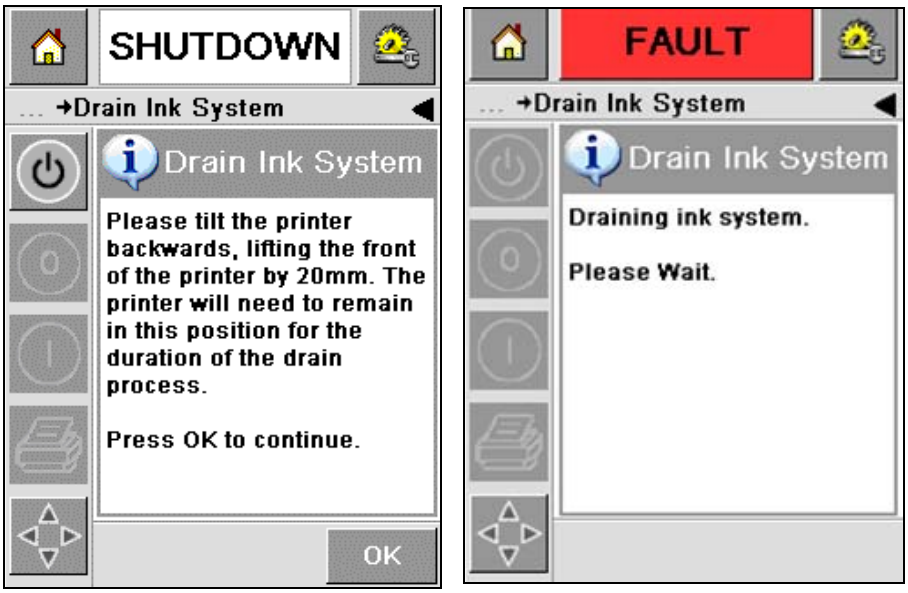

Figure 7-30: Printer Tilt Instruction

12 Once the system has drained, disconnect the drain tube from the red ink valve and reconnect the ink pipe to the red ink valve (see Figure 7-31 and Figure 7-32 on page 7-24).

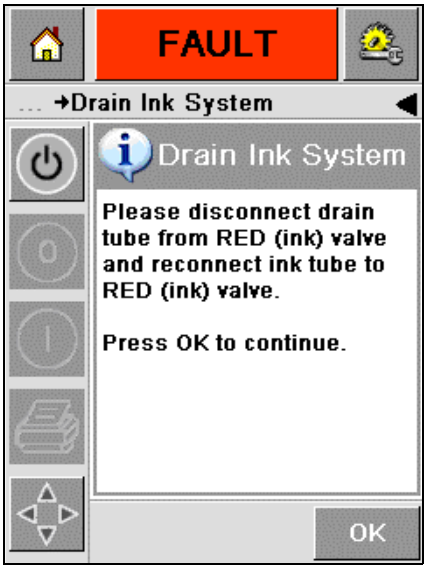

Figure 7-31. Ink Tube Connections

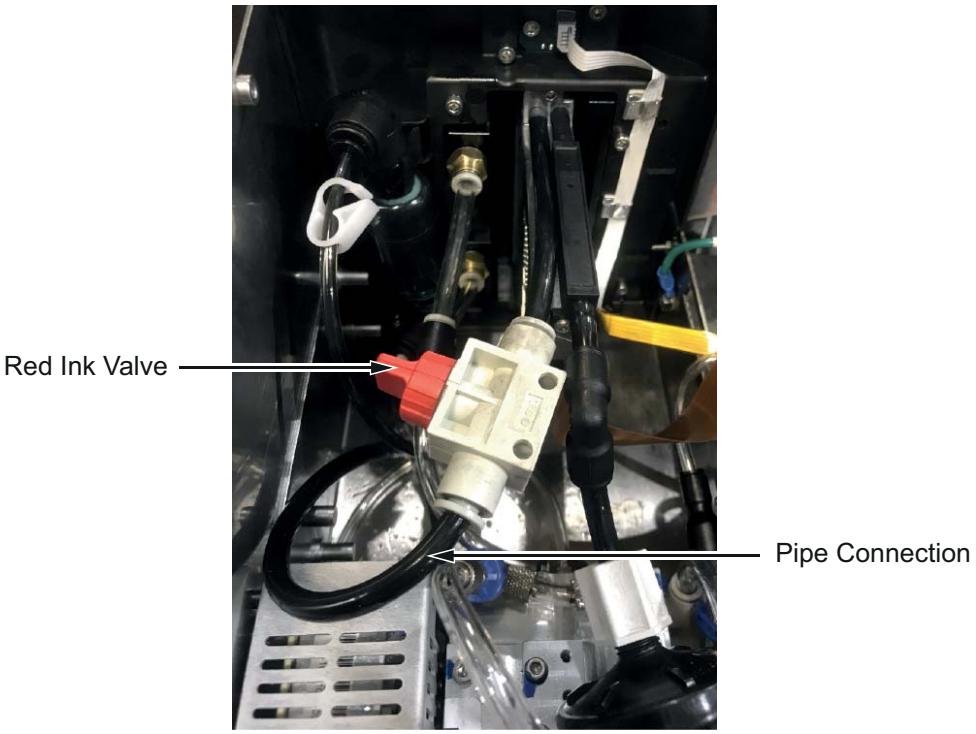

Figure 7-32: Disconnect and Attach the Pipe Connection

13 Remove the shipping/priming plate from the printhead and refit the nozzle plate.

Figure 7-33. Priming Plate Removal Message

14 Refit the printer cover and then touch OK to finish.

Figure 7-34. Draining Complete Message

The printer is now drained.

Preparation for Shipping

If the printer must be shipped to another location, use the following procedure to make sure that there is no ink leakage during transportation.

This procedure applies to the Videojet 2340, 2351 and 2361.

Caution

EQUIPMENT DAMAGE. Make sure the printer has been drained correctly, before you perform the following procedure.

Do the following tasks to prepare the printer for shipping:

1. If not already open, remove the two screws securing the printer cover and open the printer.
2. Replace the stainless steel fitting located on the top of the ink reservoir with the shipping cap, stored during installation.
3. If not already removed, remove the nozzle plate and carefully clean any excess ink that may be present behind it and in the collector cup (see Figure 7-35). If fitted, replace the debris pad (see Figure 7-36 on page 7-27) using tweezers.

   Note: *Use a swab from the cleaning kit to reach completely down into the collection cup to absorb any standing ink that remains. Repeat until the swab is generally dry when removed (some ink residue may remain).*

Figure 7-35: Collector Cup

Figure 7-36: Debris Collection Pad

4 Re-fit the nozzle plate and printhead sealing/protection plate to protect the printhead during shipping.

   Note: *A printhead sealing/protection plate is shipped as standard with each printer.*

5 Insert a quantity of absorbent material inside the printer casing, around the printhead area to catch the ink that may leak during shipping.

6 Carefully close the cover again and re-fit the securing screws. Make sure that no cables or pipes are trapped.

7 Insert a clean, lint-free towel inside the ink can chute to capture any ink that may leak out during shipping.

The printer is now ready for shipping.

Videojet 2351 and Videojet 2361 - Preparing for Shipping (Wet - Distributor to End User)

In order to ship a printer in a fully primed state to an end user, the printhead sealing/protection plate, supplied with every Videojet 2351 and Videojet 2361 printer will be required.

Caution

EQUIPMENT DAMAGE. This procedure is intended to be used only while hand carrying (by a service engineer or other suitably trained personnel) the printer, from one location to another location. Do not use this procedure for the shipping of the printer by courier or other means.

Do the following tasks for preparing Videojet 2351 and Videojet 2361 printer for shipping and also to make the printer usable:

1. Make sure that the Videojet 2351 and Videojet 2361 has been fully primed.
2. Remove the two screws securing the printer cover and open the printer.
3. Replace the stainless steel fitting located on the top of ink reservoir with the shipping cap, stored previously (Refer to “How to Remove the Shipping Caps” on page 4-2).
4. Remove the nozzle plate and carefully clean any excess ink that may be present in the collector cup. If fitted, replace the debris pad (see Figure 7-36 on page 7-27) using tweezers.

   Note: *Carefully store the nozzle plate and screws during shipping.*

5. Fit the printhead sealing/protection plate with the two screws provided.

   Note: *Make sure a secure seal is formed between the plate and printhead.*

6. Carefully close the cover again and re-fit the securing screws, ensuring no cables or pipes become trapped.
7. The existing (full) ink canister should not be removed, but checked to ensure it is screwed fully 'home'

The printer is now ready for shipping.

Note: *On arrival, allow the ink to settle by laying the printer on a flat surface for several minutes.*

8. Remove the securing screws and open the printer cover.

9 Remove the 'shipping cap' from the ink reservoir and replace with the stainless steel fitting.

10 Close and secure the printer cover.

11 Remove the printhead sealing/protection plate and refit the nozzle plate.

12 Power up the printer.

The printer is now ready for use.

Troubleshooting

8

This chapter contains the following topics:

- Fault and Warning Messages
- Troubleshooting the Faults
- Monoblock Vacuum Test Procedure

Fault and Warning Messages

When a warning or a fault condition occurs, the CLARiTY operator interface displays the related message at the top of the screen (see Figure 8-1).

Table 8-1 describes what the different background colors in the title bar of the operator interface mean.

Color	Condition	Result
Red	Critical Fault	The printer will stop printing
Yellow	Warning	The printer will continue printing
Grey	Optional/Configurable	Depending on the user configuration this may or may not be an operational fault.

Table 8-1: Background Color Interpretation

Warnings

The CLARiTY displays all the warning messages on an amber color background (see Figure 8-1). The printer continues to operate in a warning condition.

Figure 8-1: Ink Low Warning

When you touch the warning message area on CLARiTY, instructions to clear the message are displayed.

Figure 8-2 shows the ink low warning message, and gives the instructions to clear the warning by replacement of the empty ink canister with a new ink canister. Follow the instructions displayed on the screen to clear the warning.

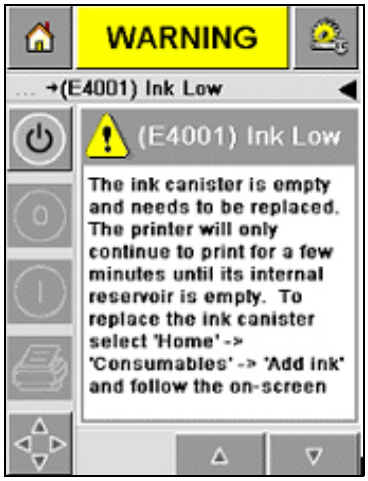

Figure 8-2: Ink Low Warning

Faults

The CLARiTY displays all the fault messages on a red color background (see Figure 8-3 on page 8-3). During a fault condition, the printer does not operate. The printer continues the operation only after the fault is cleared. Figure 8-3 on page 8-3 shows that the ink canister is empty and Figure 8-4 shows the instruction to clear the *Out of Ink* fault.

Figure 8-3: Out of Ink Fault

Figure 8-4: Out of Ink Fault Message

15 Way I/O Connector

When a warning or fault message appears on CLARiTY, the contacts on the 15 way I/O connector (see Figure 8-5), change the state.

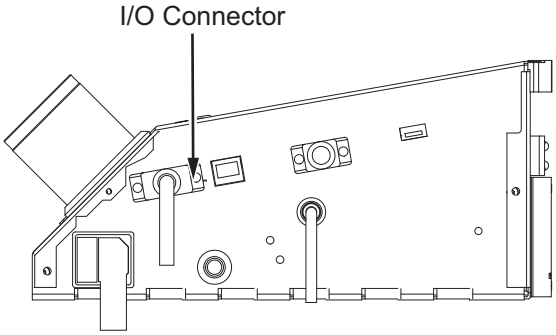

Figure 8-5: I/O Connector

Table 8-2 shows the relevant pin numbers for a fault or warning output. The customer can interlock the printer into the production line using these outputs (if required).

Pin	Purpose
1	24V DC Supply
2	Print (PNP)
3	0V DC
4	Line Select 0 (IN)
5	Line Select 1 (IN)
6	Line Select 2 (IN)
7	Fault Out (COM) Output 1
8	Fault Out (N/O) Output 2
9	Warning Output (PNP) Output 3
10	Spare Output (PNP)
11	Line - Strobe (IN)
12	0V DC
13	Line Select 3 (IN)
14	Encoder Channel B (IN)
15	Encoder Channel A (IN)

Table 8-2: PIN Numbers

Caution

The power (current) supplied from the Videojet 2300 series printer is very low, that is, 100mA maximum.

Fault and Warning Messages

This section details all of the fault and warning messages that can be found in Release 8 of the CLARiTY Software 402080 and the relevant actions required to clear these messages.

Code	Type	Title	Cause	Solution
(E1000)	Critical Fault	Image Update Failure	CLARiTY was not able to update the current image before the next print was required. This usually occurs because products are too close together.	Touch the *Clear* button to enable printing to be restarted
(E1001)	Critical Fault	Count Limit Reached	One or more of the counters in the image has reached the end value set in the image design.	Select a new job Touch the *Clear* button to enable printing to be restarted.
(E1002)	Critical Fault	Operation Aborted	The operation of the printer was intentionally aborted by a host control system.	When ready to do so, the host control system will clear this abort condition, and then this fault message will automatically clear and the printer will resume operation.
(E1003)	Critical Fault	Realtime Clock Fault	There is a problem with the Real-time Clock which is required for the system to operate correctly.	Replace the main PCB.
(E1004)	Warning	Backup battery is flat	The battery which powers the printer's clock is flat. This means that the date and time, the currently selected job and some performance data will be lost when the printer is switched off.	1. Check that the battery link (Link 5) is present. 2. If the fault persists then change the main PCB.

Table 8-3: Fault and Warning Messages

Code	Type	Title	Cause	Solution
(E1005)	Critical Fault	Print Limit Exceeded	The current job was selected with a print limit (i.e. a limit on the number of times the job can be printed). This limit has been reached but the printer has received a further print signal that would have exceeded the limit.	This error can be cleared after you select a new job. Alternatively, a job selection command or variable data update from an external source will also make this error clearable.
(E1006)	Critical Fault	Image Update Failure	CLARiTY was unable to update the image that will be printed next. This usually occurs because products are too close together.	Touch the *Clear* button to enable printing to be restarted.
(E1008)	Critical Fault	Power Failure Detected	A serious drop in the mains power has been detected. In order to protect the printer from damage, the high voltage circuits have been switched off.	1. Turn on the printer to resume printing. 2. If the problem persists, call your maintenance engineer or local service representative.
(E1009)	Critical Fault	Corrupt MAC Address	The MAC address of this printer is corrupt and the printer cannot function without a valid MAC address.	Contact your maintenance engineer or local service representative who will be able to correct this problem.
(E1010)	Critical Fault	Invalid Line	The line selection inputs have requested a line that is not configured.	1. Use CLARiTY Configuration Manager to check that the correct number of lines have been setup for this system. 2. Check if the line selection inputs are connected properly. 3. Touch the *Clear* button to clear this warning message.

Table 8-3: Fault and Warning Messages (Continued)

Code	Type	Title	Cause	Solution
(E1011)	Critical Fault	Production Disabled	A request to print a product has been received for a line that production has been disabled on.	1. Touch the *Job* button on the Home screen 2. Check if the line configuration is correct. 3. Touch the *Clear* button to clear this fault message.
(E1012)	Critical Fault	No Line Selected	A print signal has been received for a product without any line selection.	1. Check if the line selection system is functioning correctly. 2. Touch the *Clear* button to clear this fault message.
(E1100)	Warning	Invalid Job File - bad field reference	The Job file is invalid and needs to be corrected using CLARiSOFT. There is a circular reference between fields in the Job file.	1. Use CLARiSOFT to check and correct the relationships between fields in this Job file. 2. Download the corrected file to CLARiTY. 3. Touch the *Clear* button to clear this fault message.
(E1101)	Warning	Invalid Job File - missing data source field	The Job file is invalid and needs to be corrected using CLARiSOFT A field in the Job file refers to another field for its source of data, but that field is missing from the job file.	1. Use CLARiSOFT to ensure that all data source fields used in the Job file are present and correct in the Job file. 2. Download the corrected file to CLARiTY.
(E1102)	Warning	Invalid Job File - duplicate named fields	The Job file is invalid and needs to be corrected using CLARiSOFT. Duplicate field names were found in the Job file.	1. Use CLARiSOFT to remove or rename fields so that there are no duplicates. Then, download the corrected file to CLARiTY. 2. Touch the *Clear* button to clear this fault message.
(E1103)	Warning	Invalid Job File - invalid graphic	The Job file is invalid and needs to be corrected using CLARiSOFT. The Job file refers to a missing or invalid graphic bitmap file.	1. Use CLARiSOFT to check and ensure that all bitmap files, used by this Job file displays properly in CLARiSOFT. 2. Download the corrected file to CLARiTY. 3. Touch the *Clear* button to clear this fault message.

Table 8-3: Fault and Warning Messages (Continued)

Code	Type	Title	Cause	Solution
(E1104)	Warning	Invalid Job File - invalid date field	The Job file is invalid and needs to be corrected using CLARiSOFT. The Job file you are trying to select contains an incorrectly specified Date Calculation. The Default Offset for the date falls outside of the date range specified by the Minimum and Maximum user concession.	1. Use CLARiSOFT to correct this error in the Job file. 2. Download the corrected file to CLARiTY. 3. Touch the *Clear* button to clear this fault message.
(E1105)	Warning	Invalid Job File - Multiple Transmitted Fields	The Job file is invalid and needs to be corrected using CLARiSOFT. A Transmitted Field attribute was found on more than one field. Only one field can be tagged as the transmitted field.	1. Use CLARiSOFT to correct this error in the Job file. 2. Download the corrected file to CLARiTY. 3. Touch the *Clear* button to clear this fault message.
(E1200)	Warning	Invalid Job File - invalid barcode character	The Job file is invalid and needs to be corrected using CLARiSOFT. A barcode in the Job file contains characters which are not in the character set of the barcode type being used.	1. Use CLARiSOFT to check and correct the barcode fields in the Job file 2. Then, download the corrected file to CLARiTY. 3. Touch the *Clear* button to clear this fault message.
(E1201)	Warning	Invalid Job File - invalid barcode check digit	The Job file is invalid and needs to be corrected using CLARiSOFT. The check digit supplied for a barcode in the Job file is invalid.	1. Use CLARiSOFT to check and correct the barcode fields in the Job file. 2. Download the corrected file to CLARiTY. 3. Touch the *Clear* button to clear this fault message.

Table 8-3: Fault and Warning Messages (Continued)

Code	Type	Title	Cause	Solution
(E1202)	Warning	Invalid Job File - EAN barcode out of specification.	The Job file is invalid and needs to be corrected using CLARiSOFT. An EAN barcode in the Job file contains more than 48 characters, which is the maximum length for this type of barcode.	1. Use CLARiSOFT to check and correct the EAN barcode fields in the Job file. 2. Then, download the corrected file to CLARiTY. 3. Touch the Clear button to clear this fault message.
(E1203)	Warning	Invalid Job File - EAN barcode out of spec	The Job file is invalid and needs to be corrected using CLARiSOFT. The field for an EAN128 barcode does not contain enough data to form a valid Application Identifier.	1. Use CLARiSOFT to check and correct the EAN128 barcode fields in the Job file. 2. Download the corrected file to CLARiTY. 3. Touch the *Clear* button to clear this fault message.
(E1204)	Warning	Invalid Job File - EAN barcode out of spec.	The Job file is invalid and needs to be corrected using CLARiSOFT. An EAN128 barcode field contains an application identifier containing non-numeric data, but EAN128 application identifiers must be numeric.	1. Use CLARiSOFT to check and correct the EAN128 barcode fields in the Job file. 2. Download the corrected file to CLARiTY 3. Touch the *Clear* button to clear this fault message.
(E1205)	Warning	Invalid Job File EAN barcode out of spec	The Job file is invalid and needs to be corrected using CLARiSOFT. EAN128 barcode fields with an application identifier of 23 should contain a length digit following the application identifier.	1. Use CLARiSOFT to check and correct the EAN128 barcode fields in the Job file. 2. Download the corrected file to CLARiTY. 3. Touch the *Clear* button to clear this fault message.

Table 8-3: Fault and Warning Messages (Continued)

Code	Type	Title	Cause	Solution
(E1206)	Warning	Invalid Job File - EAN barcode out of spec.	The Job file is invalid and needs to be corrected using CLARiSOFT. An EAN128 barcode field in the Job file does not have the number of characters that are specified by its application identifier.	1. Use CLARiSOFT to check and correct the EAN128 barcode fields in the Job file. 2. Download the corrected file to CLARiTY. 3. Touch the *Clear* button to clear this fault message.
(E1207)	Warning	Invalid Job File - EAN barcode out of spec.	The Job file is invalid and needs to be corrected using CLARiSOFT. An EAN128 barcode field in the Job file contains variable length data followed by a separator character; separator characters should not be used to terminate data in an EAN128 barcode.	1. Use CLARiSOFT to check and correct the EAN128 barcode fields in the Job file. 2. Download the corrected file to CLARiTY. 3. Touch the *Clear* button to clear this fault message.
(E1208)	Warning	Invalid Job File - EAN barcode out of spec.	The Job file is invalid and needs to be corrected using CLARiSOFT. An EAN128 barcode field in the Job file contains data that is out of range (e.g. an hour field set to 25 or a month field set to 13).	1. Use CLARiSOFT to check and correct the EAN128 barcode fields in the Job file. 2. Download the corrected file to CLARiTY. 3. Touch the *Clear* button to clear this fault message.

Table 8-3: Fault and Warning Messages (Continued)

Code	Type	Title	Cause	Solution
(E1209)	Warning	Invalid Job File - EAN barcode out of spec.	The Job file is invalid and needs to be corrected using CLARiSOFT An EAN128 barcode field in the Job file contains an application identifier that requires a digit to specify the position of the decimal point, but this digit is not present.	1. Use CLARiSOFT to check and correct the EAN128 barcode fields in the Job file. 2. Download the corrected file to CLARiTY. 3. Touch the *Clear* button to clear this fault message.
(E1210)	Warning	Invalid Job File - EAN barcode out of spec.	The Job file is invalid and needs to be corrected using CLARiSOFT An EAN128 barcode field in the Job file contains an application identifier that requires a check digit, but this check digit was either missing or invalid.	1. Use CLARiSOFT to check and correct the EAN128 barcode fields in the Job file. 2. Download the corrected file to CLARiTY. 3. Touch the *Clear* button to clear this fault message.
(E1211)	Warning	Invalid Job File - EAN barcode out of spec	The Job file is invalid and needs to be corrected using CLARiSOFT An EAN128 barcode could not be rendered at a size of 165mm or less which is the maximum length for this type of barcode.	1. Use CLARiSOFT to check and correct the EAN128 barcode fields in the Job file. 2. Download the corrected file to CLARiTY. 3. Touch the *Clear* button to clear this fault message.
(E1212)	Warning	Invalid Job File - bar-code length incorrect	The Job file is invalid and needs to be corrected using CLARiSOFT. A barcode field in the Job file does not have the expected number of characters.	1. Use CLARiSOFT to check and correct the barcode fields in the Job file. 2. Download the corrected file to CLARiTY. 3. Touch the *Clear* button to clear this fault message.

Table 8-3: Fault and Warning Messages (Continued)

Code	Type	Title	Cause	Solution
(E1213)	Warning	Invalid Job File - bar-code out of limits	The Job file is invalid and needs to be corrected using CLARiSOFT. A barcode field in the Job file overruns the edge of the image and it is not possible to extend the image area to accommo-date the barcode	1. Use CLARiSOFT to check and correct the barcode fields in the Job file. 2. Download the corrected file to CLARiTY. 3. Touch the *Clear* button to clear this fault message.
(E1214)	Warning	Invalid Job File - Invalid Checksum Data	The Job file is invalid and needs to be corrected using CLARiSOFT. A field in the Job file uses a checksum (e.g. an EAN13 barcode with a price verifier digit) but the data supplied to calculate the checksum were not valid.	1. Use CLARiSOFT to check and correct fields using checksums in the Job file. 2. Download the corrected file to CLARiTY. 3. Touch the *Clear* button to clear this fault message.
(E1215)	Warning	Invalid Job File - invalid barcode	The height supplied for a barcode in the Job file is smaller than the minimum allowed by the barcode specification. height The Job file is invalid and needs to be corrected using CLARiSOFT.	1. Use CLARiSOFT to check and correct the barcode fields in the Job file. 2. Download the corrected file to CLARiTY. 3. Touch the *Clear* button to clear this fault message.
(E1216)	Warning	Invalid Job File - Barcode Symbology Not Installed	The Job file contains a barcode symbology that is not installed in this printer.	1. Use CLARiSOFT to remove the barcode from the Job file. 2. Download the corrected file to the printer. 3. Touch the *Clear* button to clear this fault message.

Table 8-3: Fault and Warning Messages (Continued)

Code	Type	Title	Cause	Solution
(E1217)	Warning	Invalid Job File - Undefined Format Identifier	The Job file is invalid and needs to be corrected using CLARiSOFT A Data Matrix Barcode field in the job file uses a Public Format ID which is not currently defined.	Touch the *Clear* button to clear this fault message.
(E1218)	Warning	Invalid Job File - Data too long	The Job file is invalid and needs to be corrected using CLARiSOFT. A Data Matrix Barcode field in the job file contains too many data characters for the selected dimensions.	Touch the *Clear* button to clear this fault message.
(E1219)	Warning	Invalid Job File - Invalid Barcode Size	The Job file is invalid and needs to be corrected using CLARiSOFT. A Data Matrix Barcode field in the job file has invalid dimensions.	Touch the *Clear* button to clear this fault message.
(E1220)	Warning	Invalid Job File - Invalid Barcode ECC Type	The Job file is invalid and needs to be corrected using CLARiSOFT. A Data Matrix Barcode field in the job file has an unsupported ECC type. Only ECC 200 is currently supported.	Touch the *Clear* button to clear this fault message.

Table 8-3: Fault and Warning Messages (Continued)

Code	Type	Title	Cause	Solution
(E1221)	Warning	Invalid Job File -Barcode uses unsupported coding	The Job file is invalid and needs to be corrected using CLARiSOFT. A Data Matrix Barcode field in the job file uses a form of data compression not currently supported by CLARiTY.	Touch the *Clear* button to clear this fault message.
(E1222)	Warning	Invalid Job File - Barcode encoding failed	The Job file is invalid and needs to be corrected using CLARiSOFT. A Data Matrix Barcode field in the job file failed to encode into an valid image.	Touch the *Clear* button to clear this fault message.
(E1223)	Warning	Invalid Job File - Invalid Date Refer-ence	The Job file contains a date reference not supported by this printer.	1. Use CLARiSOFT to set the 'Reference Date' for all Calculated Dates to 'Current Date'. 2. Download the corrected file to the printer. 3. Touch the *Clear* button to clear this fault message.
(E1224)	Warning	Invalid Job File - Invalid Date Round-ing	The Job file contains a date with a rounding calculation that is not supported by this printer.	1. Use CLARiSOFT to remove the Rounding for all Calculated Dates. 2. Download the corrected file to the printer. 3. Touch the *Clear* button to clear this fault message.
(E1225)	Warning	Invalid Job File - Invalid Counter	The Job file contains a counter that is not supported by this printer.	1. Use CLARiSOFT to remove all counters from the job. 2. Download the corrected file to the printer. 3. Touch the *Clear* button to clear this fault message.

Table 8-3: Fault and Warning Messages (Continued)

Code	Type	Title	Cause	Solution
(E1226)	Warning	Invalid Job File - Invalid Price	The Job file contains a price field that is not supported by this printer.	1. Use CLARiSOFT to remove all price fields from the job. 2. Download the corrected file to the printer. 3. Touch the *Clear* button, to clear this fault message.
(E1227)	Warning	Invalid Job File - Invalid Transmitted Field	The Job file contains a transmitted field that is not supported by this printer.	1. Use CLARiSOFT to disable the 'Transmitted Field' option for all fields in the job. 2. Download the corrected file to the printer. 3. Touch the *Clear* button to clear this fault message.
(E1228)	Warning	Invalid Job File - Invalid Graphic Field	The Job file contains a graphic field that is not supported by this printer.	1. Use CLARiSOFT to remove all Logo and Drawing fields in the job. 2. Download the corrected file to the printer. 3. Touch the *Clear* button to clear this fault message.
(E1229)	Warning	Invalid Job File - Invalid Graphic	The Job file contains a graphic field that is not supported by this printer.	1. Use CLARiSOFT to remove all Logo fields in the job. 2. Then, download the corrected file to the printer. 3. Touch the *Clear* button to clear this fault message.
(E1230)	Warning	Invalid Job File - Invalid Drawing	The Job file contains a Drawing field that is not supported by this printer.	1. Use CLARiSOFT to remove all drawing fields in the job. 2. Download the corrected file to the printer. 3. Touch the *Clear* button to clear this fault message.
(E1231)	Warning	Invalid Job File - Invalid Paragraph Field	The Job file contains a Paragraph field that is not supported by this printer.	1. Use CLARiSOFT to remove all Paragraph fields in the job. 2. Download the corrected file to the printer. 3. Touch the Clear button to clear this fault message.

Table 8-3: Fault and Warning Messages (Continued)

Code	Type	Title	Cause	Solution
(E1232)	Warning	Invalid Job File - PDF417 Barcode out of Spec.	A PDF417 or Micro PDF417 barcode field in the Job file contains more columns that the barcode symbology supports.	1. Use CLARiSOFT to check and correct the PDF417 and Micro- PDF417 barcode fields in the Job file. 2. Download the corrected file to CLARiTY.
(E1233)	Warning	Invalid Job File - PDF417 Barcode out of Spec.	A PDF417 or Micro PDF417 barcode field in the Job file contains more rows that the barcode symbology supports.	1. Use CLARiSOFT to check and correct the PDF417 and Micro-PDF417 barcode fields in the Job file. 2. Download the corrected file to CLARiTY.
(E1234)	Warning	Invalid Job File - PDF417 Barcode out of Spec.	A PDF417 or Micro PDF417 barcode field in the Job file contains more characters than can be encoded with the specified column and maximum row sizes.	1. Use CLARiSOFT to increase the number of columns or rows in the PDF417 and Micro-PDF417 barcode fields in the Job file. 2. Download the corrected file to CLARiTY. 3. Touch the *Clear* button to clear this fault message.
(E1235)	Warning	Invalid Job File - EAN13 Price Too Large	Ean13PriceToo Big/ Text. The Job file is invalid and needs to be corrected using CLARiSOFT. The EAN13 barcode contains a price that is too large to be encoded within the barcode.	1. Use CLARiSOFT to check and correct the maximum price value for price field that is referenced by the barcode. 2. Touch the *Clear* button to clear this warning message.

Table 8-3: Fault and Warning Messages (Continued)

Code	Type	Title	Cause	Solution
(E1300)	Optional/ Configu-rable	Slave Printer Absent	This printer is configured as the Master to a group of Slave printers, Slave printer is # assigned to this Master, but it is not responding.	1. Check if the wiring connec-tions between the Master printer and Slave %1 printer. 2. If there is a fault, turn off both Master and Slave %1 and then try to clear this fault. 3. If the problem persists, call your maintenance engineer or local service representa-tive. 4. If you want to continue pro-duction without Slave %1, navigate to: *Tools* > *Setup* > *Printheads* > *Slave#* and un-assign Slave#.
(E1301)	Optional/ Configura ble	Master Printer Absent	This printer is configured as a Slave printer to a Master printer in a group of printers, The Master printer is not responding to this Slave printer.	1. Check the wiring between this printer and the Master printer 2. Turn off both the printers and then try to clear this fault. 3. If the problem persists, call your maintenance engineer or local service representa-tive.
(E1302)	Optional/ Configu-rable	Slave Job Select Failed	Slave Printer # failed to select the current job.	1. Check the wiring between this printer and the Master printer. 2. If there is a fault, turn off both the printers and try to clear this fault. 3. If the problem persists, call your maintenance engineer or local service representative
(E4000)	Critical Fault	Out of Ink	The printer has run out of ink. A new ink canister is required.	1. Select *Home*> *Consumables*> *Add ink* and follow the on-screen instructions. 2. Touch the Clear button after the ink canister is added to clear the fault message.

Table 8-3: Fault and Warning Messages (Continued)

Code	Type	Title	Cause	Solution
(E4001)	Warning	Ink Can Empty	The ink canister is empty and needs to be replaced. The printer will only continue to print for a few minutes until its internal reservoir is empty.	1. To replace the ink canister, select *Home> Consumables> Add ink* and follow the on-screen instructions. 2. This warning will automatically clear when a new ink canister is added.
(E4002)	Critical Fault	Ink Sensor Calibration Required	The Ink Sensor requires calibration.	1. Make sure that the sensor is connected to an empty ink reservoir 2. Select *Tools > Setup > Consumables> Calibrate Empty Level*. This fault will automatically clear when the sensor has been calibrated.
(E4003)	Critical Fault	Ink Sensor Calibration Required	The Ink Sensor requires calibration.	1. Make sure that the sensor is connected to the ink reservoir and a full canister of ink is installed. 2. Select *Tools> Setup > Consumables > Calibrate Ink Sensor*. This fault will automatically clear when the sensor has been calibrated.
(E4004)	Critical Fault	Ink Sensor Error	The Ink Sensor is not connected correctly.	1. Turn off the machine and check the ink sensor cable. 2. If the problem persists, call your maintenance engineer or local service representative.
(E4005)	Critical Fault	Ink Sensor Error	The Ink Sensor is not functioning correctly.	1. Turn off and on to try and clear this fault. 2. If the problem persists, call your maintenance engineer or local service representative.
(E4006)	Critical Fault	Set Print-head Code	The printhead code has not been set for this printhead.	Enter the 4 digit printhead code value from the label on the printhead into the parameter at *Tools > Setup > Printhead> Printhead Code* to clear this fault. (For Videojet 2340 only).

Table 8-3: Fault and Warning Messages (Continued)

Code	Type	Title	Cause	Solution
(E4007)	Critical Fault	Print Queue Overflow	Printhead # has detected more than five products between the print sensor and the printhead. This may be due to pack spacing or false sensor triggers, or a faulty sensor.	1. Touch the *Clear* button to clear this fault message and then try to resume printing. 2. If the problem persists, call your maintenance engineer or local service representative.
(E4008)	Critical Fault	Printer Not Ready	Printhead # has been triggered to begin printing on a new product before completing the print for the previous product. This could be due to inadequate product spacing or false print sensor triggers, or incorrect fixed speed setting (if you are running in fixed speed mode, without a conveyor speed encoder), or a faulty print sensor or faulty printhead.	1. Touch the *Clear* button to try and resume printing. 2. If the problem persists, call your maintenance engineer or local service representative.
(E4009)	Critical Fault	Incompatible Ink Detected	The system has detected a potential incompatibility with the ink that is being used in the printer.	1. To verify compatibility, navigate to *Consumables> Add Ink* 2. Enter the code on the ink bottle in the *Add Ink* Screen.
(E4010)	Critical Fault	Communica-tions Error	The printer's internal communications malfunctioned.	1. If the problem persists, call your maintenance engineer or local service representative. 2. Touch the Clear button to continue printing.

Table 8-3: Fault and Warning Messages (Continued)

Code	Type	Title	Cause	Solution
(E4011)	Critical Fault	Thermistor Fault	The thermistor inside the printhead is reporting an open circuit value.	1. Turn off the printer 2. Check if the printhead cable and adapter board are firmly plugged in. 3. Check that the PCB printer type link (LK7) is in the correct position (1-2 for the Videojet 2340 printhead, 2-3 for the Videojet 2361 printhead). 4. If the problem persists, call your maintenance engineer or local service representative. ***Note:*** *Rev 4 boards dip switches are used to set the printer type.*
(E4012)	Critical Fault	Thermistor Fault	The thermistor inside the printhead is reporting a short circuit value.	1. Turn off the printer 2. Check if the printhead cable and adapter board are firmly plugged in. 3. Check if the cable is in good condition and not trapped. 4. If the problem persists, call your maintenance engineer or local service representative.
(E4013)	Critical Fault	Printhead Volts Error	The Printhead volts are outside the working range.	1. Turn off the printer and on to try and clear the fault. 2. Try to clear the fault message. 3. If the problem persists, call your maintenance engineer or local service representative.
(E4014)	Critical Fault	24 Volts Error	The 24 Volts supply is outside the working range.	1. Turn off the printer. 2. Clear the fault. 3. If the problem persists, call your maintenance engineer or local service representative.
(E4015)	Critical Fault	5 Volts Error	The 5 Volts supply is outside the working range.	1. Turn off the printer. 2. Clear the fault. 3. If the problem persists, call your maintenance engineer or local service representative.

Table 8-3: Fault and Warning Messages (Continued)

Code	Type	Title	Cause	Solution
(E4016)	Warning	Temperature Range	The printer is operating outside of its recommended temperature range. This can cause problems with the ink which could lead to the poor print quality and eventual failure of the printer.	1. If the printer is operating in a cold environment it is recommended that the heating option is fitted. 2. Touch the *Clear* button to clear this warning.
(E4017)	Warning	No Ink Canister	No Ink Canister is installed in the chute. This means that all of the automatic cleaning operations are disabled, the print quality will deteriorate and the printer will run out of ink.	1. Select *Home* > *Consumbles* > *Add ink* 2. Follow the onscreen instructions. This warning will automatically clear when a new ink canister is added.
(E4018)	Warning	Ink Can Code Invalid	The Ink Canister code for the current bottle is invalid. This means that all of the automatic cleaning operations are disabled, the print quality will deteriorate and the printer will run out of ink.	1. Select *Home*> *Consumables*> *Add ink* 2. Follow the on-screen instructions. This warning will automatically clear when a new ink canister is added.
(E4019)	Warning	Check Setup	The current parameter settings are preventing the printer from performing cleaning cycles between products.	1. Check if the positioning of the external print sensor is the required distance from the printhead, 2. Check if the PrintSensorToPrintlineGap parameter is set correctly. 3. If the problem persists, call your maintenance engineer or local service representative. 4. Touch the *Clear* button to clear this warning.
(E4020)	Critical Fault	Prime Printhead	The Printhead Has not been primed.	1. To clear this fault navigate to *Tools* > *Setup* > *Printhead*. 2. Select the 'Prime Printhead' option and follow the onscreen messages.

Table 8-3: Fault and Warning Messages (Continued)

Code	Type	Title	Cause	Solution
(E4021)	Critical Fault	Filling Reservoir	The printer has run out of ink and is pumping ink from the ink canister.	Once this operation is completed, touch the *Clear* button to clear this fault message and resume printing.
(E4022)	Critical Fault	Add Ink Problem	The printer has failed to get any ink out of the new ink canister.	1. Check that the correct air pressure is piped into the printer, and the canister is correctly installed. 2. Touch the *Clear* button to clear this fault. 3. If this fault reappears there may be a problem with the ink canister, use a different ink canister.
(E4023)	Critical Fault	Incorrect Air Pressure	The printer does not have the correct air pressure piped into it.	1. Check if the air pressure pipe is connected to the printer and the air pressure is set to 2.5/4.5/4.5 bar. 2. To clear the fault, touch the *Clear* button after the correct air pressure is established.
(E4024)	Critical Fault	Print Gating Problem	The printer has failed to print on the last 5 boxes due to the registration and print gating settings.	1. Check if the PrintSensorToPrintLineGap and Registration parameters are set correctly so that the box is in front of the print line when printing is set to commence. 2. Alternatively, turn off PrintSensor gating through the CLARiTY Configuration manager. 3. After you set the air pressure correctly, touch the *Clear* button.
(E4025)	Critical Fault	Printhead Communica-tions	The printer was unable to establish communications with the printhead.	1. Check if the PCB is configured for the correct printhead (50mm head) 2. Check if the internal cable connecting the PCB to the printhead is firmly inserted. 3. This fault may be cleared when reliable communications have been established.

Table 8-3: Fault and Warning Messages (Continued)

Code	Type	Title	Cause	Solution
(E4026)	Critical Fault	Printhead Communica-tions	The printer was unable to establish reliable communications with the printhead.	1. Check if the printhead volts are reading 30Volts in the diagnostics menu. 2. Check if the internal cable connecting the PCB to the printhead is firmly inserted. 3. This fault may be cleared when reliable communications have been established.
(E4027)	Critical Fault	Printhead Communica-tions	The printer was unable to establish reliable communications with the printhead.	1. Check if the printhead volts are reading 30Volts in the diagnostics menu. 2. Check that the internal cable connecting the PCB to the printhead is firmly inserted. 3. This fault may be cleared when reliable communications have been established.
(E4028)	Critical Fault	Printhead Temperature Sensor Failure	The printer has detected that the printhead temperature sensor is either disconnected or faulty.	1. Turn off the printer 2. Open the printer and check if the printhead cable is firmly plugged into the printhead. 3. Turn on the printer and resume printing. 4. If the problem persists, call your maintenance engineer or local service representative, who will check printhead cable connections to the printer PCB and also the electrical continuity of the printhead cable. 5. This fault will only clear when the temperature sensor readings are valid.
(E4029)	Critical Fault	Incorrect Printhead Model	The incorrect model printhead has been detected; please power the printer off and on.	If the problem persists, call your maintenance engineer or local service representative, who will replace the printhead. This fault will only clear when the correct model of printhead is detected.

Table 8-3: Fault and Warning Messages (Continued)

Code	Type	Title	Cause	Solution
(E4030)	Critical Fault	Printhead Communica-tions	The printer was unable to establish communications with the printhead.	1. Check if the PCB is configured for the correct printhead (70.5 mm head) 2. Check if the internal cable connecting the PCB to the printhead is firmly inserted. 3. This fault may be cleared when reliable communications have been established.
(E4031)	Critical Fault	Printhead Waveform	The printer's performance can be improved by upgrading its driver waveform.	Contact your maintenance engineer or local service representative to obtain the latest driver. This warning will be cleared when the latest driver is loaded.
(E4032)	Critical Fault	Printhead Thermistor Fault	The thermistor inside the printhead is not functioning correctly and may need to be replaced.	Contact your maintenance engineer or local service representative who will be able to correct this problem. This warning may be cleared when the problem has been corrected.
(E4033)	Critical Fault	Filter Change Required	The reclaim filter has exceeded its recommended lifetime and now requires changing.	Contact your maintenance engineer or local service representative who will be able to correct this problem.
(E4034)	Critical Fault	Image Stitching – PCB Not Supported	The PCB Revision for one or more of the Slave printers is too old to support image stitching. The PCB Revision must be 2 or greater.	1. Contact your maintenance engineer or local service representative who will be able to correct this problem. 2. To clear this fault please disable image stitching using CLARiTY Configuration Manager.
(E4035)	Warning	Image Stitching – Invalid Encoder Settings	The previous Encoder settings for this printer are not supported when using image stitching. The parameter value for the Encoder Mode has been set to Quadrature and Fixed Speed Printing has been turned off.	Check these settings using CLARiTY Configuration Manager before continuing.

Table 8-3: Fault and Warning Messages (Continued)

Code	Type	Title	Cause	Solution
(E4036)	Warning	Image Stitching – Invalid Print Trigger	The previous Print Trigger settings for this printer are not supported when using image stitching. The parameter value for the Print Gating has been set to No and Print Sensor Mode may have been set to External.	Check these settings using CLARiTY Configuration Manager before continuing.
(E4037)	Warning	Image Stitching – Invalid output Configuration	The previous Output Configuration settings for this printer are not supported when using image stitching. The parameter value for the Output 3 Configuration has been set to Not Used as it is required for image stitching.	Touch the *Clear* button to clear this warning message.
(E4038)	Warning	Preventative Maintenance required	The warning time to the next preventative maintenance has passed.	Clean the drain channel and any ink build-up from the front of the printhead. Refer to the instructions in the cleaning kit.
(E4042)	Warning	Debris Pad Replacement Required	This warning is displayed when the debris pad needs to be changed.	1. Replace the reclaim pad (refer to the Pad Replacement Maintenance Instruction). 2. Touch the Clear button within 5 days to clear this warning message - printing is not interrupted.

Table 8-3: Fault and Warning Messages (Continued)

Troubleshooting the Faults

This section helps you to correct the faults that stop the printing operations.

Use Figure 8-6 to understand the parts of the Videojet 2300 printer and troubleshoot the faults.

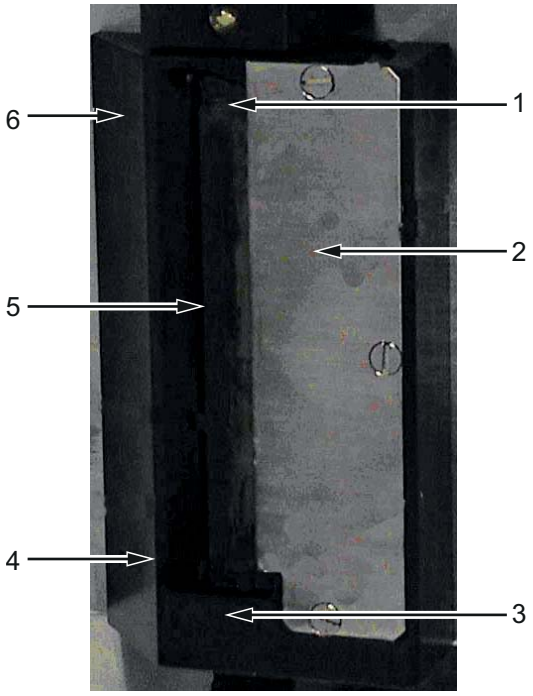

1. Printhead Nozzle Plate
2. Blow Nozzle Plate
3. Ink Collector
4. Knife Edge
5. Ink Drain Channel
6. Printhead Front Plate

Figure 8-6: Printhead Face Parts

The Print is not in the Correct Position on the Box

If the printed image does not appear on the box where you expect, it may be because of incorrect print registration setting. This can have a number of different causes:

- Incorrect value in PrintSensorToPrintLineGap parameter (Only when using external print sensor)
- Incorrect RegistrationDelay parameter
- Incorrect design of the print image in CLARiSOFT
- Incorrect conveyor speed set (Fixed Speed Mode Only)
- Incorrect conveyor speed measurement due to incorrect encoder setup or malfunction

Caution

It is essential that the Videojet 2361/Videojet 2351/Videojet 2340 printers are only used with a fully screened encoder. Failure to do so may result in equipment damage and product malfunction. Any equipment damage resulting from the use of incorrect or unscreened encoders will not be covered by the equipment warranty.

External Sensor Mode

When an external print sensor is used, the following parameters must be correctly set:

- PrintSensorToPrintLineGap
- RegistrationDelay

Refer to Figure 8-7 which describes the concept. Figure 8-8 on page 8-29 and Figure 8-9 on page 8-29 show the distance entered in CLARiTY Configuration Manager.

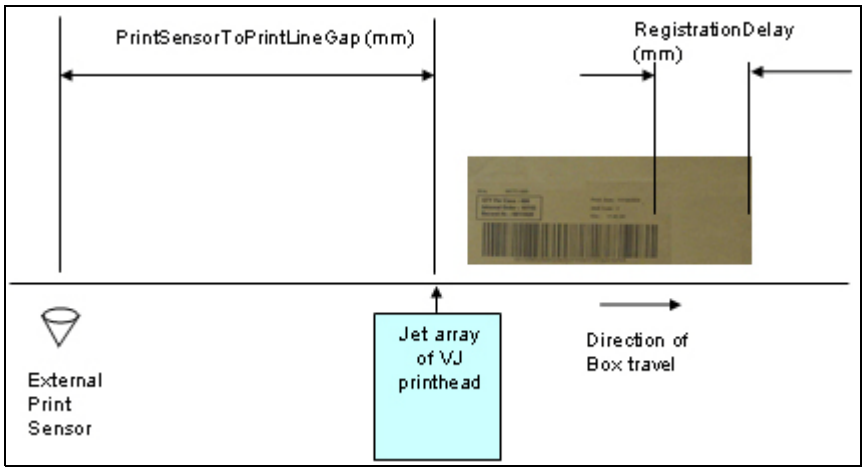

Figure 8-7: External Print Sensor

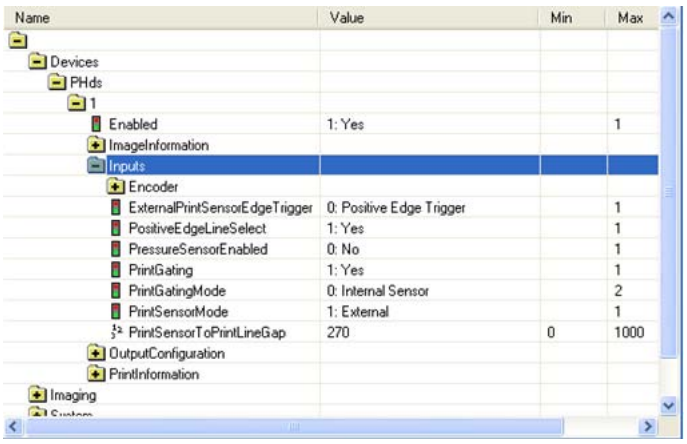

Name	Value	Min	Max
Devices			
PHds			
1			
Enabled	1: Yes		1
ImageInformation			
Inputs			
Encoder			
ExternalPrintSensorEdgeTrigger	0: Positive Edge Trigger		1
PositiveEdgeLineSelect	1: Yes		1
PressureSensorEnabled	0: No		1
PrintGating	1: Yes		1
PrintGatingMode	0: Internal Sensor		2
PrintSensorMode	1: External		1
PrintSensorToPrintLineGap	270	0	1000
OutputConfiguration			
PrintInformation			
Imaging			

Figure 8-8: PrintSensorToPrintLine Gap

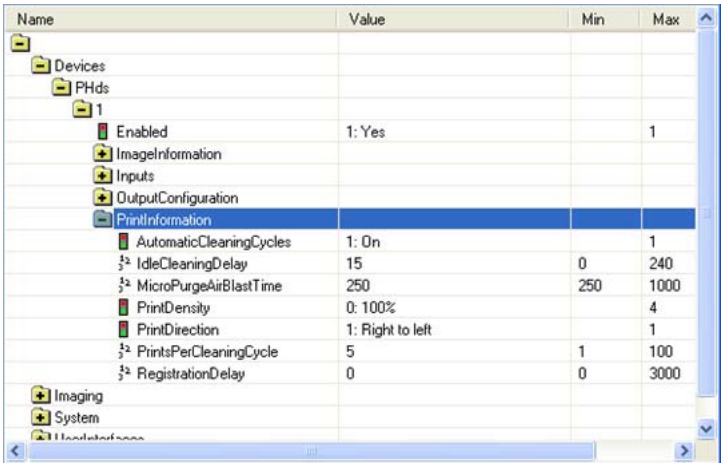

Name	Value	Min	Max
Devices			
PHds			
1			
Enabled	1: Yes		1
ImageInformation			
Inputs			
OutputConfiguration			
PrintInformation			
AutomaticCleaningCycles	1: On		1
IdleCleaningDelay	15	0	240
MicroPurgeAirBlastTime	250	250	1000
PrintDensity	0: 100%		4
PrintDirection	1: Right to left		1
PrintsPerCleaningCycle	5	1	100
RegistrationDelay	0	0	3000
Imaging			
System			

Figure 8-9: RegistrationDelay

Parameter	Explanation
PrintSensorToPrintLineGap	• This is the distance between the external print sensor and the jet array and is set in mm in the CLARiTY Configuration Manager. • This parameter, combined with the conveyor speed, allows the printer to calculate when the leading edge of the box arrives at the printers jet array.
RegistrationDelay	• When the box is calculated to arrive at the jet array, the printer delays the printing by the distance set (in mm) in this parameter. • Once the box travels the distance set in the Registration Delay parameter, the printer will begin printing the image as it was designed in CLARiSOFT.

Table 8-4: Parameters

Note: *If the image designed in CLARiSOFT contains a large white border at the start of image, (see Figure 8-10), printer includes that area for print and prints an equivalent sized empty space (i.e. nothing) before the actual data is printed.*

In Figure 8-10 there is 20mm of left margin on the image. If the product is moving right to left, the printer will print the first characters at a position equal to **Registration Delay + 20mm** from the leading edge of the box.

Figure 8-10: Registration Delay

Internal Sensor Mode

When an internal sensor is used, the 'PrintSensorToPrintLineGap' parameter is ignored but 'RegistrationDelay' is still used.

When running in Fixed Speed Mode, if the actual conveyor speed is different to the value entered in the parameter FixedPrintSpeed (in mm/sec), then not only will the print appear squashed or stretched, but the registration on the box will also be in error since it is calculated from the assumed conveyor speed.

When running in encoder mode, if the encoder roller is slipping on the belt or malfunctioning in some way, then the measured speed will also be different from the actual speed with the same resultant distortion of the image and incorrect print registration.

The Printed Image is Back to Front or Upside Down

If the printed image on the box appears to be 'back to front' or 'upside down', this is due to an incorrect parameter setup in the printer's configuration file.

The parameters that affect the appearance of the printed image are:

- MirroredImage
- PrintDirection
- PrintOrientation

Parameter Setup

Table 8-5 shows the results of incorrect parameter setup.

Example	Explanation
Videojet Ink Jet Printers	Image in correct orientation. All the parameters are setup correctly.
Videojet Ink Jet Printers	Product Direction Incorrect • The box may be moving past the head in the opposite direction to how the printer has been configured. • The 'PrintDirection' parameter needs to be correctly set. • You must view the side of the box being printed from behind the printhead and enter the direction of movement as Left-to-Right or Right-to-Left. Mirrored Image • The MirroredImage parameter is set incorrectly • For a Videojet 2300 series printer, this parameter should always be set to 'No'.

Table 8-5: Parameter Setup

Example	Explanation
Videojet Ink Jet Printers	Print Orientation Incorrect • PrintOrientation parameter incorrectly set. • Set to 0 or 180 degrees as required, depending on whether the box is upside down or the right way up at the point of coding.

Table 8-5: Parameter Setup

The Printer is Printing but is not Purging and Cleaning

This section describes the correct functionality of the purging and cleaning system.

Normal Micropurge Cleaning

Procedure:

1. Air pressure is applied to the ink inside the monoblock of the printer for a short duration (< 1 sec).
2. A small amount of ink appears on the printhead nozzle plate across the whole jet array.
3. An air blast then moves all the ink sideward, away from the jet array and down the ink drain channel.

Macropurge Cleaning

The macropurge cleaning happens in two conditions:

- When the printer first comes out of Shutdown mode.
- When button 'A' is held down for >2 Seconds.

Procedure:

1. Air pressure is applied to the ink inside the monoblock for a longer duration (>1 sec).
2. A large amount of ink appears on the printhead nozzle plate across the whole jet array.
3. The ink slowly drains under gravity into the ink collector at the bottom of the printhead.

4 After a long delay, an air blast cleans any residual ink away, in a sideward direction from the printhead nozzle plate and into the ink drain channel.

If the system is not functioning correctly, there are a number of possible reasons. The causes and the solutions are described in Table 8-6.

Causes	Solution
There is no air supply to the printer.	Restore air pressure 2.5 Bar Videojet 2340, 4.5 Bar Videojet 2351, 4.5 Bar Videojet 2361
There is air but the main air solenoid is not functioning correctly.	Check and replace if necessary
The printer is configured to run off the internal product sensor	In this state, the printer only cleans infrequently based on a time set in the parameter 'IdleCleaningDelay'
The printer is running off an external product sensor and is also configured to clean after a very large number of prints	Check and set the parameter 'CleaningCycleEveryNPrints' to a more appropriate value
The external print sensor is too close to the print array, not leaving enough time to clean the printhead between detecting the box and the box reaching the jet array line.	Move the sensor a greater distance from the printhead and reset the 'PrintSensorToPrintLine-Gap' parameter (a time of at least 0.4 seconds is required for a cleaning cycle to complete)
There may be no ink can in the printer or the ink can detection sensor is not functioning.	Removing the ink canister from the printer will disable the cleaning process
The 'purge pipe', shown in Figure 8-11 on page 8-34 is kinked or the 'blue' air filter is blocked.	• If the purge pipe is too short, it may kink on its radius and block the air supply into the ink monoblock (see *Figure 8-11 on page 8-34*). The pipe should be replaced with a longer section if this has happened. • If the blue air filter is blocked it has the same effect and should be replaced ***Note:*** *When replacing the blue filter, DO NOT remove the fitting into the ink monoblock, as small components inside may be lost. Disconnect the filter at the knurled connection only, as shown in Figure 8-11 on page 8-34.*

Table 8-6: Causes and Solutions

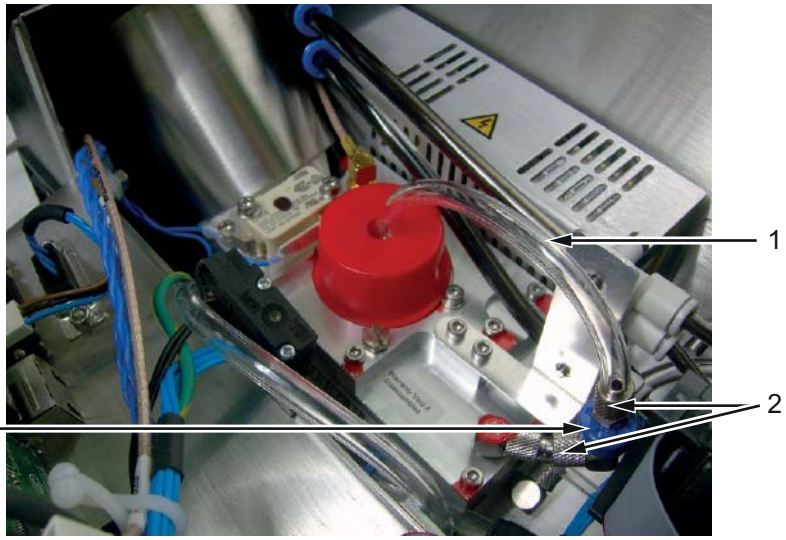

1. Purge Pipe
2. Knurled Connections
3. Blue Air Filter

Figure 8-11: Blue Air Filter

The Print Quality is Poor

The Videojet printers are capable of producing very high quality printing; however there are a number of scenarios where print quality can be compromised. These scenarios are described in the following sections:

The print condition, the causes and solutions are described in Table 8-7.

Print Condition	Causes	Solutions
The printed image appears blurred and small 'satellite' drops of ink can be seen around the printed characters.	• The box is too far away from the printhead. • Droplets of ink being fired are deviating away from their target causing a blurring of the image.	Guide the box closer to the printhead (ideally within 2-3mm).

Table 8-7: Poor Print Quality - Causes and Solutions

Print Condition	Causes	Solutions
Horizontal unprinted 'stripes' and misplaced lines of print appears on the print image. The Figure 8-12 shows an extreme example of blocked jets drop or de-primed jets. 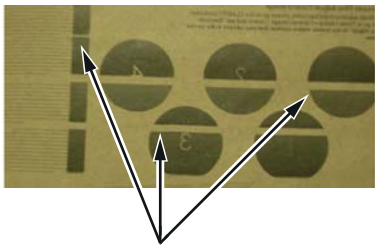 Blocked or De-Primed Jets *Figure 8-12: Blocked Jets*	• 'Jet Drop Out' is caused by cardboard debris blocking individual jets within the printhead or jets de-priming through air getting into the printhead. • Lines of print slightly in the wrong place are caused by partially blocked jets having their ink droplets deflected off-line by the debris.	• Make sure there is air connected to the printer and the air pressure is correct. • With no air or low pressure air, the micropurge cleaning will not be effective at reclaiming blocked/ de-primed jets. If the air is connected, but the environment is dusty, it may be necessary to increase the frequency of the auto-cleaning operation (if you are using an external product sensor). • The default setting is once every 10 prints and can be changed to a lower number by altering the parameter CleaningCycleEveryNPrints (a value of 1 means it cleans the head every time a box appears). • If the air is connected and you are running from an external product sensor, the sensor may be too close to the print array, not allowing enough time for the cleaning cycle to operate. In this scenario, the printhead will never be automatically cleaned. • Increase the distance between the sensor and printhead. The cleaning process needs a minimum time of around 0.4 seconds so, the print sensor must be moved to a corresponding distance upstream of the print array. • If the cleaning system has been inoperative for a long period of time, an accumulation of debris may have built up on the printhead nozzle plate. A macropurge may assist in its removal. Macropurge must be performed without the boxes passing in front of the printer

Table 8-7: Poor Print Quality - Causes and Solutions (Continued)

Print Condition	Causes	Solutions
		To macropurge: 1. Press the left hand ‘A’ button on the printer and hold it down for several seconds until the process starts - you can then release the button. 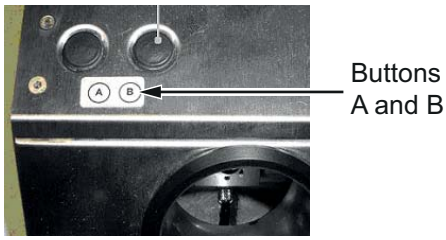 *Figure 8-13: Buttons A and B* 2. A large purge of ink is followed by a delay as the ink drains down into the ink collector. A long air blast cleans any remaining debris from the head. A printhead which has suffered mechanical damage, has been scratched, or where debris cannot be purged out of the jets, has been damaged permanently and the only solution to return all jets to a printing state is replacement of the printhead itself. The print face is very fragile and great care must be taken when working around it.

Table 8-7: Poor Print Quality - Causes and Solutions (Continued)

The Printer is Error Free but not Printing an Image - Batch Count not Incrementing

Cause	Solution
The printhead is disabled	Navigate to *Tools >Setup > Printhead*, and if necessary enable the printhead again. 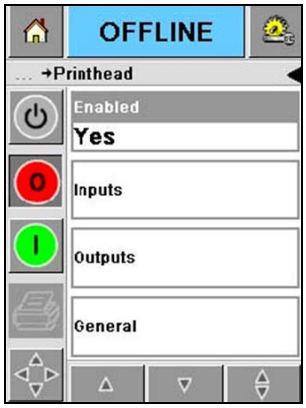
The printer is shutdown or off-line.	Press the 'Green' On - Line button. 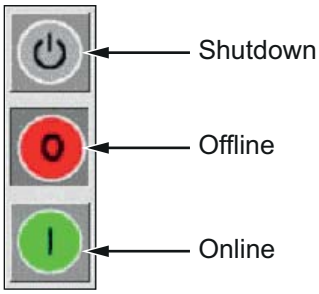
The product sensor is not detecting the product.	• Navigate to *Tools > Diagnostics > Printhead > Inputs,* and check whether the internal or external product sensor changes state when triggered. • If neither sensor triggers, check the sensor and the wiring loom. 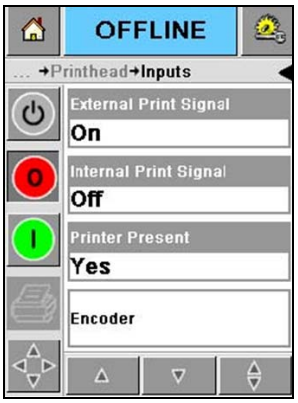 If all of the above appear to be correct, trigger the print sensor and watch the green LED on the front of the printer. It will flash rapidly when the printer is actually trying to jet. If it is not flashing, or flashes after a very long time, there may be an encoder, conveyor speed or registration problem.

Table 8-8: Printer is Error Free but not Printing - Batch Count not Incrementing

Cause	Solution
If running from an encoder and the encoder is slipping or the encoder wheel is not rotating, the various registration delays will never expire and the printer will never print.	Navigate to *Tools* > *Diagnostics* > *Printhead* > *Inputs* and see that the encoder is registering a sensible, consistent line speed when rotating, as seen in the following figure. 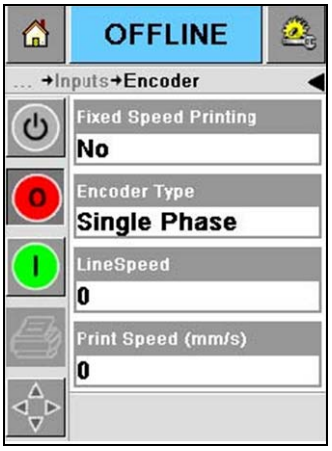
The 'PrintGating' mode may be enabled and the 'InternalPrintSignal' sensor may not be functioning correctly.	Check if the sensor is changing state by navigating to *Tools* > *Diagnostics* > *Printhead* > *Inputs.* It may be that the Gating sensor is not seeing the box and therefore preventing the printing operation.
The print image designed in CLARiSOFT may have a large empty border at the start or end of the actual print. This could be causing an excessive print registration and delaying the actual printing much later than is expected. The print may be occurring after the box has passed the printer.	Check if LED on the printer flashes to indicate that the printing is taking place, after the box has passed, and adjust Registration Delays to suit or remove excessive borders from image designs and re-download into the printer.
If this fault persists, you may have a faulty control PCB, a faulty printhead or an internal cabling problem.	Check all cables connections and replace the PCB or the printhead, if necessary.
If there is no 'Job' selected, the unit will not print.	Ensure that a valid job is selected and try again.
Encoder is set to Quadrature & conveyor is travelling backwards	Navigate to *Tools* > *Setup.* Check *Setup* parameters

Table 8-8: Printer is Error Free but not Printing - Batch Count not Incrementing (Continued)

The Printer is Error Free but not Printing an Image - Batch Count is Incrementing

Condition	Solution
Blank sub-image is loaded	On the CLARiTY home screen, press the name of the currently loaded job and ensure that it is not blank. If blank, printhead assignment/sub-image settings must be corrected in CLARiSOFT and the job re-downloaded to the printer.
Printer has de-primed	While visually monitoring the front of printhead, perform a micro purge and determine if ink is being purged evenly from all nozzles. If no/little ink is being purged, then re-prime the printer. Navigate to *Tools* > *Setup* > *Consumables* > *Prime Printhead*. Refer “Videojet 2300 Priming Procedures” on page 5-4.
Printhead filter is blocked (Videojet 2351 and 2361 only)	1. Disconnect the ink supply tube from the inlet side of the printhead filter and using a spare piece of tubing, extend the ink supply tube so that it reaches outside of the printer. Direct the tube into a suitable waste container and perform a series of 10 micro purges. 2. If ink is expelled from tubing when purged, the printhead filter is clogged and should be replaced. **Caution**: Replace the printhead filter in an environment free of dust and debris, as any contamination of the ink line tubing between the outlet of the filter and the inlet of the printhead could lead to deteriorated print quality from clogged nozzles. 3. To replace, disconnect the 90 degree fitting from the printhead on the outlet side of the filter and install the replacement filter assembly, ensuring the side of the filter marked with “OUT” is facing the printhead. 4. Re-prime the printhead. Navigate to *Tools* > *Setup* > *Consumables* > *Prime Printhead*. Refer “Videojet 2300 Priming Procedures” on page 5-4. 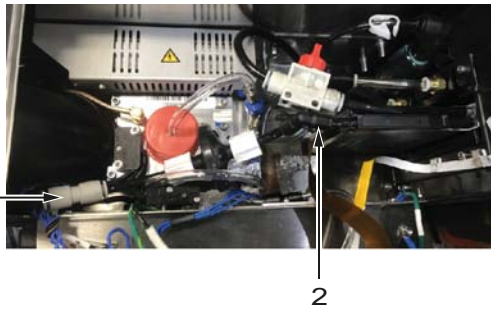 **1. Ink Supply Tubing** **2. 90 Degree Fitting**

Table 8-9: Printer is Error Free but not Printing - Batch Count Incrementing

The Touchscreen Does Not React When Touched

Condition	Solution
If the touchscreen does not react to touch, or it is difficult to 'hit' the right button	Re-calibrate the touchscreen. Do the following tasks to recalibrate: 1. Navigate to *Tools* > *Set* > *Control* and select *Recalibrate Touchscreen*. 2. If it is not possible to trigger the recalibration from this screen, connect a PC running CLARiTY Configuration Manager and trigger the 'Touchscreen Calibration Event', found in the 'CLARiTY' folder. 3. If the problem persists, check the internal touchscreen connections and if necessary replace the touchscreen/ LCD assembly.

Table 8-10: The Touchscreen Does Not React When Touched

The Printer Reports Ink Level Sensor Errors

Cause	Solution
If the ink level sensor fails, CLARiTY will report an Ink Sensor Error fault	Replace the monoblock.
The monitoring circuit on the main PCB is defective	Replace the main PCB
The readings from the sensor are unreliable	Monitor the live sensor readings in the diagnostics screen. 1. Navigate to *Tools* > *Diagnostics* > *Consumables.* 2.The reading will fluctuate slightly in normal conditions. If the readings are randomly changing over a large range, the monoblock should be replaced and then finally the main PCB if the problem persists.

Table 8-11: The Printer Reports Ink Level Sensor Errors

Ink is Seeping Over The Printhead Front Plate or Knife Edge

Ink should not contaminate the metalwork surrounding the printhead nozzle plate or the inside of the printer.

All purged ink should be captured in the ink drain channel and routed internally through the ink reclaim circuit and not migrate elsewhere. If ink migration is present, there are several possible reasons.

Cause	Solution
Cardboard or dust debris is bridging the gap between the printhead nozzle plate and the printhead front plate. Purged ink tends to track across this debris and once onto the outside edge of the knife edge, will freely spread everywhere.	Periodically clean the knife edge and printhead front plate to prevent the build up of these bridges. Perform this as often as necessary.
The air pressure being too high will result in purge ink being sprayed rather than directed towards the ink drain channel. Evidence of ink will also probably be seen on the surrounding conveyor and floor.	Check and if necessary, reset the air pressure.
If the air pressure is too low a longer micropurge and an excess of ink will be forced onto the printhead nozzle plate. The smaller air blast may not adequately clear this ink away, leaving ink covering the jet array and resulting in poor print towards the bottom of the jet array where ink will collect.	Check and if necessary, reset the air pressure.
The blow nozzle plate may have been bent or damaged. This will cause distortion of the flow of the cleaning air.	Repair or replace the nozzle plate if damage is visible.
There may be ink underneath the blow nozzle plate - perhaps left there from the priming operation.	Remove the plate, check and clean.

Table 8-12: Ink is Seeping Over The Printhead Front Plate or Knife Edge

Cause	Solution
Ink is overflowing from the ink collector at the base of the printhead.	• The debris pad requires replacement. • Check the ink collector it is not blocked or filled with cardboard debris. • The reclaim pump filter may be blocked and require replacement. • If the ink collector is free of debris but full of ink, replace the filter. ***Note:*** *The ink return gutter can overflow back inside the printer and this must be checked and cleaned if necessary.*
Excessive ink contamination may also be caused by false triggering of the print sensor, resulting in ink being jetted into the air.	Check the function of the sensor - ensure it is not being triggered by erratic box movement or reflective print or markings on the box. Use the Print Gating function to help eliminate this problem.

Table 8-12: Ink is Seeping Over The Printhead Front Plate or Knife Edge (Continued)

Note: *Prints Per Cleaning set to a low value (for example - 1) will not cause a leak, but will require 10X the amount of ink handling compared to using a default Prints per Cleaning value of 10. If a leak develop with the Prints Per Cleaning set to 1, as opposed to 10, there will be 10X the amount of leaking.*

Caution

Videojet strongly recommends using the default setting of 10 Prints per Cleaning.

Ink Leak Issues

Condition	Cause	Solution
Ink collector cup is overflowing	Obstruction in the reclaim path, vacuum leak in the reclaim path, clogged reclaim filter or lack of vacuum generated by the monoblock	Use the monoblock vacuum test procedure. For details, refer to “Monoblock Vacuum Test Procedure” on page 8-45”.
Ink not correctly directed to the collector cup. This is considered a bridging/splattering issue.	**Bridging issue:** In a bridging issue, ink does not flood over the collector cup. Instead the purged ink finds a bridge, usually created by debris over the drain channel and eventually leaks from an external surface of the printer.	1. Clean the drain channel and external surface areas around the printhead. 2. Inspect the air knife plate and gasket. The plate should be flat with no damage or heavy scratches to interfere with the air stream.
	Splattering issue: Splattering is when the air blast stream blows ink across and off the front of the printer. To test for splattering, during a micropurge, hold a piece of paper against the side of the printer opposite to the air knife. No ink should splatter onto the paper. Often splattering happens as a result of bridging.	1. Clean the drain channel and external surface areas around the printhead. 2. Inspect the air knife plate and gasket. The plate should be flat with no damage or heavy scratches to interfere with the air stream. 3. Make sure the air regulator pressure is set to the correct value.

Table 8-13: Ink Leaking Issue

Monoblock Vacuum Test Procedure

Perform this procedure if you suspect the monoblock is faulty. Low or no reclaim vacuum are symptoms of a faulty monoblock. To test the monoblock vacuum:

***Note**: Cleaning kit (part number 36481) is needed for the monoblock vacuum test procedure.*

1. Remove the plunger from a syringe and connect the syringe to the inlet (top) of the reclaim filter.
2. Add 10 ml to 20 ml of ink to the syringe.
3. Press and release the *A Button* on the printer to initiate a micropurge.
4. After each purge/cleaning cycle, the printer will reclaim approximately 3 to 5 ml of ink.
5. If the printer is not reclaiming ink there could be a vacuum leak in a tubing connection or in the reclaim filter.

   Bypass the reclaim filter by connecting the syringe directly to the tubing from the monoblock and test again.
6. Perform the following solutions for the test results:

Test Results and Solutions

Result	Solution
Monoblock reclaims ink through the reclaim filter when tested but printer does not reclaim ink.	Flush out reclaim tubing and collector cup. For more details, refer to Service Manual.
Monoblock only reclaims ink when syringe is connected directly to monoblock (bypassing reclaim filter).	Check for vacuum leaks in tubing connections or reclaim filter, replace reclaim filter if necessary.
Monoblock does not reclaim ink when syringe is connected directly to monob-lock.	Replace monoblock.
Purging excess ink on autopurge cycle.	Visually inspect the array to compare the amount of ink purged in a suspect printer as against the amount of ink purged out in a known good printer. Replace any monoblock that expel excess amount of ink during an autopurge cycle.

Table 8-14: Monoblock Vacuum Test - Result and Solutions

Caution

The monoblock is a non-serviceable item. Disassembling a monoblock will void its warranty.

Poor Quality or Missing Print at the Bottom of the Printed Image

Cause	Solution
This is usually caused by the jets at the bottom of the printhead being blocked either by cardboard debris on the printhead nozzle plate, or by ink that has not been cleared away correctly after a cleaning cycle and has drained down to the lowest point of the printhead, covering the jets. If the air pressure is too low, a longer micropurge will occur and excessive ink will be forced on the printhead nozzle plate. The smaller air blast may not adequately clear the residual ink away, leaving ink covering the bottom of the jet array and resulting in poor print towards the bottom of the printed image.	Clean cardboard debris from the printhead nozzle plate area. Check and reset the air pressure if necessary.

Table 8-15: Poor Quality or Missing Print at the Bottom of the Printed Image

Print is Missing From the Top of the Printed Image

Printer	Print Loss
Videojet 2351/2361	The Videojet 2351/2361 is a single array and the print loss will be a gradient which will be poor at the top of the printhead as it is furthest from the ink supply.
Videojet 2340	The Videojet 2340 is a single array and the print loss will be a gradient which will be poor at the top of the printhead as it is furthest from the ink supply.

Table 8-16: Print Loss

Cause	Solution
The most common reason for this fault is either a bad prime or shortage of ink causing the uppermost jets to 'de-prime' first (if printing is continued, eventually all jets will de-prime).	Under normal operation, the printer will not run dry and will shut down with a request for ink before the jets de-prime. However, if the printer has ink: First attempt a macropurge and see if ink is coming out of all the jets in the array - if no ink is present, this is a good indicator of jet de-prime and loss of ink supply.
If the macropurge corrects the print then the problem may have been excessive debris on the jet array.	Check and clean away and cardboard debris.
If the machine is not indicating that it is out of ink it may have been primed incorrectly, resulting in residual air in the head causing the de-priming of jets.	Repeat the priming procedure.
If the machine is not indicating it is out of ink and a re-prime has not fixed the problem then it is most likely that there is an air leak in the ink system causing the ingestion of air which will de-prime the jets when the air reaches the jet array.	The location of the air leak must be determined. Do the following tasks: 1. Check all ink pipe fittings inside the printer to check that none are obviously leaking. 2. There may be an air leak within the ink shut-off valve. Replacement of the ink shut off valve is recommended in the event that no other fittings appear to be leaking. The location of the ink shut off valve is shown in Figure 8-14 on page 8-47.

Table 8-17: Print is Missing From the Top of the Printed Image

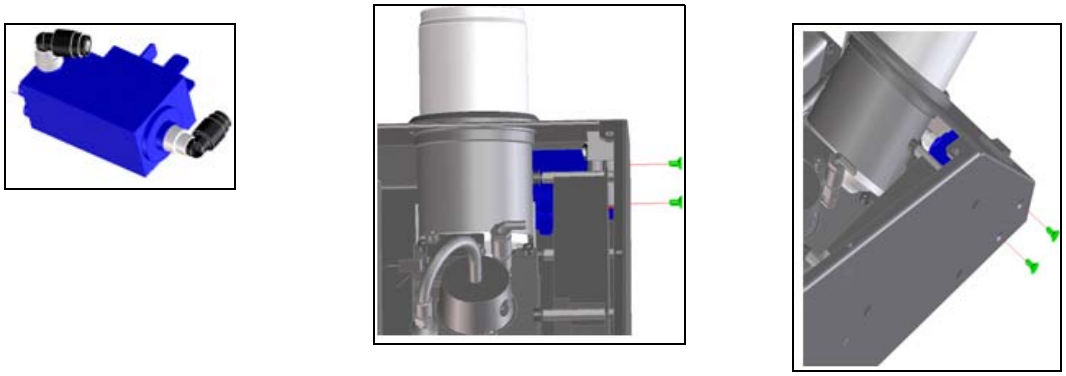

Figure 8-14: Ink Shut-off Valve

The LCD Does not Power Up

Figure 8-15: Fuse

Condition	Solution
The LCD does not power up	Check the LED on the front of the machine. If the LED does not illuminate when the printer is turned on, check the mains supply and the fuse in the printer. The fuse is located next to the power entry socket as shown in Figure 8-15.
If the LED illuminates, the problem could be with the LCD.	Check all the internal connections between the PCB and LCD and then exchange the LCD assembly if necessary.
If there is power to the printer and the fuse is OK, the problem could be with the power supply unit or the PCB.	Check the main power points between the PSU and the PCB using the electrical schematics later in this guide and exchange the PSU or the PCB as appropriate.

Table 8-18: The LCD Does not Power Up

The Back Light is On But LCD Image is Not Displayed

Cause	Solution
The unit is in Power Save Mode	Touch the LCD screen and re-activate the unit.
The ribbon cable between the LCD and connector X27 may have been incorrectly fitted.	Check that the cable has not been rotated (twisted) by 180 degrees and is correctly located at X27 on the main PCB assembly (see Figure 8-16).

Table 8-19: The Back Light is On But LCD Image is Not Displayed

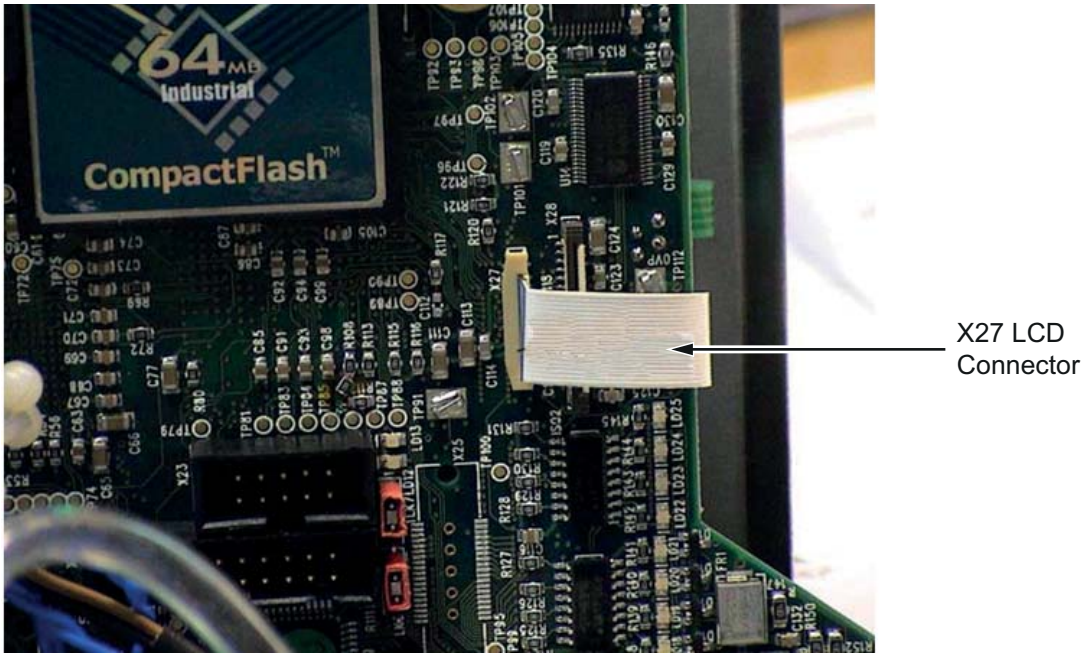

Figure 8-16: X27 LCD Connector

CLARiTY Reports 'The Battery is Flat'

The battery has a very long life (approximately 5 years). If the printer is to be stored for a long period of time, it is recommended to disconnect the battery by removing link 5.

Link 5 disables the battery and in normal use should be set as shown in Figure 8-17.

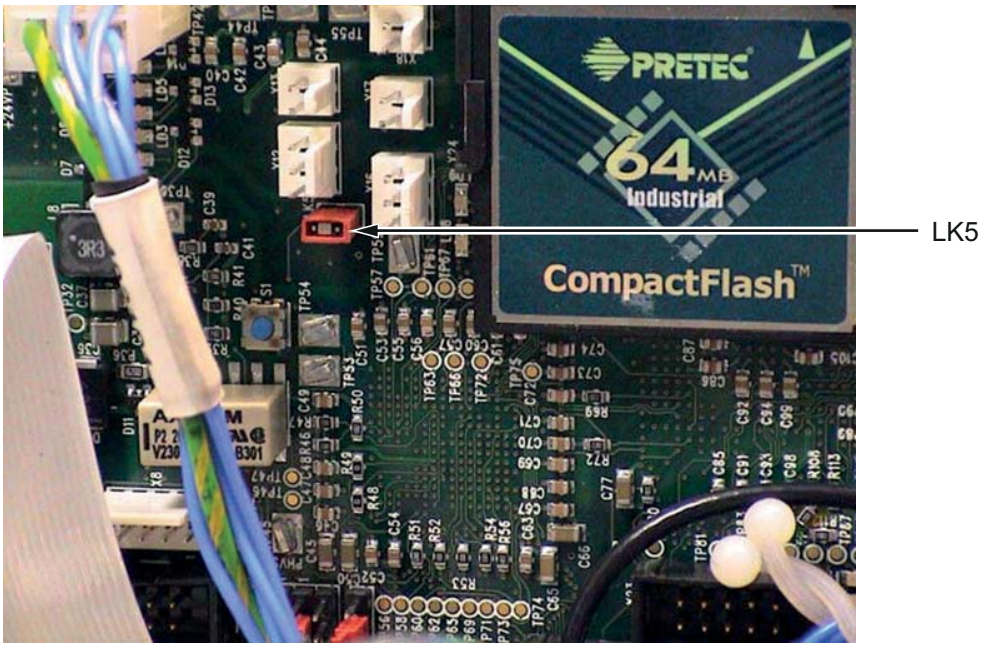

Figure 8-17: LK5 for Normal Operation

The CLARiTY Screen of a Videojet Printer Reports 'Set Printhead Code'

The printer type has been set incorrectly on the Main PCB.

Check the switch settings for the main PCB. Refer to Replacement Instructions, Service Manual for switch settings.

In case of Videojet 2340 printer, it could be because of the printhead code has not been set correctly. Set the printhead code in CLARiTY Configuration Manager.

Illustrated Parts List

9

This chapter contains the illustrated parts breakdown and spare parts list of the Videojet 2300 series printers:

Description	Part Number	Refer to
Videojet 2340/51/61 Air Valve Assembly	404299	“Air Valve Assembly” on page 9-4
Videojet 2340 Reservoir Air Filter Assembly	402321	“Reservoir Air Filter Assembly” on page 9-5
Videojet 2351/61 Reservoir Air Filter Assembly	402286	“Reservoir Air Filter Assembly” on page 9-5
Videojet 2340/51/61 Can Present Microswitch Assembly	402253	“Can Present Microswitch Assembly” on page 9-6
Videojet 2340 Ink Shut Off Valve Assembly	404297	“Ink Shut Off Valve Assembly” on page 9-7
Videojet 2351/61 Ink Shut Off Valve Assembly	36480	“Ink Shut Off Valve Assembly” on page 9-7
Videojet 2340/51/61 Standard LCD Assembly with Touchscreen	404292	“Standard LCD Display and Touchscreen” on page 9-8
Videojet 2340/51/61 Integral Product Sensor	402266	“Integral Product Sensor” on page 9-9
Videojet 2340/51/61 Ink Reclaim Filter Assembly	402249	“Ink Reclaim Filter Assembly” on page 9-10
Videojet 2340/51/61 Vent Cap Assembly	402250	“Vent Cap Assembly” on page 9-11
Spare Videojet 2361 Nozzle Plate Seal (pack of 10)	403461	-

Table 9-1: Quick Reference Guide

Description	Part Number	Refer to
Spare Videojet 2340 Printhead Cable	402237	-
Spare Integral Sensor Cable	402367	-
Main Controller PCB	402258	“Main Controller PCB” on page 9-12
Videojet 2361 ICM PCBA	36478	-
Videojet 2351 ICM PCBA	36479	-
Printhead to ICM Cable (150mm)	36604	-
Videojet 2340/51/61 Power Supply	404294	“Power Supply” on page 9-13
Videojet 2340 Power Switch	402254	“Power Switch” on page 9-14
Spare Flash Card	402203	“Spare Flash Card” on page 9-14
Videojet 2340/51/61 Air Regulator Filters	402515	“Air Regulator Filters” on page 9-15
Videojet 2340 Vent Fitting, 5 Off	402596	“Vent Fitting” on page 9-15
Videojet 2351/61 Vent Fitting, 5 Off	402595	“Vent Fitting” on page 9-15
Videojet 2340 Spare Printhead Assembly, 17 mm	402287	-
Videojet 2351 Spare Printhead Assembly, 50 mm	36485	-
Videojet 2361 Spare Printhead Assembly, 70 mm	36486	-
Videojet 2340 Monoblock	403456	-
Videojet 2351/61 Monoblock	36482	-
Videojet 2351/61 Shipping/Priming Cap Assembly	36445	-

Table 9-1: Quick Reference Guide (Continued)

Description	Part Number	Refer to
Videojet 2340 Shipping and Front End Kit	405023	-
Air Regulator	403401	-
Videojet 2351 Front Enclosure	404300	-
Videojet 2361 Front Enclosure	404301	-
Maintenance Kit, Videojet 2340	404427	“Air Regulator Filters” on page 9-15, reclaim filter, “Reservoir Air Filter Assembly” on page 9-5
Maintenance Kit, Videojet 2351/61	404428	“Air Regulator Filters” on page 9-15, reclaim filter, “Reservoir Air Filter Assembly” on page 9-5
Videojet 2351/61 Kit, Reclaim Valve/Tubing	36431	-
Spare, Filter Assembly In-line, Ink	36601	-
Remote User Interface (RUI) Spares		
RUI Assembly	404147	-
Spare 6.5 CLARiTY LCD	404326	-
Spare 6.5 CLARiTY Inverter	404327	-
Spare 6.5 CLARiTY PCB	404328	-
Spare RUI Connection Cable - 1m	404302	-
Spare RUI Connection Cable - 3m	404303	-
RUI Internal Printer Cable	404189	-

Table 9-1: Quick Reference Guide (Continued)

Air Valve Assembly

Part Number - 404299

Figure 9-1: Air Valve Assembly

Reservoir Air Filter Assembly

Part Numbers for Videojet 2340/2351/2361

Part Number	Printer
402321	Videojet 2340
402286	Videojet 2351/2361

Table 9-2: Reservoir Air Filter Assembly

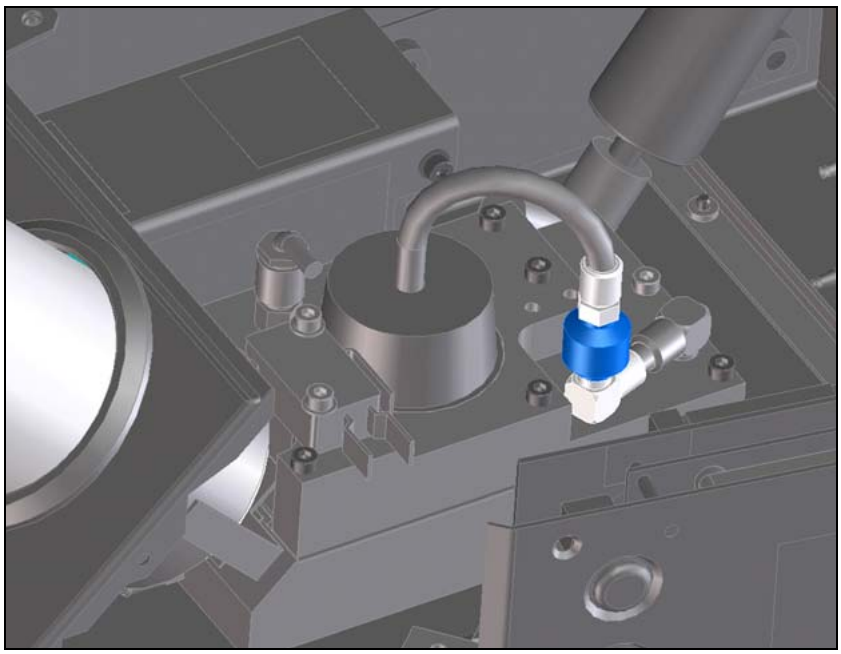

Figure 9-2: Reservoir Air Filter Assembly

Figure 9-3: Reservoir Air Filter Assembly

Can Present Microswitch Assembly

Part Number - 402253

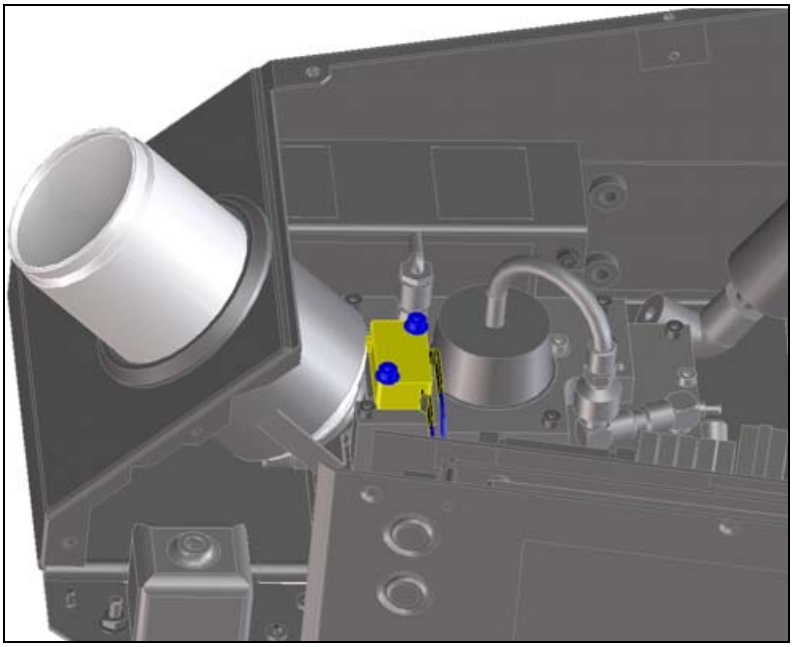

Figure 9-4: Can Present Microswitch

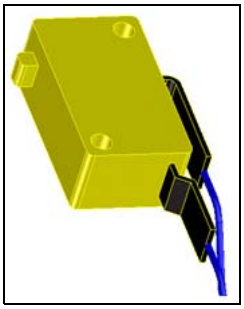

Figure 9-5: Can Present Microswitch Assembly

Ink Shut Off Valve Assembly

Part Numbers for Videojet 2340/2351/2361

Part Number	Printer
404297	Videojet 2340
36480	Videojet 2351/Videojet 2361

Table 9-3: Ink Shut Off Valve Assembly

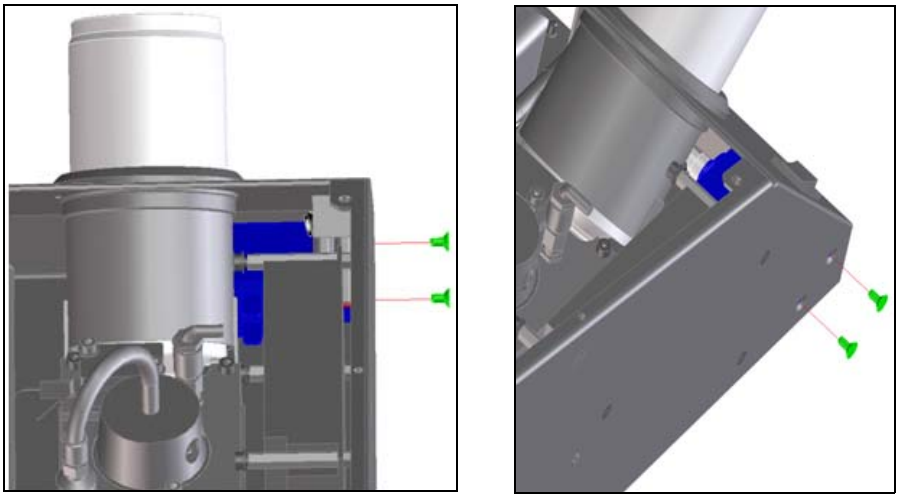

Figure 9-6: Ink Shut Off Valve Assembly

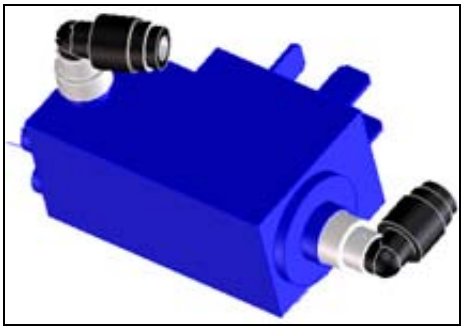

Figure 9-7: Ink Shut Off Valve Assembly

Standard LCD Display and Touchscreen

Part Number - 404292

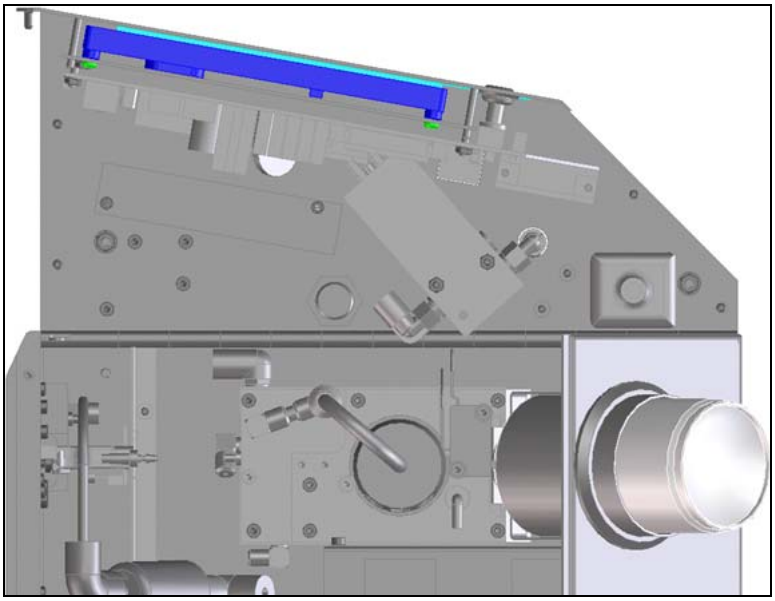

Figure 9-8: Standard LCD Display and Touchscreen

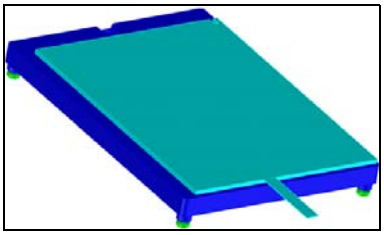

Figure 9-9: Standard LCD Display and Touchscreen

Integral Product Sensor

Part Number - 402266

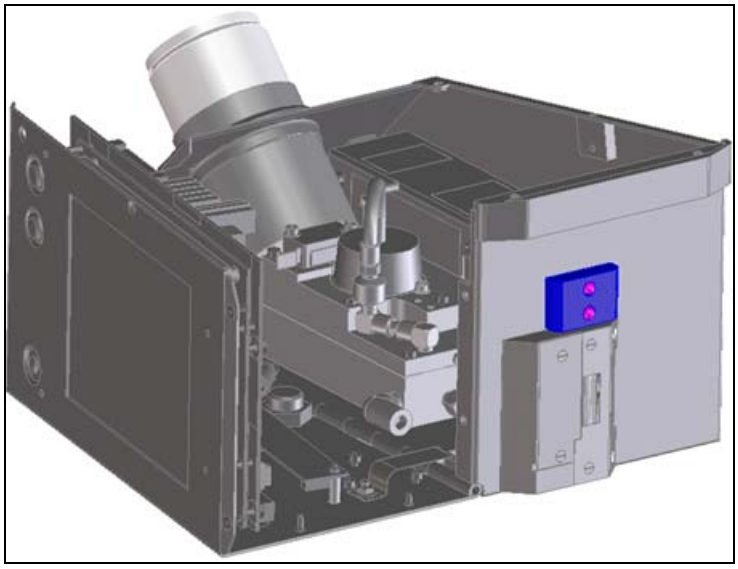

Figure 9-10: Integral Product Sensor

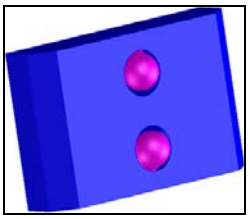

Figure 9-11: Integral Product Sensor1

Ink Reclaim Filter Assembly

Part Number - 402249

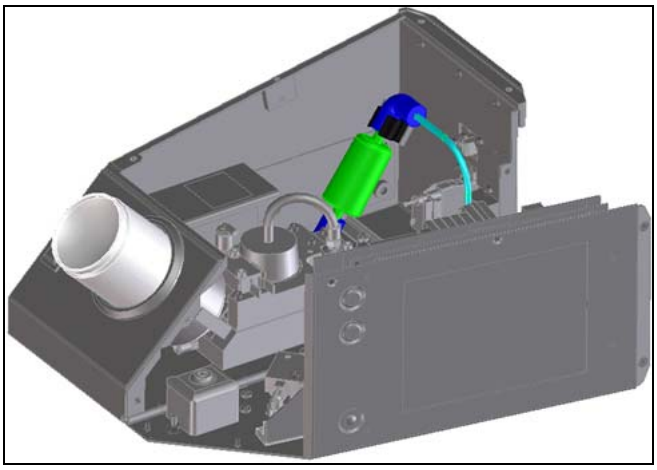

Figure 9-12: Ink Reclaim Filter Assembly

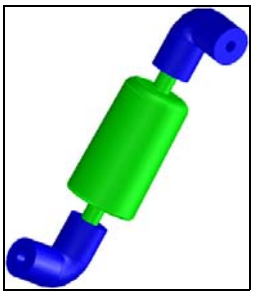

Figure 9-13: Ink Reclaim Filter Assembly

Vent Cap Assembly

Part Number - 402250

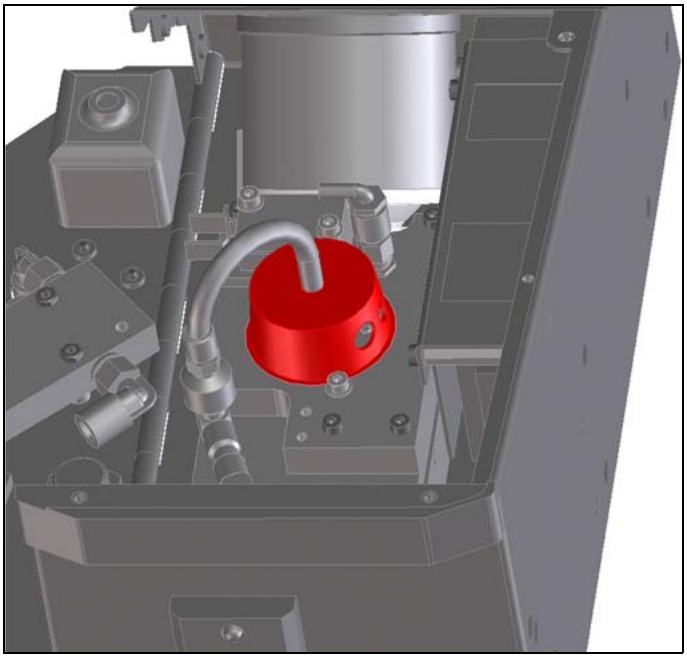

Figure 9-14: Vent Cap Assembly

Figure 9-15: Vent Cap

Main Controller PCB

Part Number - 402258

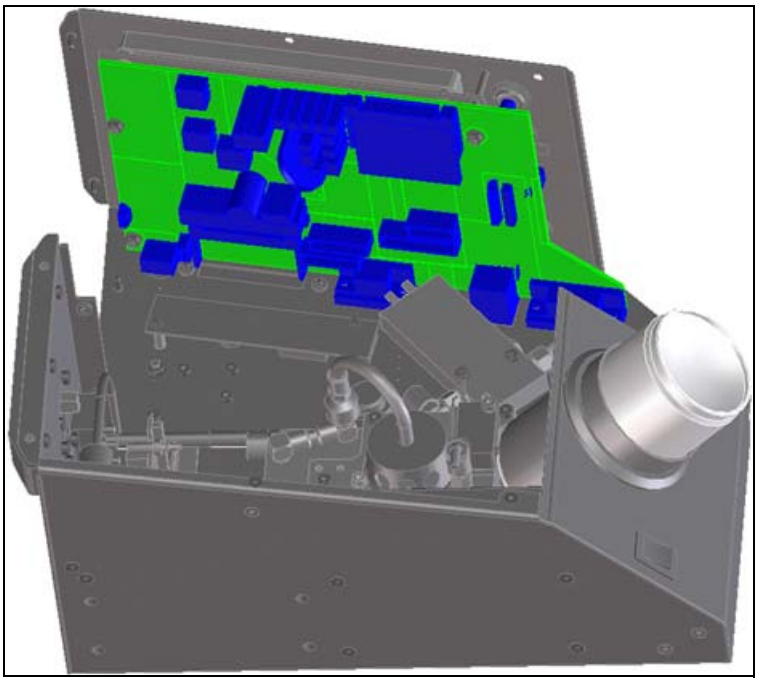

Figure 9-16: Main Controller PCB

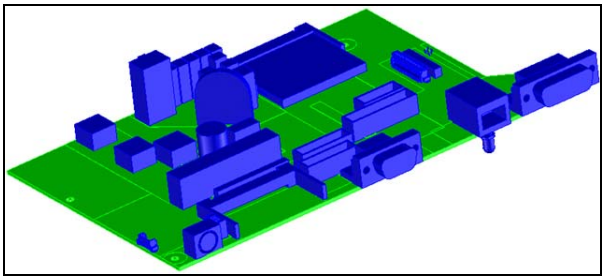

Figure 9-17: Main Controller PCB

Power Supply

Part Number - 404294

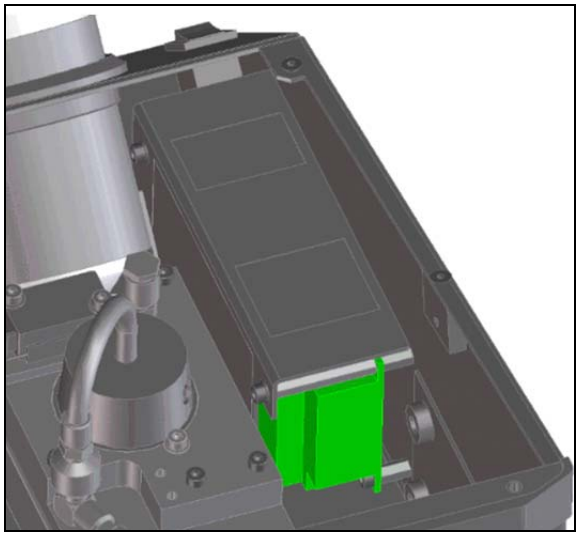

Figure 9-18: Power Supply

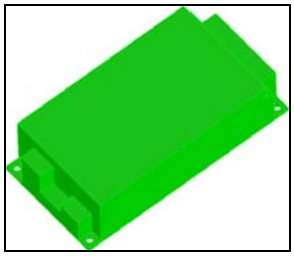

Figure 9-19: Power Supply 1

Power Switch

Part Number - 402254

Figure 9-20: Power Switch - 2340

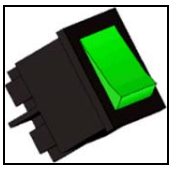

Figure 9-21: Power Switch - 2340

Spare Flash Card

Part Number - 402203

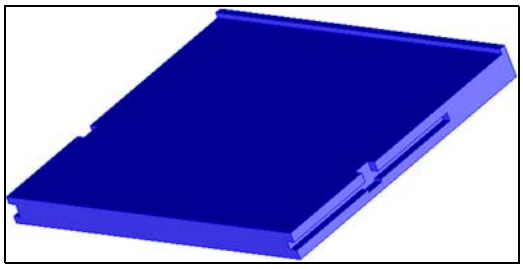

Figure 9-22: Spare Flash Card

Air Regulator Filters

Part Number - 402515

Figure 9-23: Air Regulator Filters

Vent Fitting

Part Numbers for Videojet 2340/2351/2361

Part Number	Printer
402596	Videojet 2340
402595	Videojet 2351/2361

Table 9-4: Vent Fitting

Figure 9-24: Vent Fitting

Videojet 2300 Series Printer Part Numbers

Part Number	Description
404191	Videojet 2340 Printer
36414	Videojet 2351 Printer
36543	Videojet 2351 Slave Printer
36415	Videojet 2361 Printer
36544	Videojet 2361 Slave Printer
404429-xx	Language Kit, Videojet 2340/51/61*

Table 9-5: Printers

Note: *Language kit is sold only with the new printer. Contact your local Videojet sales engineer for language specific kit P/N, when purchasing a new printer.*

Accessories

Part Number	Description
404459	Alarm Beacon Assembly (with cable)
34593	Alarm Beacon Assembly (without cable)
MS1217-G	Green Light Module for Alarm Beacon
MS1217-Y	Yellow Light Module for Alarm Beacon
MS1217-R	Red Light Module for Alarm Beacon
MS1410	USB Memory Stick (CLARiTY Compatible)
MS0965-14	Hand-held Recall Scanner, Videojet 2340/51/61
400720	CLARiTY PC/Null Modem Serial Cable
395005	Conveyor Mounting Bracket, Videojet 2340/51/61
405130	Flex Stand Printhead Bracket
402091	Ethernet Patch Cable (for use with Connection Box)

Table 9-6: Accessories

Part Number	Description
402092	Two Printer Connection Ethernet Cable (crossover)
402274	15 way I/O Cable
402681	2 Unit Connection Box, Videojet 2340/51/61
402682	3-4 Unit Connection Box, Videojet 2340/51/61
402276	Product Sensor - Diffused (cable included), Videojet 2340/51/61
402277	Product Sensor - Retro Reflective (cable included), Videojet 2340/51/61
402275	Encoder Kit (includes encoder, cable, wheel and mounting bracket), Videojet 2340/51/61
MS1909	Optional Heavy Duty Encoder (includes encoder, cable, wheel and mounting bracket)
702412	Empty Ink Cannister (for draining/ storage)
402291	Spare Assembly Encoder, Videojet 2340/51/61(Encoder only)
402714	Spare Encoder, Wheels (5 Off), Videojet 2340/51/61
402252	Spare Fuse Kit, Videojet 2340/51/61
405003	Packaging, Shipping (Videojet 2340)
405001	Packaging, Shipping (Videojet 2351/61)
405217	Swing Arm, Videojet 2351/61
MS1658	Plexiglass Touchscreen Cover, Videojet 2340/51/61
Swing Arm Spares	
404424	Swing Arm Guard Plate, Videojet 2351/61
404425	Swing Arm Spring Assembly, Videojet 2351/61
404426	Swing Arm Spring Kit, Videojet 2351/61

Table 9-6: Accessories (Continued)

Kits

Tubing Kit

Part Number	Description	Quantity
405005	Tubing Polyurethane 6 OD x 4 ID	6 ft
	Tubing Polyurethane 4 OD x 2.5 ID	4 ft
	Tube Fitting Union "Y" 4 OD x 6 OD	2
	Tube Fitting Union "Y" 6 OD	2
	Absorbent Pad	1

Table 9-7: Tubing Kit

Hardware Kit

Part Number	Description	Quantity
405004	Tube Fitting Plug M5	1
	M3 x 8 Torx Countersunk Screw	2
	M3 Shake-proof Washer	2
	M3 x 6 Slotted Head Countersunk	20
	M3 x 6 Socket Head Capscrew	4
	M5 Nylon Gasket	1
	Ink Shut-off Valve Thumbscrew	1
	Nozzle Front Plate (70 mm)	1
	Thumb Screws	10

Table 9-8: Hardware Kit

Swab Cleaning Kit

Part Number	Description	Quantity
405006	Large Polyester Swabs	50
	Small Foam Swabs	150

Table 9-9: Swab Cleaning Kit

Cleaning Kit

Part Number	Description
402280	Cleaning Kit, Videojet 2340
36481	Cleaning Kit, Videojet 2351/61
36466	Debris Collector Pad, Drain, Ink Return (6 off)

Table 9-10: Cleaning Kit

Frequently Asked Questions

A

How Does the Ink Delivery System Work?

The ink delivery system of the printer is total dependent upon the air system in order to function correctly.

Figure A-1 and Figure A-2 on page A-2 are schematics of the ink/air system for the Videojet 2340, 2351 and Videojet 2361.

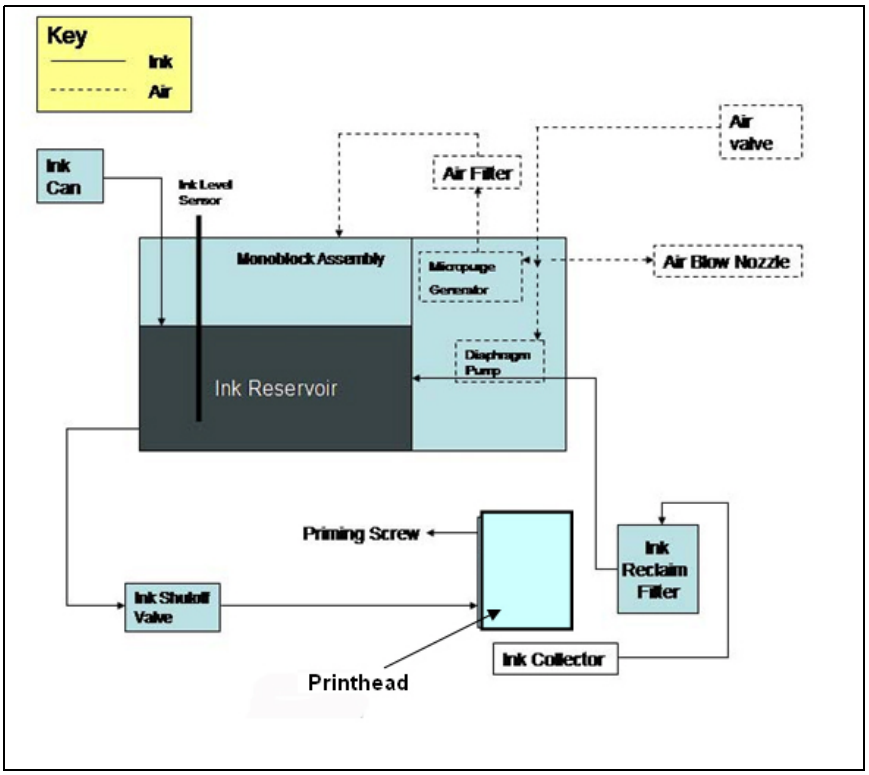

Figure A-1: Videojet 2340 and 2351 Schematic

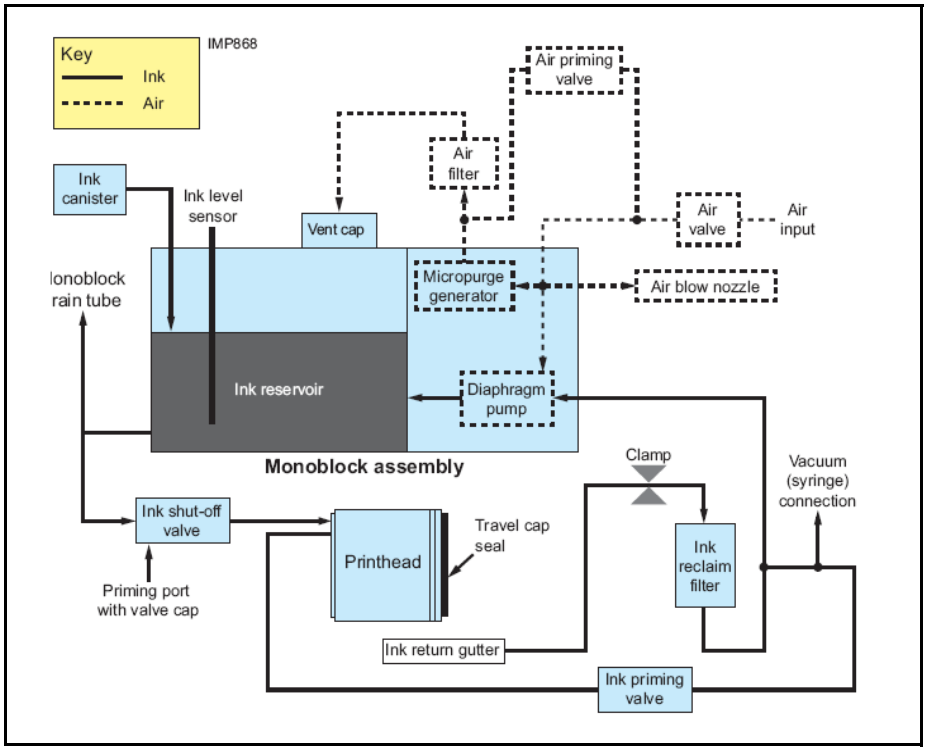

Figure A-2: Videojet 2361 Schematic

The monoblock assembly is the hub of the ink supply system.

Air which is delivered as part of the micropurge sequence is split within the monoblock to perform several functions:

- Some is diverted directly to the air blow nozzle which blows air across the printhead nozzle plate to remove cardboard debris and keep the printhead clean.
- Some is used by the micropurge generator to create a short duration pressure pulse. Air which is delivered into the ink reservoir momentarily pressurises the ink and creates a micropurge of ink from the jets.
- Some is directed to drive a diaphragm pump which is used to pump the ink from the ink collector, through the reclaim filter and back into the ink reservoir.

Ink is delivered from the can to the ink reservoir on a bird feeder principle, operating as follows:

- The delivery tube between the can at the reservoir stops at the reservoir full point.
- The delivery tube between the can and the reservoir is too narrow for ink to freely flow. Unaided, the ink remains in the can.

- When the ink level in the reservoir falls below the bottom of the ink delivery tube from the can, the pressurisation of the air above the ink reservoir, caused by the micropurge, makes small air bubbles travel up the ink delivery pipe and into the ink can.
- As the pressure in the air space at the top of the can increases, ink is forced down the ink delivery pipe into the reservoir within the monoblock.
- Videojet 2361 has two additional valves - ink priming valve and the air priming valve to improve the priming process.

What Does the Ink Shut Off Valve Do?

The ink shut off valve operates during the following sequences:

- During priming (on the Videojet 2351 and Videojet 2361 only)
- Ink reservoir replenishment in high speed applications or when the printer is off-line

In its normal position the flow of ink is from the ink reservoir to the printhead and it has no effect on the supply of ink to the head.

Videojet 2351 and Videojet 2361

During the priming procedure for Videojet 2351/61, the ink shut off valve is closed. This allows monoblock diaphragm pump to generate a vacuum to assist in the priming process. Once priming begins, the valve is opened.

Videojet 2340, Videojet 2351 and Videojet 2361

The ink shut-off valve enables the ink supply to the head to be isolated from the ink reservoir in order that a filling cycle can be conducted without purging ink from the head.

If the valve fails or leaks, the result will be de-prime of the printhead because of ink starvation or ingestion of air into the ink supply.

When I Replace the PCB or Flashcard, How Do I Restore The Original Parameters?

The parameters of operation of the Videojet, which are set via CLARiTY Configuration Manager, are stored on the PCB flashcard.

Before changing the PCB or flashcard, the parameter set must be archived using CLARiTY Configuration Manager, as described earlier in this guide, and then restored when the new PCB or flashcard is fitted.

These parameters and printer settings can also be saved into a USB device by printer cloning method and then restored. Refer “How to Clone the Printers” on page A-4.

There are a few critical parameters which will be lost during this process, they are as follows:

- The current selected Job name and counter details will be lost and cannot be restored.
- The IP address will be lost. It must be re-entered using CLARiTY Configuration Manger.
- The Videojet 2340 printhead efficiency parameter will be lost and must be re-entered at the CLARiTY panel by navigating to *Tools* > *Setup* > *Printhead Code*. The code required can be found on the printhead.
- The ink full calibration level will be lost and must be re-calibrated from CLARiTY.
- Ensure an ink bottle is inserted and navigate to *Tools* > *Setup* > *Consumables*. Press the button *Calibrate Ink Sensor* and follow the on screen instructions.
- The touch screen calibration is stored on the PCB so if the PCB is replaced the PCB will need to be re-calibrated for the unit's screen. Go to *Tools* > *Setup* > *Control* > *Touch Screen Calibration*.

How to Clone the Printers

Printer cloning feature supports backing up of complete printer settings and job database from a printer and restoring them to another printer through a USB device.

Do the following tasks to clone the printer:

1. Insert a USB device to the required printer
2. In the User Interface, navigate to *Tools* > *Setup* > *Control*. A new option called *CLARiTY Printer Clones* appears.

3 Select *CLARiTY Printer Clones* and a list of all the clone files that are compatible with the printer appear.

   Note: *The printer clone file contains all the jobs, fonts and graphics in the current printer`s database along with all the configuration settings of the printer (including its IP Address).*

4 Create a clone of the printer jobs and settings.

5 Restore the clone to another printer. Restoring a clone file to the printer will create a exact replica of the printer that was cloned.

   Note: *All jobs and settings in the printer are deleted and replaced with new settings.*

A new parameter has been added to CLARiTY Configuration Manager in the System / USB folder called *PromptOnCLARiTYPrinterCloneDetect.* When set to *1:Yes*, a message prompt appears when a USB key is inserted with a compatible clone file asking whether the user wishes to install a compatible clone file. This parameter defaults to *0:No*.

Note: *While restoring, the IP address changes as per the printer that was cloned. Restoring more than one coder with an identical IP address will cause communication conflicts and communications to one or both of the coders will fail.*

Note: *Creating and restoring clones can take considerable periods of time depending on the number and nature of the jobs in the printer's database. If the jobs have large bitmaps, numerous different fonts or a large number of jobs will take time.*

How is the Ink Level in the Reservoir Calculated?

The ink level monitoring system relies upon a combination of calculated and measured values.

It is essential that this system is correctly understood.

Firstly, the ink level sensor system must be calibrated.

On manufacture of the PCB, the empty calibration level is stored in the PCB (it is a constant value and does not need entering once it has been set)

- When the printer ink reservoir has been filled with ink, a procedure can be run at the CLARiTY panel to calibrate the 'ink full' level on the sensor by navigating to *Tools* > *Setup* > *Consumables* and selecting the button *Calibrate Ink Sensor* and follow the on screen instructions.

These two calibration numbers define the measuring limits of the ink reservoir sensor i.e. full and empty.

They can be viewed on the CLARiTY screen *Tools* >*Diagnostics* > *Consumables*, as shown in Figure A-3.

Figure A-3: Consumables Screen

Note: *The value for empty is higher than the value for full. Thus, as the level of ink reduces in the tank, the live sensor level viewed on these screens will increase.*

This is counter-intuitive but is the correct function.

Whenever a canister of ink is added to a Videojet printer you must use the *Add Ink* function, see the Getting Started and User Guides, which can be found by pressing the Consumables Bar on the CLARiTY home screen, followed by the *Add Ink* function.

If this procedure is not followed, the ink level calculations will not work correctly, giving incorrect information.

When a new canister of ink is loaded that has not been in the printer before, a new FIN code must be entered. FIN codes can be found on the canister label. Once the code has been entered the printer assumes the canister is full and the ink level will read 100%.

Because the canister contents are not immediately emptied into the ink reservoir (see the earlier FAQ 1 on how the ink system works), there is no means of measuring the ink left in the system until the canister is completely empty.

Therefore, for the first 95% of ink used from a canister, the amount of ink left in the canister is theoretically calculated based upon the number of prints done and a knowledge of the actual information being printed (i.e. the printer counts the number of ink droplets jetted in each image and calculates ink consumption via the software).

Once the canister is completely empty, the only ink remaining in the printer is in the ink reservoir within the monoblock. As prints continue and ink is used, this level will now start to fall.

Once the ink level within the reservoir has dropped to 50% of the difference between the calibrated empty and full levels, the machine will attempt to replenish ink from the canister by a series of micropurges (if On-Line) or via an ink fill operation, using the ink shutoff valve, if in the Off-Line state.

If after 40 micropurges the ink level does not rise above the 50% of the difference between the calibrated empty and full levels, the printer will determine that the ink canister is empty and display the Yellow Warning bar for low ink, as seen below.

Figure A-4: Ink Low Warning

The machine now continues to calculate its theoretical ink consumption and will shut down with an Out of Ink error (see Figure A-5 on page A-8) once a further 5ml of ink has been used for printing.

Figure A-5: Out of Ink Fault

There is a failsafe which will cause the machine to shutdown when the measured ink level reaches a pre-determined low value.

This failsafe point is to stop the possibility of the printer de-priming the printhead due to air ingress. Until the new ink canister is added, this fault can not be cleared and the printer will cease to operate.

Note: *If an ink canister is removed from the printer before it has emptied, the unique bottle code will not be cancelled and will be remembered by the machine.*

Note: *If the same bottle is returned to the printer, the bottle code must be re-entered via the Add Ink function, its theoretically calculated ink level at the point of removal will be restored to the Videojet.*

Note*: If the ink canister code is not re-entered, the 2300 series printer will assume that the can is empty and the ink level displayed will drop to 5%.*

Note: *The ink fill system will not function and once the ink reservoir has reached its critical low value, the machine will shutdown with a low ink error.*

How Do I Clean the Printhead?

Under normal operating conditions, the automatic cleaning of the printhead will ensure high quality print. However, a manual clean of the printhead is required at intervals as described in the below sections.

Automatic Cleaning of the Printhead

Videojet is a auto-purging printer. However, it requires manual cleaning periodically to maintain functionality.

The auto-purging function of the printer may also be disabled if:

- There is no air
- The external sensor is too close to the printer (must be > 0.4 secs)
- The internal sensor is being used to detect product without the use of an external photocell (not recommended).

Two buttons (see Figure A-6 on page A-10) are located below the CLARiTY Operator System of each printer for manual cleaning operations.

Button A

By pressing and releasing button A a small quantity of ink is purged through the printhead, clearing away debris from the jetting orifices.

This procedure should only be used when print quality has degraded to an unacceptable standard. This is normally observed by 'bands' running across the print.

By pressing and holding button A, a larger quantity of ink is purged through the printhead, clearing away debris from the jetting orifices.

Button B

By pressing button B, air is used to clear away any debris that may have settled on the printhead faceplate.

Press and hold the button B for a few seconds to clean the printhead faceplate completely of ink and debris.

This is ideal for removing debris following a visual inspection of the printhead.

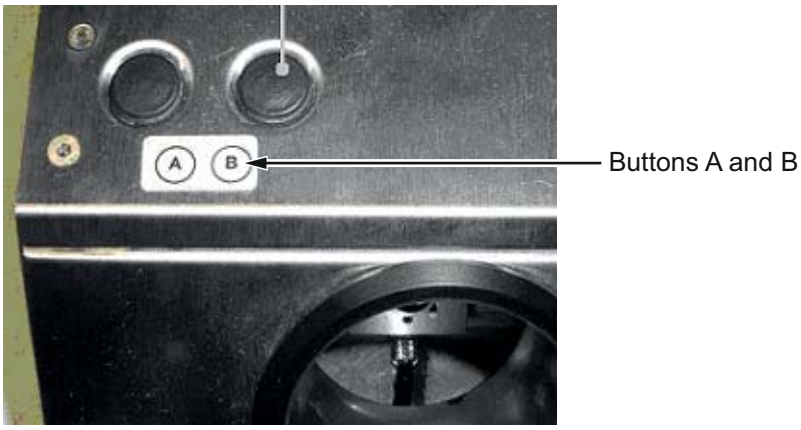

Figure A-6: Buttons A and B

Note: *The Printhead is an expensive component of the printing system.*

- The Printhead faceplate can be easily damaged if wiped, rubbed or scraped with any kind of mechanical implement.
- It is also possible to lodge permanently dirt particles into the jet orifices, rendering them inoperative.

How to Empty a Videojet 2361 Printhead for Re-priming

Refer to “Videojet 2351 and Videojet 2361” on page A-3 for instructions on how to empty a Videojet 2361.

How to Set Up a Master/Slave Network?

Refer to “How to Set up Master/Slave Network” on page 4-21.

Glossary

Standard Videojet Printer

A Videojet 2300 series printer complete with CLARiTY Operator Interface

Videojet Slave Printer

A Videojet 2300 series printer without the CLARiTY Operator Interface

Master printer

A Videojet 2300 series printer that has been designated to act as the Master member of a Master/Slave group