AIM104-386EX

Technical Manual

Product Information

Full information about other Arcom products is available via the **Fax-on-Demand System**, (Telephone Numbers are listed below), or by contacting our **WebSite** at: **www.arcomcontrols.com**

Useful Contact Information

Customer Support
Tel: +44 (0)1223 412 428
Fax: +44 (0)1223 403 409
E-mail: support@arcom.co.uk

Sales
Tel: +44 (0)1223 411 200
Fax: +44 (0)1223 410 457
E-mail sales@arcom.co.uk

or for the US: E-mail
icpsales@arcomcontrols.com

United Kingdom
Arcom Control Systems Ltd
Clifton Road
Cambridge CB1 7EA, UK
Tel: 01223 411 200
Fax: 01223 410 457
FoD: 01223 240 600

United States
Arcom Control Systems Inc
13510 South Oak Street
Kansas City MO 64145 USA
Tel: 816 941 7025
Fax: 816 941 0343
FoD: 800 747 1097

Belgium
Groen Nummer:
Tel: 0800 7 3192
Fax: 0800 7 3191

France
Numero Verto
Tel: 0800 90 84 06
Fax: 0800 90 84 12
FoD: 0800 90 23 80

Germany
Kostenlose Infoline:
Tel: 0130 824 511
Fax: 0130 824 512
FoD: 0130 860 449

Netherlands
Gratis 0800 Nummer:
Tel: 0800 0221136
Fax: 0800 022114

Italy
Numero Verde:
Tel: 0800 790841
Fax: 0800 780841
FoD: 0800 873600

Whilst Arcom's sales team is always available to assist you in making your decision, the final choice of boards or systems is solely and wholly the responsibility of the buyer. Arcom's entire liability in respect of the boards or systems is as set out in Arcom's standard terms and conditions of sale.

If you intend to write your own low level software, you can start with the source code on the disk which is supplied. This is example code only to illustrate use on Arcom's products. It has not been commercially tested. No warranty is made in respect of this code and Arcom shall incur no liability whatsoever or howsoever arising from any use made of the code.

© 1999 Arcom Control Systems Ltd
Arcom Control Systems is a subsidiary of Fairey Group Plc.
All trademarks recognised.

Certificate No. FM 12961

Arcom Control Systems Ltd operate a company-wide quality management system which has been certified by the British Standards Institution (BSI) as compliant with ISO9001:1994

Arcom CONTROL SYSTEMS

Contents

Revision History 3
Preface 4
The Manual 4
Name Conventions 4
Contents - Packing List 4
Software 4
Anti-Static Handling 5
Electromagnetic Compatibility (EMC) 5
Packaging 5
Year 2000 Compliance 5
Introduction 6
Features 6
Part 1 - Using the AIM104-386EX as an SBC with ROM-DOS 7
Getting Started 8
Equipment Required 8
Transferring Files to the AIM104-386EX Flash Disk 8
Links 12
Links and Options 14
PC/104 bus control 15
I/O Map 15
Memory Map 16
PC/104 Bus Memory Access 17
RAM Drive 17
Add on Modules 18
Reloading / Updating a New Flash Image 20
On-board Communications Channels (COM1-4) 21
Part 2 - Using the AIM104-386EX as a Target processor board 22
Getting Started 24
Memory Mapping 25
Links 28
Links and Options 30
Appendix A - Connections 31
Appendix B - IO Mapping 35
Appendix C - BIOS Settings 36
Appendix D - Circuit Diagrams 38

Arcom CONTROL SYSTEMS

Revision History

Manual	PCB	Comments	
Iss A	V1 Iss4	241198	Draft Manual for pre-release of product. (Supplied by AN1 & Edited by RHB).
Iss B	V1 Iss4	300199	Manual Updates [ECO 2797]
Iss C	V1 Iss4	120499	[ECO 2810] Minor edits.
Iss D	V1 Iss4 Mod A	220799	[ECO 2829] Revised BIOS

Preface

The Manual

This manual details the operation and features of Arcom's AIM104-386EX board. It has been designed as both a guide to getting started with the AIM104-386EX Development Kit and a reference for the hardware features of the board.

Name Conventions

Throughout this document an asterisk '*' suffix to a signal name denotes that a signal is active low (e.g. DATACK*). All numbers are in decimal unless otherwise indicated. Where a number is suffixed by 'h' the value is in hexadecimal format.

Contents - Packing List

In your AIM104-386EX package you should have:

- An AIM104-386EX in a sealed anti-static bag.
- A document titled 'AIM104-386EX Technical Manual' (this document).
- A high density 3½" floppy disk titled 'AIM104-386EX Utility Disk' (not included in the Development Kit).

If you have the AIM104-386EX **Development Kit** you should **also** have:

- A document titled 'AIM104-386EX Quickstart Manual'.
- A development Kit Motherboard.
- A mains to 5V DC power supply.
- 2 Null-modem RS232 cables.
- A CD-ROM titled 'AIM104-386EX Development CD-ROM'.

If you have the Development Kit, read the Development Kit "Quickstart" Manual **FIRST** before continuing.

Software

The 3½" Utility Disk contains:

- AIM104-386EX Target Libraries.
- ROM-DOS utilities.
- TCOM/TMON Arcom Target board utilities.

The CD-ROM provided with the Development Kit contains:

- All code included with the "Utilities Disk".
- Datasheets (in PDF format) for the Intel 386EX chip.
- Electronic copies of the manual (in PDF format).
- Demo (Borland C) programs (incl. source code).
- Paradigm Remote configuration files.

Anti-Static Handling

This board contains CMOS devices that could be damaged in the event of static electricity being discharged through them. At all times, please observe anti-static precautions when handling the board and always unpack and install it in an anti-static working area.

Electromagnetic Compatibility (EMC)

The AIM104-386EX is classified as a 'component' with regard to the European Community EMC regulations and it is the user's responsibility to ensure that systems using the board are compliant with the appropriate EMC standards.

Packaging

Please ensure that should a board need to be returned to Arcom, it is adequately packed. Use an anti-static bag for the board and use a box not bag to physically protect the board. Retain the original packing if possible.

Year 2000 Compliance

The AIM104-386EX uses the Dallas (DS1302) Real Time Clock chip. Datalight's ROM-DOS v6.22 installed on the AIM104-386EX handles the year 2000 date rollover flawlessly.

The BIOS and DOS clocks have been tested with Arcom's Y2K test software and have passed all tests (year 2000 rollover, year 2000 leap year, year 2004 leap year).

Note: There is no "CMOS CLK".

Introduction

AIM104-386EX is a single board computer with the standard PC/104 form factor of 95 x 90mm.

As standard the board is supplied with 1Mb of SRAM and 1Mb of FLASH. Although four memory mapping options are jumper selectable, the default memory map is arranged to mimic a PC with the FLASH memory viewed through a 128kb page at top of (1Mb) memory space. This organisation allows the use of the FLASH for BIOS at boot time and as a FLASH filing system. When running under ROM-DOS, the Flash appears as a seamless re-writable disk drive of 768KB.The BIOS is shadowed in SRAM during normal operation. A later section in this manual will address the additional memory mapping modes.

The board is supplied to boot up with ROM-DOS as default. The board can be used as either a Single Board Computer with ROM-DOS or as a Target processor. The development kit provides all the necessary hardware and software to enable the user to use and configure the board as either. This manual contains two main sections, the 1st deals with using the board as an SBC, the 2nd, using it as a Target board.

Features

- Intel 386EX 33MHz processor
- 1Mb SRAM with off-board battery backup capability
- 1Mb FLASH configurations of 128kb x 8 pages, 256kb x 4 pages, 512kb x 2 pages or linear access.
- PC compatible COM1,COM2, and COM3 RS232 serial ports
- COM4 configured for RS485 (non-isolated)
- Real Time Clock chip with off-board battery back-up
- 10 way header for TTL I/O
- RTC and SRAM can be battery backed. Current consumption typically 1µA at 3.6v. (Battery voltage must be greater than 2.5v and less than VCC).
- 16- bit PC/104 bus interface and stack through headers
- Hardware watchdog with start-up or software trigger
- Hardware event counter interrupt (500msec) for power down mode
- Software selected power down modes
- Dark boot option (selectable in BIOS setup)
- Two user LED outputs
- User-assigned jumper link
- 5VDC only operation
- Software development/download via COM ports
- Power consumption, typical 500mA @ +5V. Power-down mode 150mA @ +5V.
- MTBF: 155,750 hours
  Calculated using generic figures from MIL-HDBK-217F at ground benign.
- Operating temperature range, -40°C to 75°C

If using the board as a Target Processor, and you do not wish to use the ROM-DOS platform please turn to Part 2 ‘Using the AIM104-386EX as a Target Processor’, page 17, otherwise, read Part 1 and ignore Part 2.

Part 1 - Using the AIM104-386EX as a Single Board Computer with ROM-DOS

The AIM104-386EX Architecture

The AIM104-386EX is based on the Intel 386EX embedded microcomputer. This part includes COM ports, interrupt registers and code compatibility with the PC/AT architecture. Additional I/O features are mainly supported by the 16C552 combo chip, and a PLD provides the PC/104 interface control.

For PC compatibility with add-on PC/104 boards, the default memory map of the board includes 640kBytes of lower memory (static CMOS RAM), 128kBytes of spare (PC/104) memory space and 128kBytes of upper memory space (for BIOS shadow).

Systems Bios

The AIM104-386EX board is supplied with a Datalight BIOS which includes extensions to support the Flash Filing System. The board boots from Flash and will then start ROM-DOS 6.22 automatically. *ROM-DOS 6.22 is a trademark of Datalight Inc.*

COM ports

Using the PC/AT terminology, COM1 and COM2 are supported directly by the 386EX microcomputer with 16450 compatibility. As standard these ports support interrupt driven comms through the normal IRQ3 and IRQ4 interrupts.

COM3 and COM4 are via the combo chip which provides 16550 compatibility. COM3 is assigned as the keyboard/terminal connector. COM1,2 and 3 all have on-board RS232 buffer devices so that standard RS232 peripherals can be used. COM4 has a non-isolated RS485 buffer operating half-duplex under the control of RTS4 for direction.

Real Time Clock

A DS1302 real time clock chip supports the DOS clock time and date functions. The device can be supported by off-board battery backup if time and date is to be kept correct when the board is not powered. Typical battery supply current is 1 microamp.

Watchdog Timer

The Watchdog Timer may be started from power up by removing LK16 or through software triggering. The Timer is re-triggered by writing any value (e.g 0x01) to address 0xFC08. The timer has a duration of about six seconds which may be extended indefinitely by repeated software triggers. If the watchdog timer is left to timeout, a full reset will be generated to restart the board.

However, the ROM-DOS bootup delays total 6 seconds (these delays allow time for user to press keys to enter setup etc). Thus LK16 should NOT be removed if you are booting up into ROM-DOS. The first trigger sent to the watchdog will start it running when LK16 is fitted.

Event Timer

Event Timer is a fixed 500msec clock enabled by the first watchdog timer software trigger. The clock output may be connected to NMI with LK8a to generate periodic edge triggered interrupts. This timer combined with the power-down mode of the 386EX allows very low average power consumption. Alternatively it may be used to trigger a low rate continuous monitoring application.

Getting Started

If you have the Development Kit, read the development kit 'Quickstart' manual instead of this section of the manual.

Equipment Required

- Power supply (+5V at 1A minimum) connected to PL4 and/or PL5 (PC/104 bus connectors) or to PL8 (Molex power connector). See Appendix B, Connections.
- IBM PC/AT compatible computer running terminal emulation software (e.g. Hyper Terminal or Procomm Plus) via one of its serial communications ports (COM1 or COM2).

Installation and Setup

1) Ensure that the links on the AIM104-386EX board are in their default configurations.

2) Plug an RS232 null-modem cable between COM1 or 2 of the host PC to COM3 of the AIM104-386EX board. (A break-out cable and connector may be required if you are not using the AIM104-386EX Development Kit baseboard).

3) Start the terminal emulator program running on the host PC. Set the communications protocol to 19200baud, 8 bits, no parity bit, 1 stop bit (i.e. 19200,8,n,1), software handshaking..

4) Switch on power to the AIM104-386EX board.

5) The terminal emulator window should show the AIM104-386EX board booting up, running a RAM test, running through BIOS setups and then starting ROM-DOS and finishing with the C:\> prompt.

Transferring Files to the AIM104-386EX Flash Disk

There are 3 utilities provided that can be used to transfer files from the host PC to the AIM104-386EX flash disk. These are TRANSFER, RSZ and REMSERVE.

If a second COM port is not available on the host PC, or you do not wish to connect to a second COM port, then files can be transferred via the serial console port already connected between the AIM104-386EX and the host. However, only RSZ can be used to transfer files using this configuration.

RSZ File Transfer (using only one COM port)

In the terminal emulator type:

```
RSZ /p3 /b115200 /i1 /r
```

Now set the terminal emulator baud rate to 115200 baud. Most terminal emulators will allow you to transfer a file using a 'file transfer' utility.

Remember that RSZ is a ZMODEM protocol.

Once the transfer is complete, reset the terminal emulator back to 19200 baud. You should now be back to the C:\ prompt of the AIM104-386EX flash disk. IF you are using hyperterminal, you must disconnect and then reconnect the comms link whenever changing the baud rate. (Use the toolbar buttons).

If you cannot transfer a file within your terminal emulator then you must first shut it down after entering the above command. Open up a DOS window and then type:

```
RSZ /p1 /b115200 /s [filename]
```

(Replace `/p1` with `/p2` if using COM2 instead of COM1)

Refer to page 10 for more information on RSZ.

Note: Obviously your path needs to be set-up to include the directory that RSZ has been installed to.

File Transfer (using two COM ports)

Both COM ports of the PC are required to use this method. This example uses the TRANSFER utility, but RSZ could equally be used instead. It assumes that the host PC's COM1 port is connected to COM1 of the AIM104-386EX and that the host PC's COM2 port is connected to COM3 (console) of the AIM104-386EX. Thus the terminal emulator should be configured to use COM2.

In the terminal emulator window type:

```
TRANSFER /R /B115200 /COM1 [filename]
```

Open a DOS window on the host PC and type:

```
TRANSFER /S /B115200 /COM1 [filename]
```

During the transfer you should see lots of 'T's on the host and lots of 'R's on the target.

Refer to page10 for more information on TRANSFER.

Borland C Turbo Debug Remote

The Borland C Turbo Debug Remote facility is the most appropriate for developing code. It requires that the AIM104-386EX be loaded with the file TDREMOTE.EXE. After this the application code can be loaded and run on the AIM104-386EX within the familiar Turbo Debug environment.

To run in remote mode requires a null-modem RS-232 cable connected between the host PC and COM1 or COM2 of the AIM104-386EX. If you are using 2 PC COM ports, then you can simply type in the terminal emulator:

```
TDREMOTE -rpx -rsN
```

When X is 1 or 2 (the COM port to be used), N is the baud rate to be used. This is specified as:

```
-rs1        9600baud
-rs2        19,200 baud
-rs3        38,400 baud
-rs4        115,200 baud
```

If you are only using one serial link between the PC and the host, it will be most convenient to add the above TDREMOTE command into the autoexec. bat file, reconnect the RS-232 cable to COM1 (or 2) of the AIM104-386EX and then reboot it.

The AIM104-386EX is now ready to receive the application. Next, we set up the host PC. Type the following at the DOS prompt:

```
TD -rpx -rsN AppName
```

Where X is the COM port and N the baud rate as before. Note that the link speed set here must be the same as that set up on the AIM104-386EX.

AppName refers to the application name (the .EXE file). When you have done this you will see the TURBO DEBUGGER screen. *Full details of Remote Debugging can be found in the BORLAND HELP files or in BORLAND manuals.*

If the TDREMOTE command is added to the AUTOEXEC.BAT file and you have difficulty exiting from the utility (with ctrl-C) you can bypass AUTOEXEC.BAT commands (line by line) by pressing shift-B when ROM-DOS starts. See Appendix C (Start-up Options sections) for more details.

TRANSFER Options

```
TRANSFER V6.22 (Revision 2.60.19)
Copyright (c) 1989-1998 Datalight, Inc.
Usage = TRANSFER {options} filename

Options
       /S    Send a file
       /R    Receive a file
       /B#   Set baud rate
       /COM# Use COM port 1. . 4 for transfer (default is CONsole)
       /IRQ# Use IRQ number 3 . .15 (defaults IRQ4=COM1,COM3
                                          IRQ3=COM2,COM4)
       /Q    Display no output to the screen (quiet)

Transfer uses the XMODEM protocol to send/receive files.
```

RSZ

RSZ is a ZMODEM file transfer utility which allows the transfer of multiple files in a simple transfer.

```
RSZ - ZMODEM file transfer utility.
V6.22 (Revision 2.60.23) - OEM
Copyright (c) 1989-1998 Datalight, Inc.

Usage: RSZ/ Pn[/In] /Bn /Hn /Fn [R| [S file1 [file2 . . .]]]
 /P    port number:
            n = {1,2,3,4} for COM1 to COM4 (default is 1 for COM)
 /I    IRQ number:
            n = {0-15} for IRQ0 - IRQ15 (default is IRQ3 for COM2 and
       COM4 and is IRQ4 for COM1 and COM3)
 /B    baudrate, if not specified uses current port parameters:
            n = 50, 110, 300, . . . , 115200. Always "N81" when
       changed.
 /H    handshaking options, both sides must use the same one of:
            o = none (default), 1= software, 2= hardware
 /F    file management options (all files are "binary"), one of:
            o = skip, 1= resume, 2= make duplicate, 3= replace
       (default)
 /R    receive files specified by sender using ZMODEM protocol
 /S    send the specified files using ZMODEM protocol, wild-cards
       allowed.
 /Q    turn off status display
 /V    force status display on when console is redirected to 2nd COM
       Port.
Examples:   RSZ /r
            RSZ /p3 /b115200 /h2 /f0 /s a.b lmno .p z.*
```

Links

Link 1- COMs Power down. (Default is not fitted)
Fit to allow full power down of COM1 and COM2 driver ICs when entering power down mode. (P3.6 must be re-programmed).

Link 2 and Link 5
LK2C fitted (default) connects COM3 interrupt to INT0.

LK5A fitted (default) connects P3.0 to LED 1 output.

Non default options

LK5B connects P3.0 to COM 3 interrupt (fit link LK2B) or to IRQ4 (fit link LK2A)

Link 3 and Link 6
LK3C fitted (default) connects COM4 interrupt to INT4.

LK6A fitted (default) connects P3.1 to LED 2 output.

Non default options

LK6B connects P3.1 to COM 4 interrupt (fit link LK3B) or to IRQ 3 (fit link LK3A)

Link 4A - Dark Boot Overdrive (default is not fitted)
The BIOS setup can be modified so that the AIM104-386EX 'Dark Boot' (see appendix C). Fit Link 4A to overdrive the dark boot. This is so that the dark boot option can then be switched off in the BIOS setup. Note: This overrides all non-default BIOS settings.

Link 4B - User assigned link. (default-not fitted)
Link 4B can be user assigned. When not fitted, P1.7 is pulled high, when fitted P1.7 is pulled low.

Link 4C - ROM-DOS (default is not fitted)
If Link 4C is NOT fitted, the AIM104-386EX will automatically start ROM-DOS and boot up to the DOS 'C' prompt. Fit to boot to Arcom's TMON (Target Monitor) prompt.

Links 7,9 and 10 - Flash page control links.

	A	B
LK7	Flash PG0	A17
LK10	Flash PG1	A18
LK9	Flash PG2	A19

Factory defaults are LK7A, LK10A and LK9A. DO NOT change if using ROM-DOS. (See Target section for Flash paging details)

Link 8
NMI source

LK8A	Connects Event Timer to NMI (default)
LK8B	Connect ‘External NMI (EXTNMI,PL1 pin 28) to NMI

Link 16 Watchdog (default fitted).
Fit to disable watchdog at startup.

Links and Options

Top view link settings (factory default)

Watchdog is software triggered.

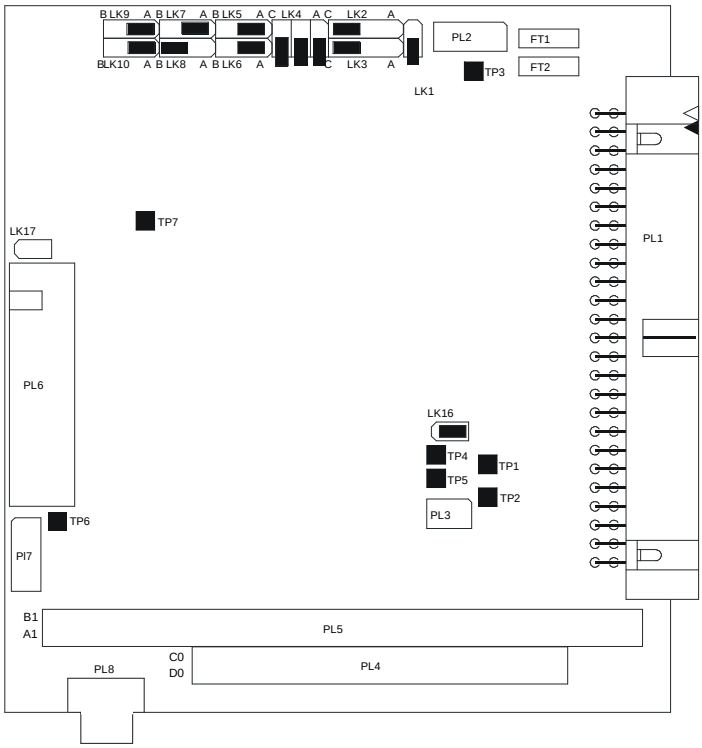

User Configuration Diagram

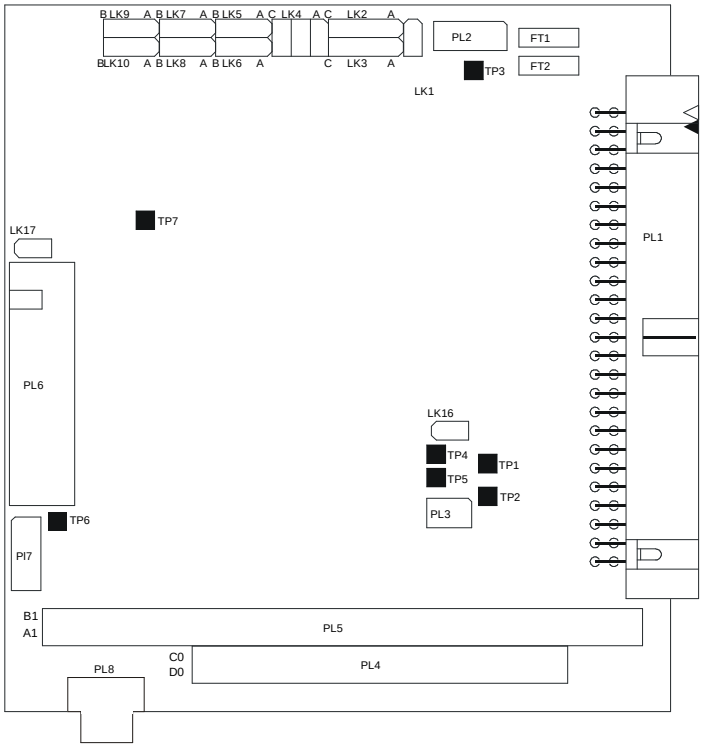

PC/104 bus control

I/O Map

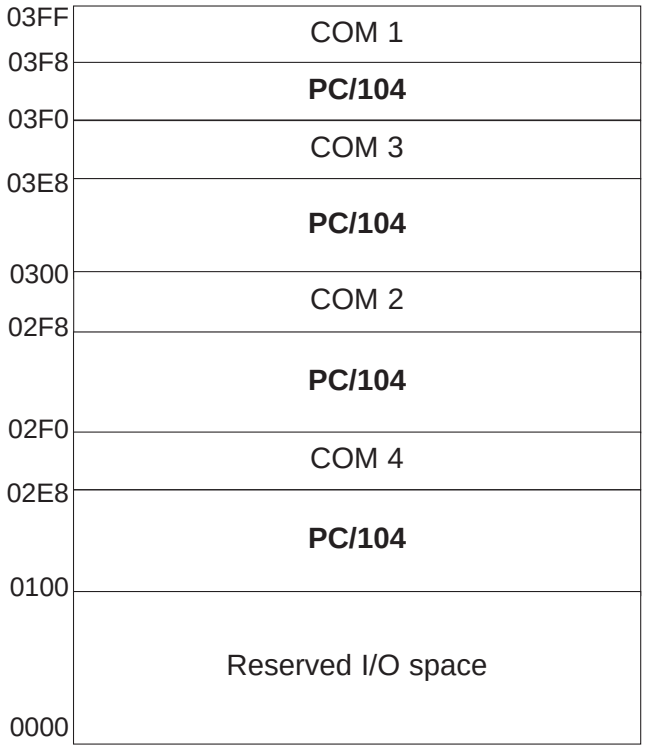

The PC104 bus is accessed via I/O reads from and writes to PC/104 addresses shown in the table on page 10.

(See Appendix B for further details)

Memory Map

<table>
<tr><td>10000</td><td>TMON386104</td><td rowspan="3">Note: LHS shadowed into SRAM

This 64KB segment is used by FlashFx driver as top half of 128KB paged flash window. When not in FlashFx R/W critical section, visibility is SRAM.</td></tr>
<tr><td>FC00
F800</td><td>Datalight BIOS
FlashFx BIOS Extension</td></tr>
<tr><td>F400</td><td>Paradigm Remote Kernel</td></tr>
<tr><td>F000</td><td>ROM-DOS BIOS Extension (replaces IBMDOS.COM, IBMBIO. COM)</td><td>Note: LHS shadow into SRAM

This 64KB segment is used by FlashFx driver pages as lower half 128KB pages flash window. When not in FlashFx R/W critical section, visibility is SRAM.</td></tr>
<tr><td>E000</td><td colspan="2">PC/104 bus
(Not accessible if VGA adapter is present)</td></tr>
<tr><td>D000
CA00</td><td colspan="2">Unused SRAM</td></tr>
<tr><td>C800-</td><td colspan="2">VGA BIOS Extension - If PC/104 VGA Card connected the Datalight BIOS will copy the VGA BIOS Extension from the card to onboard SRAM</td></tr>
<tr><td>C000</td><td>Unused SRAM
OR
103KB RAMDRIVE (which can be battery backed) ‘D:\’</td><td>VGA adapter Memory access (if present)</td></tr>
<tr><td>A000</td><td colspan="2">640KB Base Memory</td></tr>
<tr><td>0000</td><td colspan="2"></td></tr>
</table>

PC/104 Bus Memory Access

When ROM-DOS is run on the AIM104-386EX board, the default setting is for a PC/104 memory window between D0000 and E0000. Memory addresses A0000 through D0000 are mapped as unused SRAM (see memory map). See also "Using a PC/104 VGA card" below.

It is possible for the PC/104 memory window to be moved and/or changed in size. However, the start address of the memory window must be a whole number multiple of the memory window size.

For example, a 32Kbyte (8000h) PC/104 memory window could be set up to start at D8000h (27 x 32Kbyte) and finish at E0000h. A 128Kbyte window could be mapped at A0000h (5 x 128Kbyte) to C0000h, but a 128Kbyte window could NOT be mapped to start at B0000h (5.5 x 128Kbyte).

See chapter 14 of the Intel 386EX Embedded Processor Manual (included on the Development Kit CD-ROM, or via Intel's website) for details of the registers that must be changed by the users own code to change the set up of the PC/104 bus memory window.

RAM Drive

A 103KB 'RAM Drive' (D:) can be set up to use the unused SRAM between A0000 and C0000. This is done by typing the following at the DOS prompt, or by adding it to your autoexec.bat file:

```
FXFMT 81
```

The RAM drive will behave in a similar manner to the flash (C:) drive, and is accessed in exactly the same way, via ROM-DOS.

The contents of the drive will not be changed or lost when re-booting the AIM104-386EX, and can be indefinitely preserved if the SRAM is battery-backed via an external battery (See 'Features' for battery requirements).

Note: The RAM drive can be used as well as a VGA controller or other PC/104 card as it multiplexes accesses to A0000 - C0000.

Do not run FXFMT with a drive descriptor of 80 as this will reformat the flash drive rendering your system unbootable. If this occurs you will need to reinstall a default flash image using TCOM.

Add-on Modules

Using a PC/104 VGA Card

If a VGA card is added, it is automatically detected at boot up time, and a suitable memory window for the card is set up at A0000 to C0000. If a VGA card is used no other PC/104 memory access is possible.

Note: 1) The keyboard input (if required) is still via the serial console (COM3) port.
2) This does NOT affect the PC/104 bus I/O accesses. See the I/O map for available PC/104 I/O addresses.

Add-on Flash Cards

An M-Systems flash card can be added to the AIM104-386EX. The flash card should be set to use the (default) PC/104 memory window between D0000h and E0000h. The flash card must also be set to NOT run the on-board flash BIOS. To do this the following must be carried out:

1) Boot the system with the SDD 'Master Enable' Link removed.

2) Insert the Master Enable link at the command line.

3) Execute the PCFDLFDC.COM driver. The following or something similar will be displayed:

```
C:\>pcfdlfdc
LFDC Low-Level Driver - Version 1.12 (ES) (C) Copyright 1995-
96, M-Systems Ltd.
```

4) Execute the TFFS.COM driver. The following or something similar will be displayed:

```
C:\>tffs /DRIVE=A
TRUE Flash File System -- Version 3.3.3-SP (ES) Copyright (C)
M-Systems, 1992-1996
Installed TrueFFS drives: A
```

(**Note:** Use drive A)

5) Format the M-Systems SDD using:

```
tformat A: /S:!
```

This will remove any existing on-flash BIOS extension. The following or something similar should be displayed:

```
C:\>tformat A: /S:!
TFORMAT Version 3.3.3-SP (ES)
Copyright (C) M-Systems, 1992-1996

WARNING: All data on drive A: will be destroyed.
Continue? (Y/N)y

Medium physical size is 8192 KBytes
Boot-image size is 0 KBytes
```

```
Finished 8192 KBytes
Format complete. Formatted size is 7811 KBytes.
```

6) Put the following lines in the AUTOEXEC.BAT file:

```
pcfdlfdc
tffs /DRIVE=A
```

7) Reboot the system. The M-Systems flash disk will now be accessible through the A: drive.

Note: A PC/104 flash card cannot be used as well as a VGA adapter card with the AIM104-386EX.

PCMCIA Adaptor Card

An 'Intel Compatible' PC/104 PCMCIA adapter can be fitted to the AIM104-386EX and used with ATA type Flash and SRAM cards. Add the following to CONFIG.SYS:

```
DEVICE = ATA.SYS
```

Read the ROMDOS\UTILS\ATA.TXT file on the CD-ROM or floppy disks that accompanied the AIM104-386EX board for more information. The adapter card must be Intel 82365 compatible.

Ethernet Card

An NE2000 compatible PC/104 ethernet card can be connected to the AIM104-386EX. Suitable TCP/IP software such as Datalight Sockets is required in order to transfer data over the ethernet link. Datalight Sockets runs as a DOS TSR and requires about 70KB of base memory. Contact Datalight Inc. (www.datalight.com) for more information. *Datalight Sockets is a trademark of Datalight Inc.*

Re-loading / Updating a New Flash Image

The TCOM.EXE utility is used for the BIOS image update. The TCOM utility should be found on your PC in directory C:\386104\TCOM unless you changed the default directories when installing the AIM104-386EX software.

1) First, check that your TCOM.INI file is set to use the correct PC COM port that you are using, e.g. COMPORT= 2;

Note: If `COMPORT= 1`; then `IRQ_USED= 4;`

If `COMPORT= 2`; then `IRQ_USED= 3;`

Also, check that the following line is included in your TCOM.INI file. This ensures that the monitor program protection is disabled.

```
PROTTMON= N;
```

If this line is not present or is set to 'Y' then it must be added or changed. Please note that there should be no space between the first word of the line and the "=" sign, and there should be a single space between the "=" sign and the value, followed immediately by a semicolon.

2) Boot up the AIM104-386EX board with link 4C fitted.

3) Open up a DOS window and run TCOM.EXE

4) Press function key 'F7'. This will cause TCOM to detect the AIM104-386EX board and will set the baud rate to 115200. If the board is not detected, check your cabling configuration.

5) Press function key 'F4'. You will be prompted for the filename to download. Type in the full path and filename for the binary image to be downloaded to Flash (e.g. C:\386104\IMAGES\386104L.BIN) and then press Return. The new image to be loaded should be 1Mb in size (i.e. 0x10000).

6) You will be prompted for the location offset. Hit '0' (zero) and then hit Enter.

7) A macro will now be run which sequentially erases the Flash sectors and re-programs them with the new file image. This will take a few minutes to complete. Once the download is complete the message "100000h bytes downloaded successfully" will appear in TCOM's red message bar located at the bottom of the window.

8) Once complete press the function key 'F10' to exit TCOM. Close down the DOS window (to make the PC COM port available to your terminal emulator).

9) Run your Terminal Emulator program, **remove link 4C** and reboot the AIM104-386EX. [If you are using TCOM as your Terminal Emulator you must press 'F7' again to ensure that TCOM recognises that it is no longer communicating with a 'Target' board.]

On-board Communications Channels (COM1-4)

COM1 and COM2

Communications channels COM1 and COM2 are 16C450 (8250 compatible) and can be used as standard PC (RS-232) serial communications channels using the normal IRQ3 (COM2) and IRQ4 (COM1) interrupts.

COM3

The default is for COM3 to be set up as the 'console' port for connection to a host PC (for development). COM3 can be initialised so that it can be used as a standard serial communications port by calling the BIOS interrupt handler 0x60 with register AX containing 0x0200, i.e. INT 60h function 2.

It is re-initialised as the console port by calling the BIOS interrupt handler 0x60 with register AX containing 0x0300, i.e. INT 60h function 3.

```
Example (Borland C v4.52)

// Make COM3 available for serial communications
_AX = 0x0200;
geninterrupt(0x60);

// Make COM3 available as a console
_AX = 0x0300;
geninterrupt(0x60);
```

COM3 is 16C550 compatible. The COM3 interrupt line (COM3IRQ) is connected by default to the 386EX INT0 interrupt line, which is mapped to IRQ1. (See 'Links' section for further details on link settings).

COM4

COM4, like COM3 is controlled via a 16C550 UART. However, the output has been configured for RS-485 communications (i.e. half-duplex, 3-wire differential , peer-to-peer comms). The transmit/receive driver direction is controlled by the RTS signal as follows:

RTS set (high)	-> Transmit	(/RTS4 pin = low)
RTS cleared (low)	-> Receive	(/RTS4 pin = high)

The RTS should only be negated after a transmission once the UART transmitter is empty. This is indicated by the 'Transmitter Empty' bit (TEMT) of the Line Status Register (LSR). **Reception of a Transmit Buffer Empty interrupt (indicating that the transmit FIFO is empty) is not a valid condition for negating RTS. The output shift register of the UART is still active until the TEMT bit is set.**

The COM4 interrupt line (COM4IRQ) is connected by default to the 386EX INT4 interrupt line, which is mapped to IRQ8. (See 'Links' section for further details on link settings).

Part 2 - Using the AIM104-386EX as a Target Processor

Using the AIM104-386EX

The AIM104-386EX is based on the Intel 386EX embedded microcomputer. This part includes COM ports, interrupt registers and code compatibility with the PC/AT architecture. Additional IO features are mainly supported by the 16C552 combo chip, and a PLD provides the PC/104 interface control.

For PC compatibility with add-on PC/104 boards, the default memory map of the board includes 640kBytes of lower memory (static CMOS RAM), 128kBytes of spare (PC/104) memory space and 128kBytes of upper memory space (for BIOS shadow).

On-board functions

COM ports

Using the PC/AT terminology, COM1 and COM2 are supported directly by the 386EX microcomputer with 16450 compatibility. As standard these ports support interrupt driven comms through the normal IRQ3 and IRQ4.

COM3 and COM4 are via the combo chip which provides 16550 compatibility. COM3 is assigned as the keyboard/terminal connector COM1,2 and 3 all have on-board RS232 buffer devices so that standard RS232 peripherals can be used. COM4 has a non-isolated RS485 buffer operating half-duplex under the control of RTS4 for direction.

Real Time Clock

A DS1302 with serial data lines is interfaced through the COMBO chip. This device, which has a dedicated 32.768khz crystal, is powered through the battery backup circuit and may be supported by an external battery. Typical battery supply for the on-board functions is 1 microamp. Accessed via CS6. Includes 31 bytes of RAM which may be battery backed via an external battery.

Keypad IO port

PL2 is a 2mm pitch header which carries eight of the signals from the COMBO chip. Four of these signals, PD4..7 are configured as outputs and the other four have pull-ups to +5V. This port is suitable for local IO such as scanning a 4x4 keypad, using a software driver (not supplied).

Note: If this port is used for IO, the state of PD0..3 must be maintained in all circumstances.

FLASH page register

PD0..3 of the COMBO chip are dedicated to the FLASH page register and are controlled by the AFFS. Any application which uses the parallel port registers of the COMBO chip should ensure that these signals are left unchanged. The read-back register should be used to obtain a current value which is then incorporated into any new value written to PD0..7.

PC/104 bus control

Bus accesses are allowed for IO instructions mapped from 0x100 to 0x3FF. This mapping is set by programming CS3 on the 386EX. Memory accesses to PC/104 are controlled by CS1. A programmable logic device is used to generate suitable timings for both IO cycles and memory cycles. These are fixed at approximately 500nsec and 220nsec respectively.

Function	Preferred Address	M/IO	PIN
FLASH ENAB	0x0E0000-0x0FFFFF	M	UCS
EXT PIO REGs	0xEC00-0xECOF	IO	CS6
EXT COM.B REGs	0x2E8-0x2EF	IO	CS5
EXT COM.A REGs	0x3E8-0x3EF	IO	CS4
PC/104 IO SPACE	0x000-0x03FF	IO	CS3
WATCHDOG	0x0FC08-0x0FC0B	IO	CS2
PC/104 Memory	0x0A0000-0x0BFFFF	M	CS1
SRAM ENAB	0x0000000-0x0FFFFF	M	CS0

I/O registers

For compatibility with the PC/AT many of the 386EX registers have pre-assigned IO addresses including some which are not used in the standard AIM104-386EX. These addresses should not be used for other functions. (See Appendix C).

Embedded applications

For stand alone controller applications reliable operation and minimal maintenance support require that the controller can recover from temporary faults such as brown-out of the power. A power monitor circuit resets the board automatically if it detects and under-voltage condition.

Watchdog Timer

Watchdog Timer may be started from power up, by removing LK16, or through software triggering. This timer has a duration of about six seconds which may be extended indefinitely by repeated software triggers. If the watchdog timer is left to time out a full reset will be generated to restart the board. To use this feature the application must be written to boot into normal running mode from reset.

The Watchdog is triggered/ re-triggered using AIM104-386EX library function ‘vArWatchdog’.

Event Timer

Event Timer is a fixed 500msec clock enabled by the first watchdog timer software trigger. The clock output may be connected to NMI with LK8a to generate periodic edge triggered interrupts. This timer combined with the power-down mode of the 386EX allows very low average power consumption. Alternatively it may be used to trigger a low rate continuous monitoring application.

Getting Started

If you have the Development Kit, read the development kit 'Quickstart' manual instead of this section of the manual.

Equipment Required

- Power supply (+5V at 1A minimum) connect to PL4 and/or PL5 (PC/104 bus connectors) or to PL8 (Molex power connector). See Appendix B, Connections.
- IBM PC/AT compatible computer running terminal emulation software (e.g. Hyper Terminal or Procomm Plus) via one of its serial communications ports (COM1 or COM2).

Installation and Setup

1) Ensure that all links on the AIM104-386EX board are in their default configurations, except link 4C WHICH MUST BE FITTED.

2) Plug an RS-232 null-modem cable between COM1 or 2 of the host PC to COM3 of the AIM104-386EX board. (A break-out cable and connector may be required if you are not using the AIM104-386EX Development Kit Board)

3) Switch on power to the AIM104-386EX board

4) Open a DOS window on the host PC. Modify the file TCOM.ini (included on the Utilities disk) to specify whichever COM port the host PC is using (default COM port is COM2). Run TCOM.EXE (included on the Utilities disk). A list of options can be obtained by pressing 'F1'.

It is suggested that users developing Target code for the AIM104-386EX use Paradigm (not included in the development kit package) to debug their code. The remote portion of Paradigm, required to run on the target board is already pre-installed on the AIM104-386EX. The remote portion can be enabled in the BIOS set-up (see Appendix C).

To run target code on the AIM104-386EX, (once it has been debugged) the boot jump vectors must be changed to jump to the program location at which the user has placed their code in the Flash.

Memory Mapping

The AIM104-386EX offers various memory mapping scheme to provide the maximum amount of flexibility concerning the onboard memory. As standard, the AIM104-386EX provides 1Mb of Static RAM and 1Mb of FLASH. Although the full 1Meg of each memory area is always on board, the way that it is mapped into the logical memory map is controlled by 3 “Page Select” bits and by address lines A17, A18, and A19. (See ‘Links’ section)

When running 16 bit “DOS” type applications, the logical memory map presented to the user cannot exceed 1Meg. In these types of applications, the user can select between 3 different memory mapping schemes as summarised in the table below:

Controlled by...						SRAM	FLASH	FLASH Page Control
PG0	PG1	PG2	A17	A18	A19			
X	X	X				896K	128K x 8	PG0, PG1, PG2
	X	X	X			768K	256K x 4	PG1, PG2
		X	X	X		512K	512K x 2	PG2
			X	X	X	1Meg	1Meg	None (flash memory model) /flat model

When running in protected or “flat” 32 bit mode, then maximum flexibility is achieved by simply presenting the entire memory map to the application. In this mode of operation the application or memory drivers do not have to worry about page selection and all SRAM and FLASH memory appear at their respective linear address.

Regardless of which mode of operation is chosen above (16 or 32 bit) the memory layout on the AIM104-386 also provides a memory “hole” selection mechanism. This is accomplished by using CS1 chip select within the 386EX internal control peripherals. By selecting an address range for the activation of CS1, the user may create a memory hole that will allow memory and I/O cycles (using CS3) to activate off-board functions. In this manner I/O controllers such as VGA and network adapters can be mapped into the memory space of the AIM104-386EX.

TMON (which is run whenever LK4C is fitted) automatically sets up a PC/104 bus memory window between 0x0A0000 and 0x0BFFFF.

The flat memory model address space is as follows (using absolute address values):

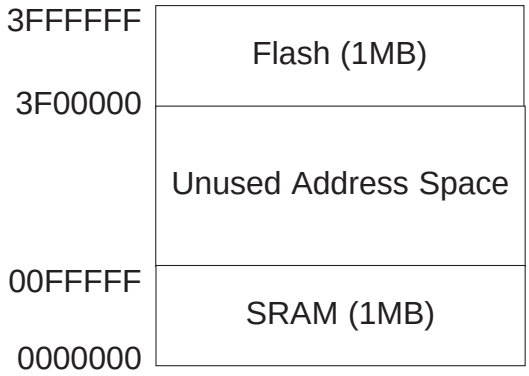

Note: On boot-up PG0, PG1 and PG2 are always true. Thus regardless of link settings, the bootstrap always boots to 3FFFFF0 (standard x86 architecture).

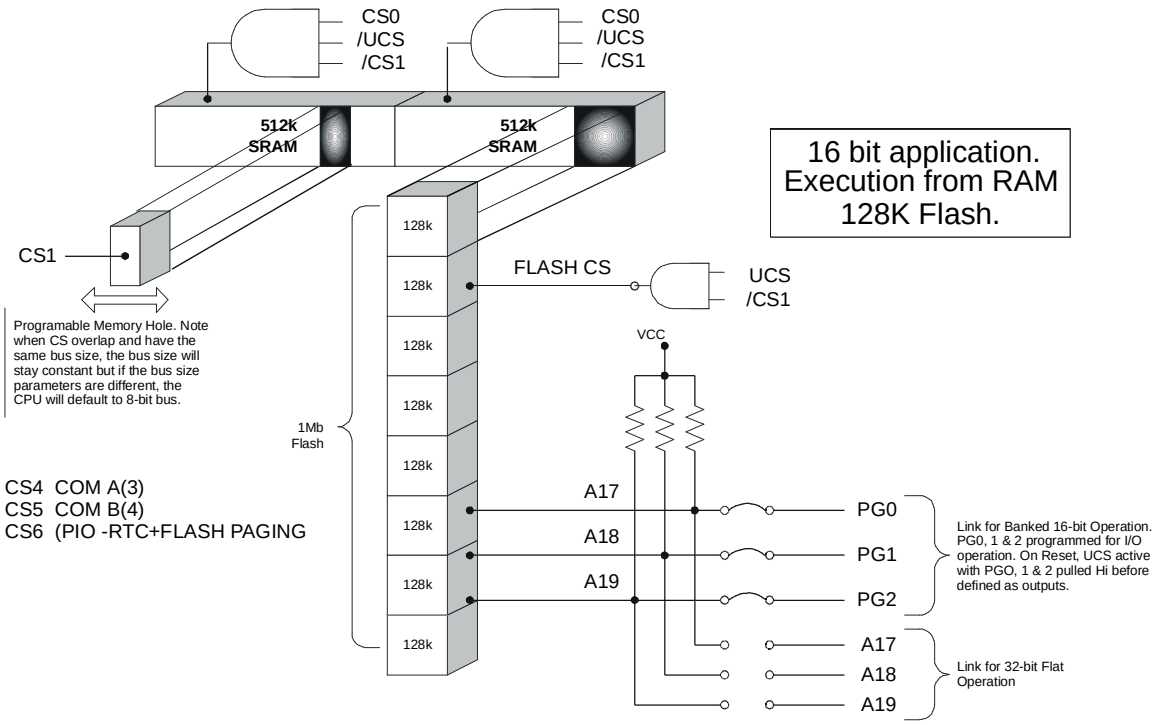
CS0
/UCS
/CS1
CS0
/UCS
/CS1
512k
SRAM
512k
SRAM
16 bit application.
Execution from RAM
128K Flash.
CS1
128k
128k
128k
128k
128k
128k
128k
128k
FLASH CS
UCS
/CS1
VCC
1Mb
Flash
Programable Memory Hole. Note when CS overlap and have the same bus size, the bus size will stay constant but if the bus size parameters are different, the CPU will default to 8-bit bus.
CS4 COM A(3)
CS5 COM B(4)
CS6 (PIO -RTC+FLASH PAGING
A17
A18
A19
PG0
PG1
PG2
Link for Banked 16-bit Operation. PG0, 1 & 2 programmed for I/O operation. On Reset, UCS active with PGO, 1 & 2 pulled Hi before defined as outputs.
A17
A18
A19
Link for 32-bit Flat Operation

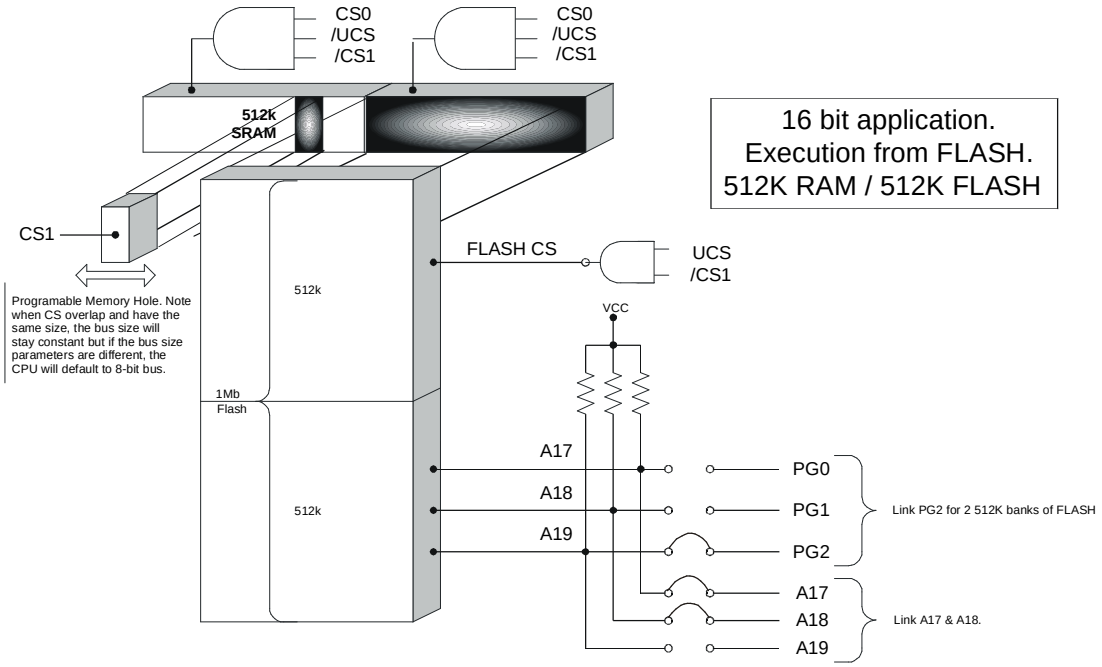
CS0
/UCS
/CS1
CS0
/UCS
/CS1
512k
SRAM
16 bit application.
Execution from FLASH.
512K RAM / 512K FLASH
CS1
FLASH CS
UCS
/CS1
512k
VCC
1Mb
Flash
512k
Programable Memory Hole. Note when CS overlap and have the same size, the bus size will stay constant but if the bus size parameters are different, the CPU will default to 8-bit bus.
A17
A18
A19
PG0
PG1
PG2
Link PG2 for 2 512K banks of FLASH
A17
A18
A19
Link A17 & A18.

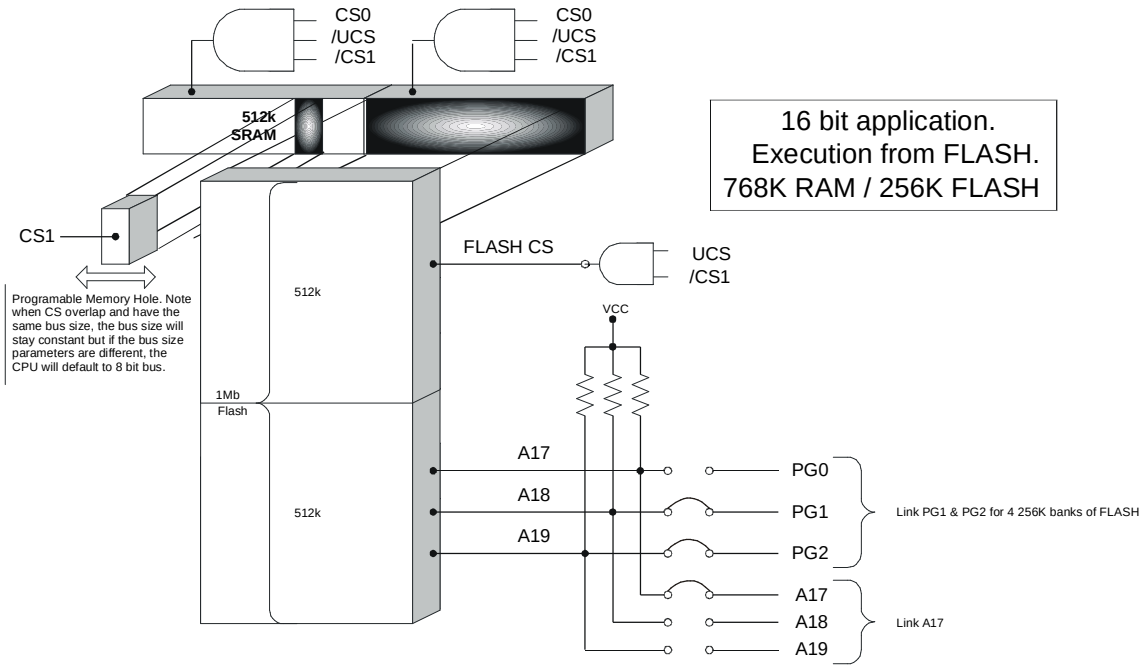
CS0
/UCS
/CS1
CS0
/UCS
/CS1
512k
SRAM
16 bit application.
Execution from FLASH.
768K RAM / 256K FLASH
CS1
FLASH CS
UCS
/CS1
Programable Memory Hole. Note when CS overlap and have the same bus size, the bus size will stay constant but if the bus size parameters are different, the CPU will default to 8 bit bus.
512k
VCC
1Mb
Flash
A17
A18
A19
512k
PG0
PG1
PG2
Link PG1 & PG2 for 4 256K banks of FLASH
A17
A18
A19
Link A17

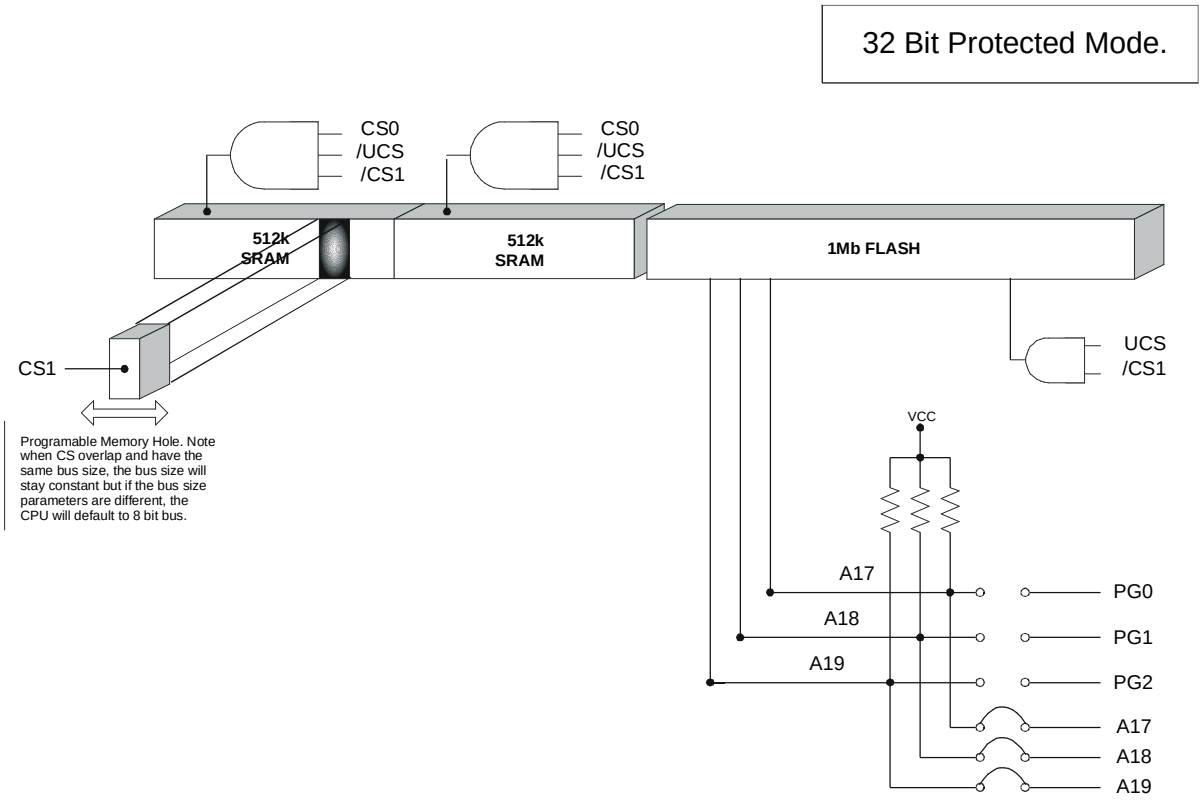
32 Bit Protected Mode.
CS0
/UCS
/CS1
CS0
/UCS
/CS1
512k
SRAM
512k
SRAM
1Mb FLASH
UCS
/CS1
CS1
VCC
Programable Memory Hole. Note when CS overlap and have the same bus size, the bus size will stay constant but if the bus size parameters are different, the CPU will default to 8 bit bus.
A17
A18
A19
PG0
PG1
PG2
A17
A18
A19

Links

Link 1- COMs Power down. (Default is not fitted)
Fit to allow full power down of COM1 and COM2 driver ICs when entering power down mode. (P3.6 must be re-programmed).

Link 2 and Link 5
LK2C fitted (default) connects COM3 interrupt to INT0.

LK5A fitted (default) connects P3.0 to LED 1 output.

Non default options

LK5B connects P3.0 to COM 3 interrupt (fit link LK2B) or to IRQ4 (fit link LK2A)

Link 3 and Link 6
LK3C fitted (default) connects COM4 interrupt to INT4.

LK6A fitted (default) connects P3.1 to LED 2 output.

Non default options

LK6B connects P3.1 to COM 4 interrupt (fit link LK3B) or to IRQ 3 (fit link LK3A)

Link 4A - Dark Boot Overdrive (default is not fitted)
The BIOS setup can be modified so that the AIM104-386EX 'Dark Boot' (see appendix C). Fit Link 4A to overdrive the dark boot. This is so that the dark boot option can then be switched off in the BIOS setup. Note: This overrides all non-default BIOS settings.

Link 4B - User assigned link. (default-not fitted)
Link 4B can be user assigned. When not fitted, P1.7 is pulled high, when fitted P1.7 is pulled low.

Link 4C - ROM-DOS (default is not fitted)
If Link 4C is NOT fitted, the AIM104-386EX will automatically start ROM-DOS and boot up to the DOS 'C' prompt. Fit to boot to Arcom's TMON (Target Monitor) prompt.

Links 7,9 and 10 - Flash page control links.

	A	B
LK7	Flash PG0	A17
LK10	Flash PG1	A18
LK9	Flash PG2	A19

Factory defaults are LK7A, LK10A and LK9A. (See Memory Mapping section for Flash paging details)

Link 8
NMI source

LK8A	Connects Event Timer to NMI (default)
LK8B	Connect ‘External NMI (EXTNMI,PL1 pin 28) to NMI

Link 16 Watchdog (default fitted).
Fit to disable watchdog at startup.

Links and Options

Top view link settings for 128k paged flash application

Watchdog is software triggered.

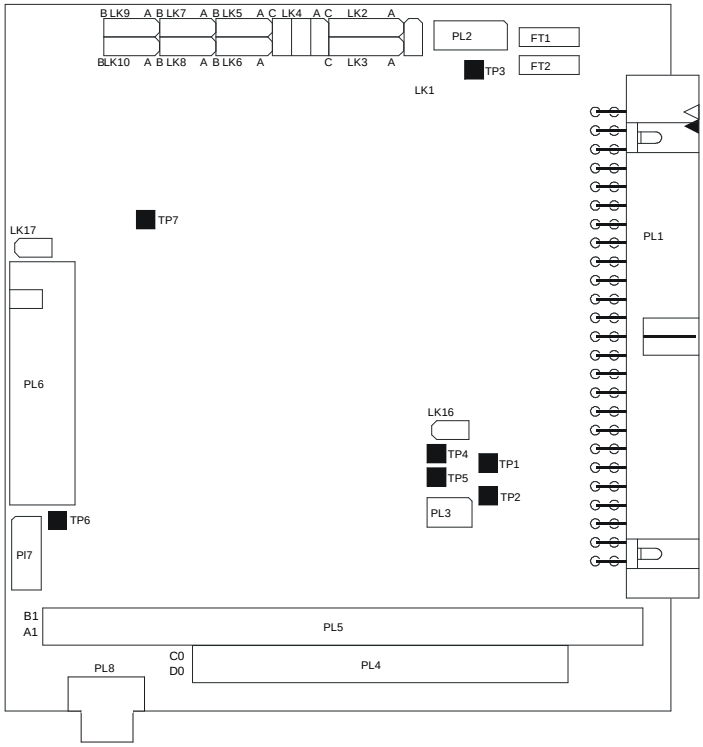

User Configuration Diagram

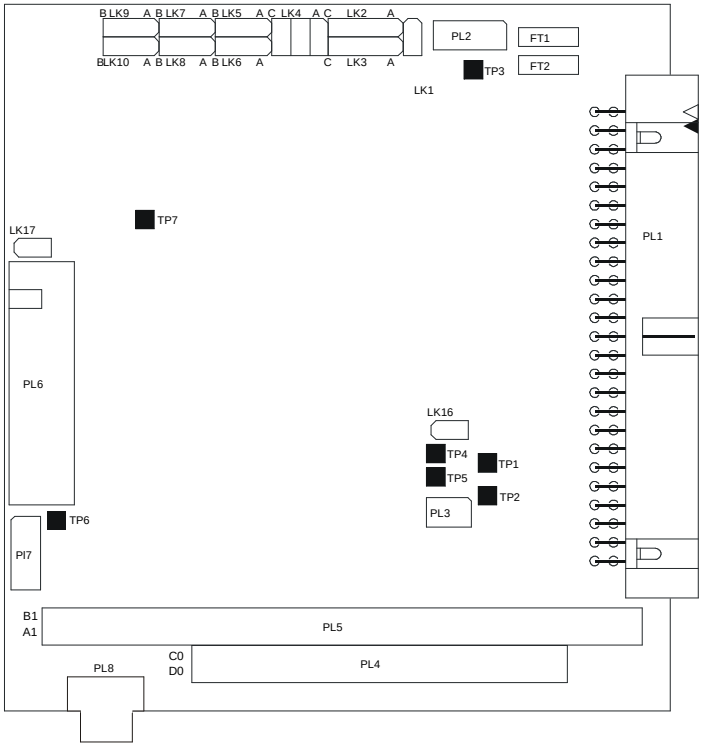

Appendix A - Connections

PL1 - Input/Output Connector : 50way right angle header

The suffix numbers refer to PC COM ports : COM1 and COM2 are on the 386EX processor
COM3 and COM4 are on the ST16C552

Connector for factory use only.

Signal	PIN	PIN	Signal
RESERVED	1	2	RESERVED
RESERVED	3	4	RESERVED
RS485.B	5	6	RS485.A
RESERVED	7	8	RESERVED
0V	9	10	SCREEN
DCD3	11	12	DSR3
RXD3	13	14	RTS3
TXD3	15	16	CTS3
DTR3	17	18	RI3
0V	19	20	SCREEN
0V	21	22	0V
VBB-	23	24	VBB+
LED1	25	26	LED2
0V	27	28	EXTNMI*
+5	29	30	+5
DCD2	31	32	DSR2
RXD2	33	34	RTS2
TXD2	35	36	CTS2
DTR2	37	38	RI2
0V	39	40	SCREEN
DCD1	41	42	DSR1
RXD1	43	44	RTS1
TXD1	45	46	CTS1
DTR1	47	48	RI1
0V	49	50	SCREEN

VBB- and VBB+ are the external battery connections for back-up of RTC & SRAM. See Arcom General Design and EMC guidelines Rev.5.

Test Point Table

Test Point	Description
TP1	Filtered GND
TP2	Filtered +5V
TP3	Logic +5V
TP4	/ADS from processor
TP5	Logic GND
TP6	Logic GND
TP7	+VBB backup voltage

PL2 - PIO Connector: 10way (2MM pitch) header

Signal	PIN	PIN	Signal
+5V	10	9	TTL output
TTL output	8	7	TTL output
TTL output	6	5	TTL input
TTL input	4	3	TTL input
TTL input	2	1	GND

PL3 - TAPFLASH connector : 6way (2mm pitch)

This connector is for factory test use only.

Signal	PIN
TDO	1
TDI	2
TMS	3
TCK	4
+5	5
0V	6

PL4 - 16-Bit PC/104 connector:40 way vertical stack-through

Pin	Row A	Row B
0	0V	0V
1	SBHE*	MEMCS16*
2	LA23	IOCS16
3	LA22	Not connected
4	LA21	Not connected
5	LA20	IRQ12
6	LA19	Not connected
7	LA18	IRQ14
8	LA17	(10K pull-up)
9	MEMR*	Not connected
10	MEMW*	(10K pull-up)
11	SD8	Not connected
12	SD9	(10k pull-up)
13	SD10	Not connected
14	SD11	(10K pull-up)
15	SD12	Not connected
16	SD13	+5V
17	SD14	Not connected
18	SD15	0V
19	Not connected	0V

PL5 - 8-Bit PC/104 connector: 64 way vertical stack-through

Pin	Row A	Row B
1	Not connected	0V
2	SD7	RESETDRV
3	SD6	+5V
4	SD5	IRQ9
5	SD4	Not connected
6	SD3	Not connected
7	SD2	-12V
8	SD1	Not connected
9	SD0	+12V
10	IOCHRDY	Not connected
11	0V	SMEMW*
12	SA19	SMEMR*
13	SA18	IOW*
14	SA17	IOR*
15	SA16	DACK3*
16	SA15	Not connected
17	SA14	DACK1*
18	SA13	Not connected
19	SA12	REFRESH
20	SA11	SYSCLK
21	SA10	IRQ7
22	SA9	IRQ6
23	SA8	IRQ5
24	SA7	IRQ4
25	SA6	IRQ3
26	SA5	DACK2*
27	SA4	Not connected
28	SA3	BALE
29	SA2	+5V
30	SA1	OSC
31	SA0	0V
32	0V	0V

PL6 - SVIF connector : 20way vertical header

Signal	PIN	PIN	Signal
0V	1	2	0V
/RD	3	4	/WR_SVIF
D0	5	6	D1
D2	7	8	D3
D4	9	10	D5
D6	11	12	D7
A0(/BLE)	13	14	A1
/SEL	15	16	/INT (NMI*)
n/c	17	18	SVIFCLK
+5	19	20	+5

PL7- ISP Connector: 10way (2mm pitch) header

This connector is for factory test use only.

Signal	PIN	PIN	Signal
GND	10	9	+5V
unused	8	7	unused
ISPCK	6	5	ISPSDI
ISP MODE	4	3	/ISPEN
ISPSDO	2	1	GND

PL8 - (Alternative) Power Connector: 4 way right angled Molex header

Pin	1	2	3	4
Signal	+5V	+12V	-12V	GND

Appendix B - IO Mapping

Expanded Address	DOS/PC Address	IO Function	Used Here
F000 - F01E	0000 - 000F	DMA/BUS-ARB	no
F020 - F021	0020 - 0021	Master INT Controller	yes
0022	0022	REMAPCFG	yes
F040 - F043	0040 - 0043	Timer/counter	no
F080 - F09B	0081 - 008B	DMA Page	no
F092	0092	PORT92	not rec'md
F0A0 - F0A1	00A0 - 00A1	Slave INT Controller	yes
F400 - F43F		CSU	yes
F480 - F48A		Sync Serial	no
F4A0 - F4A7		Refresh Controller	no
F4C0 - F4CA		386EX Watchdog	no
F4F8 - F4FF	03F8 - 03FF	386EX UART 0 (COM1)	yes
F800 - F804		Power Management	yes
F820 - F836		Device config	yes
F860 - F874		386EX parallel ports	no
F8F8 - F8FF	02F8 - 02FF	386EX UART 1 (COM2)	yes
FC08 - FC0B		On-board w'dog (STROKE)	yes (CS2)
FC0C - FC0F		SVIF port	yes (CS2)
0100 - 03FF	0100 - 03FF	PC/104 Bus IO	yes (CS3)
E4E8 - E4EF	03E8 - 03EF	COM.A (COM3)	yes (CS4)
E8E8 - E8EF	02E8 - 02EF	COM.B (COM4)	yes (CS5)
EC00 - EC0F		COM.P (P.I.O.)	yes (CS6)

IRQ - Interrupt Mappings

ICU IRQ	Availability	Function
	Bus type	
	8 16 bit	
IRQ0		Internal Timer/Counter 0
IRQ1		COM3IRQ (Link selectable)
IRQ2		Interrupt Cascade to Slave ICU
IRQ3	X X	SIOINT1(COM2)orCOM3IRQ(Link Selectable)
IRQ4	X X	SIOINT0(COM1)orCOM4IRQ(Link Selectable)
IRQ5	* *	PC/104 Bus IRQ5
IRQ6	* *	PC/104 Bus IRQ6
IRQ7	* *	PC/104 Bus IRQ7
IRQ8		COM4IRQ (Link selectable)
IRQ9	* *	PC/104 Bus IRQ9
IRQ10		Internal Timer/Counter 1
IRQ11		Internal Timer/Counter 2
IRQ12	*	PC/104 Bus IRQ12
IRQ13		-
IRQ14	*	PC/104 Bus IRQ14
IRQ15		-

* Signal is available on bus

X Signal is available on bus dependent on link settings (LK 2,3,5,6) and PC/104 bus IRQ4, 3 multiplexing with internal COM1, 2 IRQ4, 3

Appendix C - BIOS Settings

To enter this BIOS set up, hold down the <shift> and ',' (comma) keys during boot-up. The BIOS settings are displayed and can be changed in the following order:

• Display/change miscellaneous options ? Y/N

- Enable aggressive INT service checking ? Y/N
- Enable dark boot option ? Y/N
- Enable startup paradigm debug check ? Y/N
- Enable 115200 console Baud Rate ? Y/N

• Change password ? Y/N

- Enter password (default, no password)

• Save changes & exit ? Y/N

Aggressive INT Service Checking (default on)
May be used when trying to debug code. Will return error to output if unsupported BIOS routine is called by user's code.

Dark Boot Option (default off)
If this option is switched on, all INT10 output to the video controller/serial console is disabled. To switch video display back on, and/or restore the serial console the OEM interrupt support located at 0x60, sub-function 0x01 can be used. See the INT10I.C example included on the Dev Kit CD.

To change the BIOS setting back to dark boot disabled, link 4A can be fitted and the board re-booted.

Paradigm Debug Check (default off)
Enable if running Paradigm on host PC to debug code running on target. A check will be performed on startup for a Paradigm connection on COM2. If no connection is made within 5s (approx.) the AIM104-386EX will continue booting.

Enable 115200 Console Baud Rate (default off)
COM3 console baud rate is set to 115200 baud instead of the default 19200 baud.

Password Change
The password is stored in the battery backed RAM and is erased by disconnecting the external battery (if fitted).

Important: If no battery is connected to the board, the BIOS settings will not be saved if the +5V supply is switched-off or disconnected. BIOS settings will revert to default.

OEM Interrupt Support

Interrupt Handler 0x60

Function (AX)	Description
0x0100	Restore serial console
0x0200	Initialise COM3 for communications port
0x0300	Re-initialise COM3 for console port

AIM104-386EX Start-up Options

i. Power Cycle the board.

ii. When the 'Press F2...' message is displayed you may use the following keys:

8 - Gives the option to install/ignore each BIOS extension in the system. Currently there are two BIOS extensions by default. The ROM-DOS kernel BIOS extension is located at E000:0000 and is required. The FlashFx BIOS extension is located at F400:0000 and is required for access to the onboard flash drive.

5 - All BIOS extensions are skipped (The ROM-DOS O/S will then not be detected).

iii. When the 'Starting ROM-DOS...' message is displayed you may use the following keys:

'B' - (<shift> ‘b’) Allows the user to individually execute/ignore elements of CONFIG.SYS and/or AUTOEXEC.BAT.

Note: This is useful when code autostart needs to be disabled or when incorrect drivers have been added to CONFIG.SYS.

'F8' - The same functionality as 'B' but most terminal emulators will not propagate function keys over the serial link.

Appendix D - Circuit Diagrams

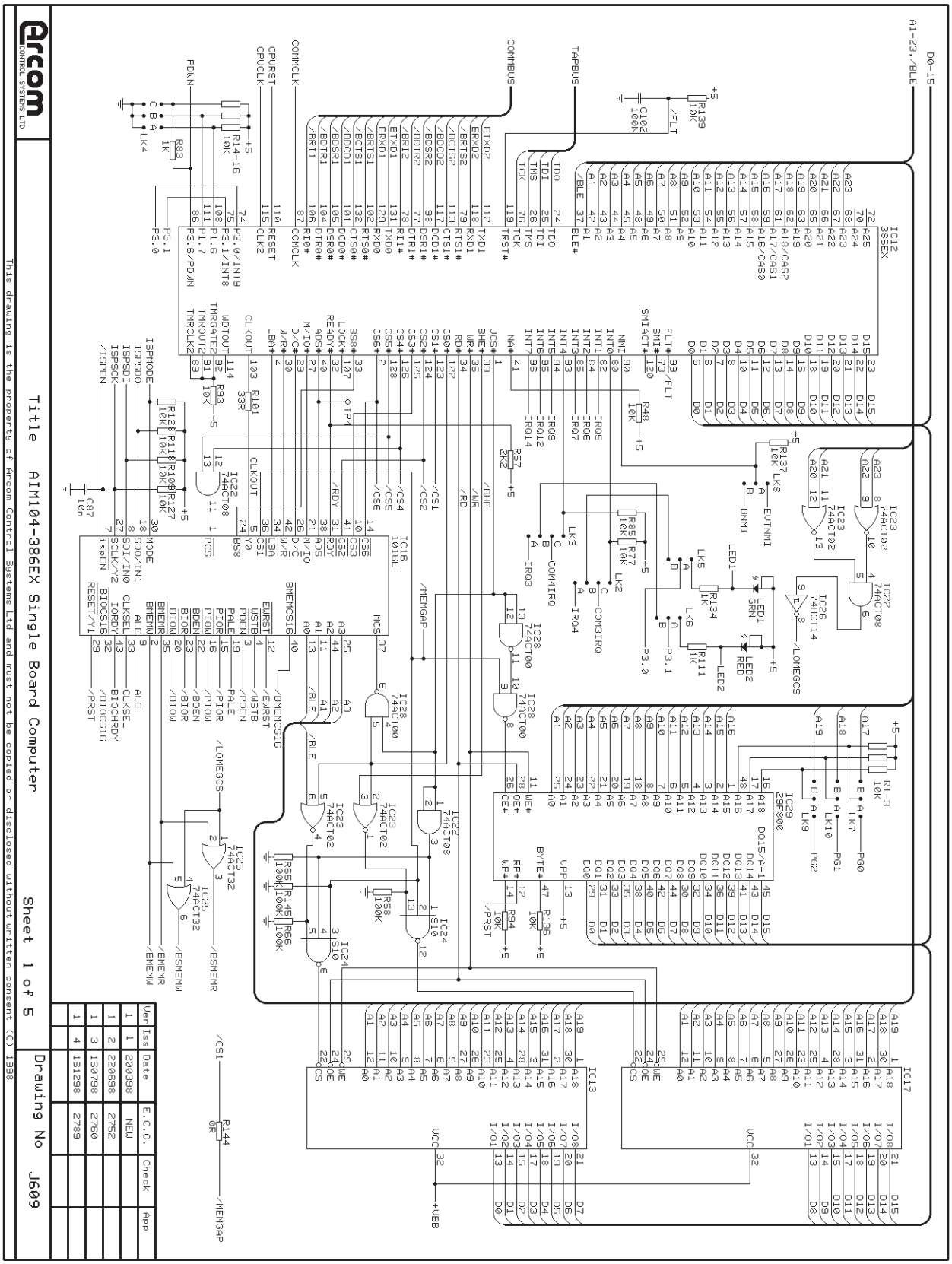

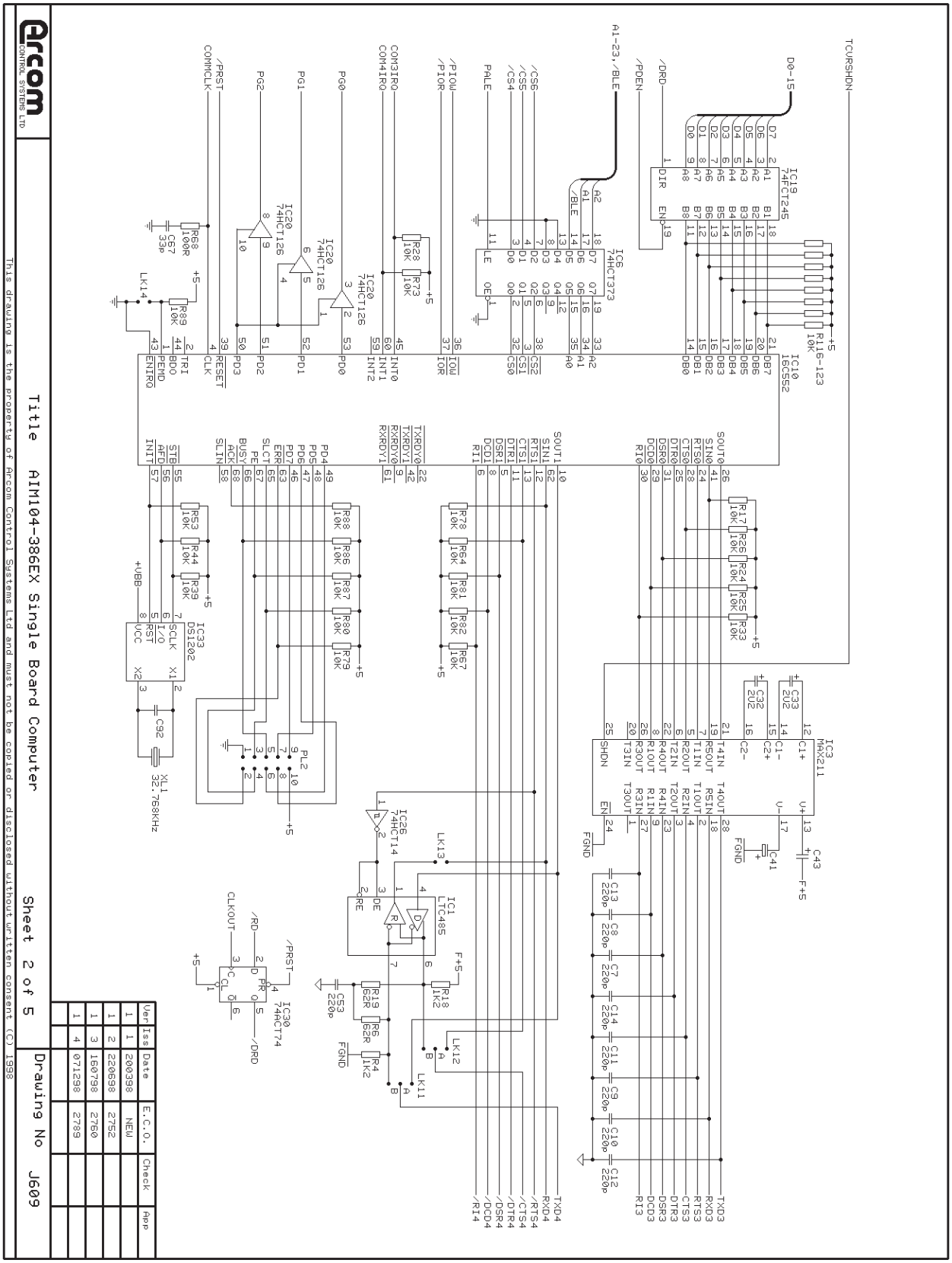
Arcom CONTROL SYSTEMS LTD
Title AIM104-386EX Single Board Computer
Sheet 2 of 5
Drawing No J609
This drawing is the property of Arcom Control Systems Ltd and must not be copied or disclosed without written consent (C) 1998
Ver Iss Date E.C.O. Check App
1 1 200398 NEW
1 2 220698 2752
1 3 160798 2760
1 4 071298 2789

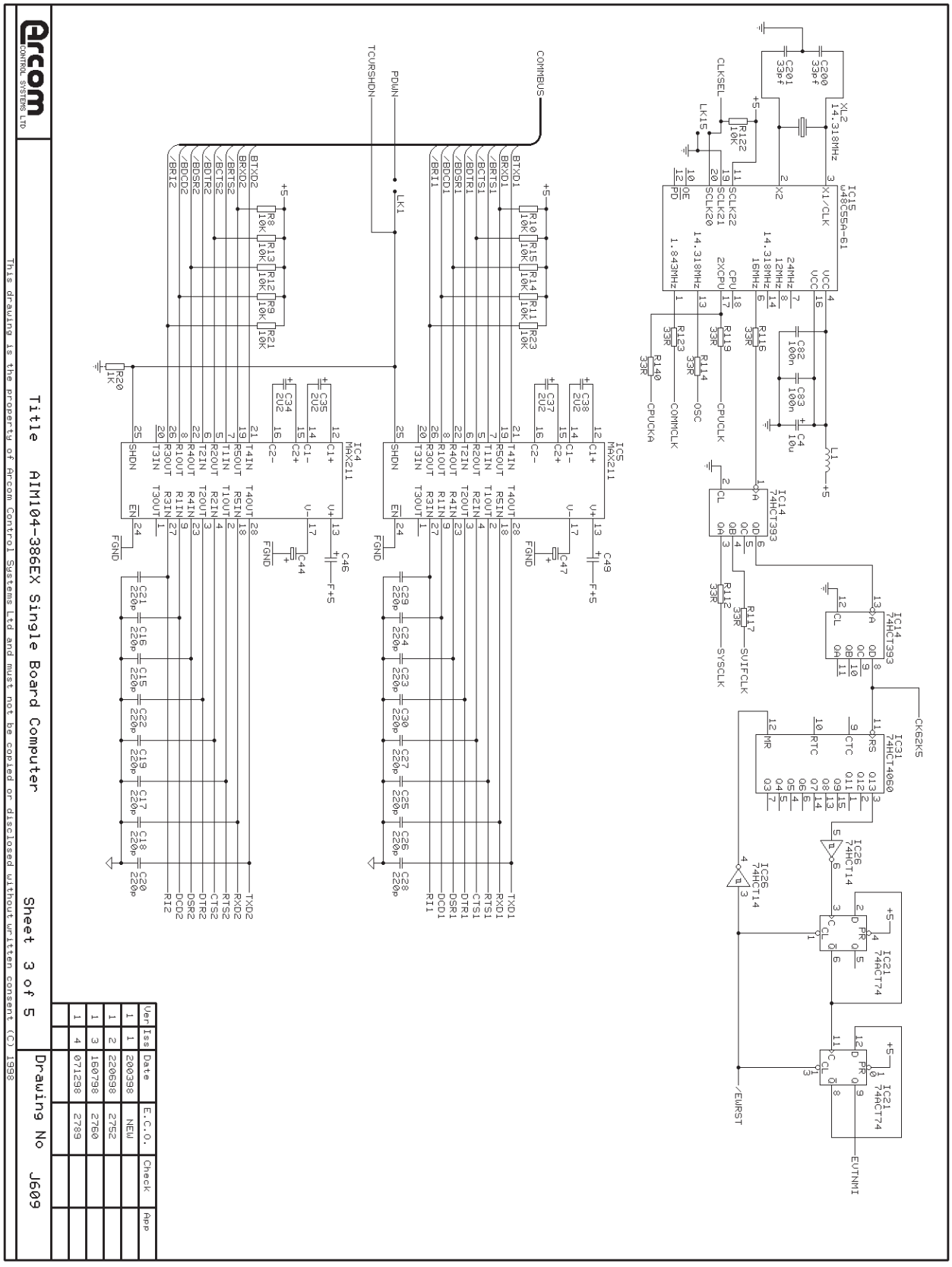
Arcom CONTROL SYSTEMS LTD
Title AIM104-386EX Single Board Computer
Sheet 3 of 5
Drawing No J609
This drawing is the property of Arcom Control Systems Ltd and must not be copied or disclosed without written consent (C) 1998
Ver Iss Date E.C.O. Check App
1 1 200398 NEW
1 2 220698 2752
1 3 160798 2760
1 4 071298 2789
IC15 w48C55A-61
IC14 74HCT393
IC31 74HCT4060
IC26 74HCT14
IC21 74ACT74
IC4 MAX211
IC5 MAX211
XL2 14.318MHz
COMMBUS
PDWN
TCVRSHDN
CLKSEL
CPUCLK
COMMCLK
OSC
CPUCKA
SVIFCLK
SYSCLK
CK62K5
EWRST
EVTNMI
FGND

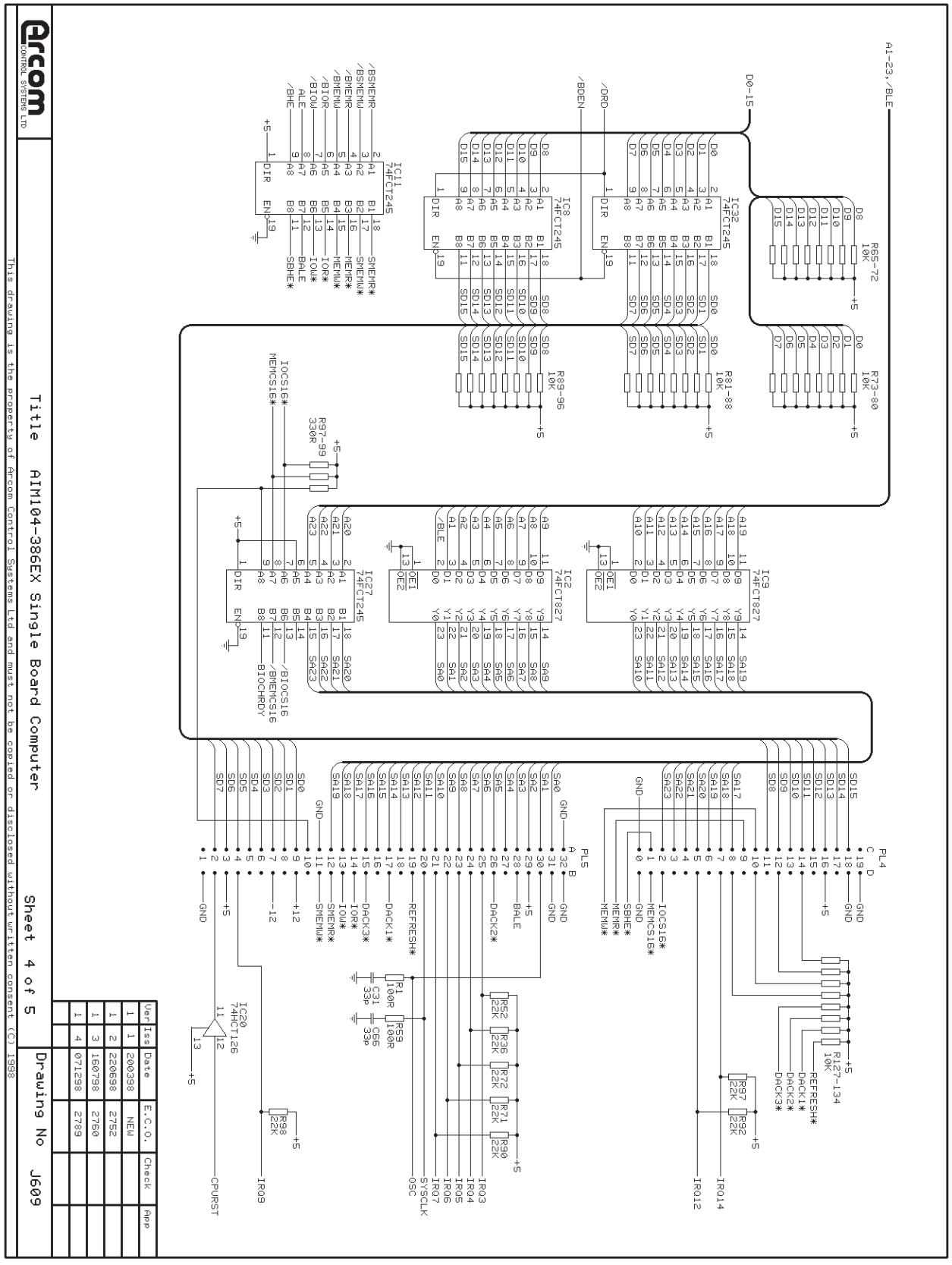
Arcom CONTROL SYSTEMS LTD
Title AIM104-386EX Single Board Computer
Sheet 4 of 5
Drawing No J609
This drawing is the property of Arcom Control Systems Ltd and must not be copied or disclosed without written consent (C) 1998
Ver Iss Date E.C.O. Check App
1 1 200398 NEW
1 2 220698 2752
1 3 160798 2760
1 4 071298 2789

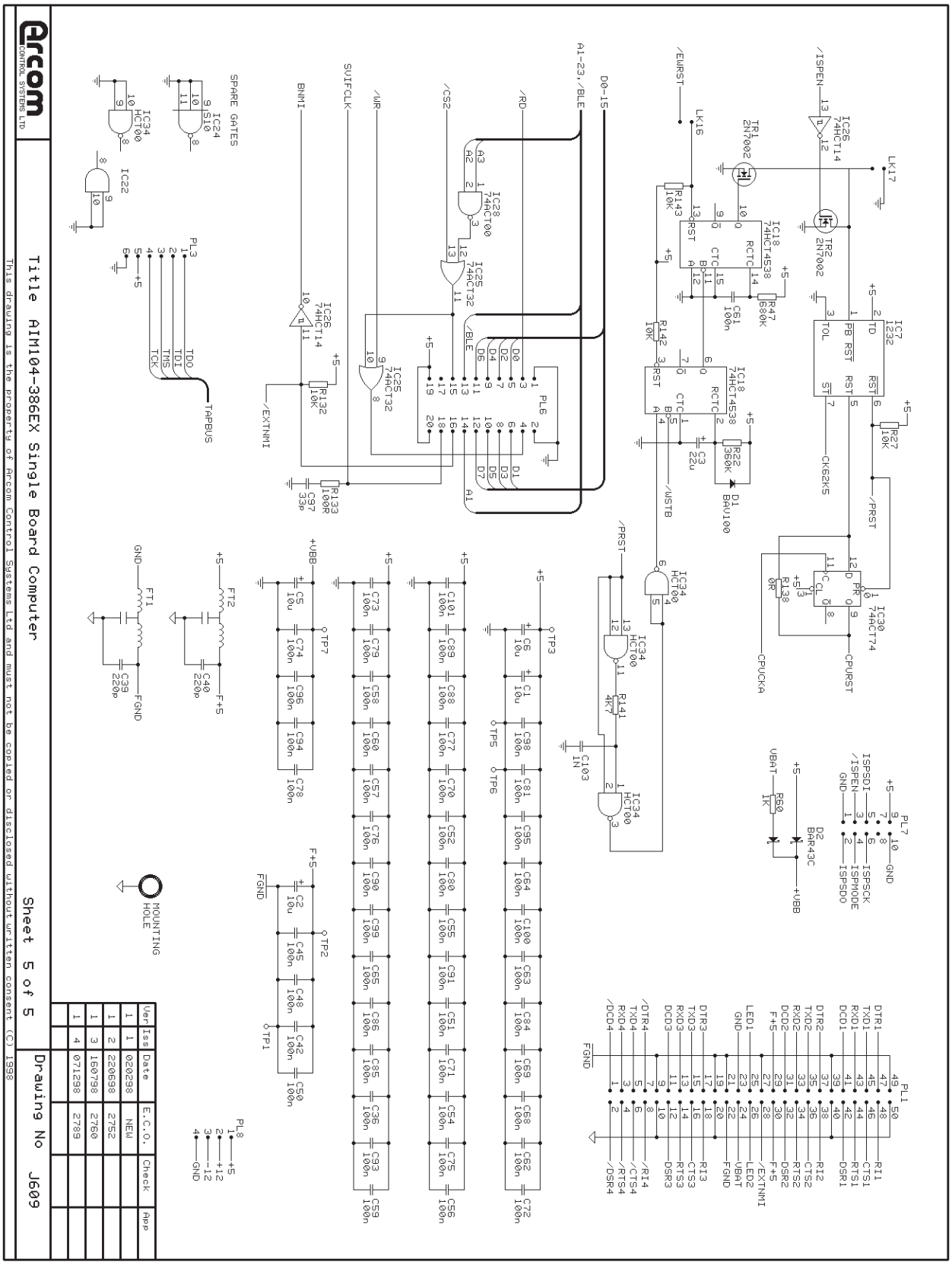
Arcom CONTROL SYSTEMS LTD
Title AIM104-386EX Single Board Computer
Sheet 5 of 5
Drawing No J609
This drawing is the property of Arcom Control Systems Ltd and must not be copied or disclosed without written consent (C) 1998
Ver Iss Date E.C.O. Check App
1 1 020298 NEW
1 2 220698 2752
1 3 160798 2760
1 4 071298 2789
SPARE GATES
IC24 74LS10
IC34 74HCT00
IC22
PL3
TDO
TDI
TMS
TCK
TAPBUS
IC26 74HCT14
/EXTNMI
BNMI
SVIFCLK
/WR
/CS2
/RD
A1-23,/BLE
D0-15
IC28 74ACT00
IC25 74ACT32
/BLE
PL6
D0 D1 D2 D3 D4 D5 D6 D7
A1
R133 100R
C97 33p
R132 10K
/ISPEN
IC26 74HCT14
/EWRST
LK16
LK17
TR1 2N7002
TR2 2N7002
IC18 74HCT4538
RCTC
CTC
RST
R143 10K
R142 10K
R47 680K
C61 100n
R22 360K
C3 22u
D1 BAV100
/WSTB
IC34 HCT00
IC7 1232
PB RST
TOL
ST
R27 10K
CK62KS
/PRST
IC30 74ACT74
CPURST
CPUCKA
R138 0R
IC34 HCT00
R141 4K7
C103 IN
VBAT
R60 1K
D2 BAR43C
+VBB
PL7
ISPSDI
/ISPEN
GND
ISPSCK
ISPMODE
ISPSDO
PL1
DTR1 TXD1 RXD1 DCD1
DTR2 TXD2 RXD2 DCD2 F+5 LED1 GND
DTR3 TXD3 RXD3 DCD3
/DTR4 TXD4 RXD4 /DCD4 FGND
RI1 CTS1 RTS1 DSR1
RI2 CTS2 RTS2 DSR2 F+5 /EXTNMI LED2 VBAT FGND
RI3 CTS3 RTS3 DSR3
/RI4 /CTS4 /RTS4 /DSR4
PL8
+5 +12 -12 GND
FT1 GND FGND C39 220p
FT2 F+5 C40 220p
MOUNTING HOLE
+VBB
F+5
FGND
TP1 TP2 TP3 TP5 TP6 TP7
C5 10u C74 100n C96 100n C94 100n C78 100n
C73 100n C79 100n C58 100n C60 100n C57 100n C76 100n C90 100n C99 100n C65 100n C86 100n C85 100n C36 100n C93 100n C59 100n
C6 10u C1 10u C98 100n C81 100n C95 100n C64 100n C100 100n C63 100n C84 100n C69 100n C68 100n C62 100n C72 100n
C101 100n C89 100n C88 100n C77 100n C70 100n C52 100n C80 100n C55 100n C91 100n C51 100n C71 100n C54 100n C75 100n C56 100n
C2 10u C45 100n C48 100n C42 100n C50 100n