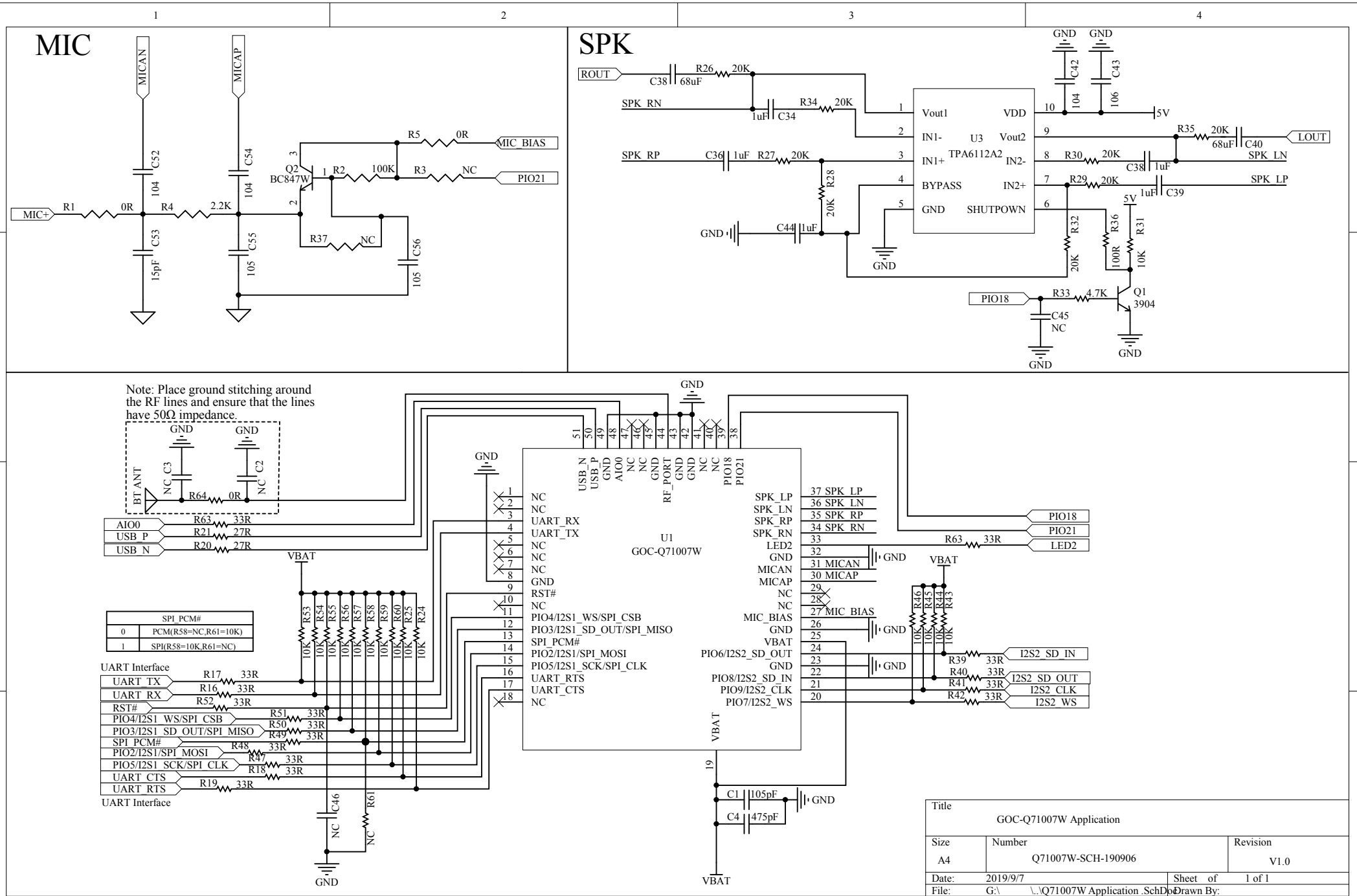
MIC
MICAN
MICAP
MIC+
R1 0R
R4 2.2K
C52 104
C53 15pF
C54 104
C55 105
Q2 BC847W
R2 100K
R3 NC
R5 0R
MIC_BIAS
PIO21
R37 NC
C56 105
SPK
ROUT
C38 68uF
R26 20K
SPK_RN
1uF C34
R34 20K
SPK_RP
C36 1uF
R27 20K
R28 20K
C44 1uF
GND
U3 TPA6112A2
Vout1
IN1-
IN1+
BYPASS
GND
VDD
Vout2
IN2-
IN2+
SHUTPOWN
C42 104
C43 106
5V
R35 20K
68uF C40
LOUT
R30 20K
C38 1uF
SPK_LN
R29 20K
1uF C39
SPK_LP
R32 20K
R36 100R
R31 10K
PIO18
R33 4.7K
Q1 3904
C45 NC
Note: Place ground stitching around the RF lines and ensure that the lines have 50Ω impedance.
B1 ANT
NC C3
R64 0R
NC C2
AIO0 R63 33R
USB_P R21 27R
USB_N R20 27R
VBAT
R53 R54 R55 R56 R57 R58 R59 R60 R25 R24 10K
SPI_PCM#
0 PCM(R58=NC,R61=10K)
1 SPI(R58=10K,R61=NC)
UART Interface
UART_TX R17 33R
UART_RX R16 33R
RST# R52 33R
PIO4/I2S1_WS/SPI_CSB R51 33R
PIO3/I2S1_SD_OUT/SPI_MISO R50 33R
SPI_PCM# R49 33R
PIO2/I2S1/SPI_MOSI R48 33R
PIO5/I2S1_SCK/SPI_CLK R47 33R
UART_CTS R18 33R
UART_RTS R19 33R
UART Interface
C46 NC
R61 NC
U1 GOC-Q71007W
USB_N USB_P GND AIO0 NC NC GND RF_PORT GND GND NC NC PIO18 PIO21
NC
NC
UART_RX
UART_TX
NC
NC
NC
GND
RST#
NC
PIO4/I2S1_WS/SPI_CSB
PIO3/I2S1_SD_OUT/SPI_MISO
SPI_PCM#
PIO2/I2S1/SPI_MOSI
PIO5/I2S1_SCK/SPI_CLK
UART_RTS
UART_CTS
NC
SPK_LP 37
SPK_LN 36
SPK_RP 35
SPK_RN 34
LED2 33
GND 32
MICAN 31
MICAP 30
NC 29
NC 28
MIC_BIAS 27
GND 26
VBAT 25
PIO6/I2S2_SD_OUT 24
GND 23
PIO8/I2S2_SD_IN 22
PIO9/I2S2_CLK 21
PIO7/I2S2_WS 20
VBAT
19
C1 105pF
C4 475pF
R63 33R
R46 R45 R44 R43 10K
R39 33R
R40 33R
R41 33R
R42 33R
I2S2_SD_IN
I2S2_SD_OUT
I2S2_CLK
I2S2_WS
Title
GOC-Q71007W Application
Size A4
Number Q71007W-SCH-190906
Revision V1.0
Date: 2019/9/7
Sheet of 1 of 1
File: G:\ \..\Q71007W Application .SchDoc
Drawn By: