AGH University of Science and Technology

Signalling and Management Systems

LIN (Local Interconnect Network)

Authors: Hubert Jabłoński
Mentor: Krzysztof Wajda

Saturday 2nd December, 2023

Contents

1 Historical overview **2**

2 INTRODUCTION **3**
2.1 LIN Bus . . . 3
2.2 Master and Slave . . . 4
2.3 Frame . . . 4
2.4 Frame formation . . . 5
2.5 Schedule Table . . . 5
2.6 LDF . . . 6
2.7 Diagnostic Frame . . . 6
2.8 Single Frame Transmission . . . 6
2.9 Multiple Frame Transmission . . . 6

3 Checksum **7**
3.1 EXAMPLE OF CHECKSUM CALCULATION . . . 7

4 SLAVE COMMUNICATION STATE DIAGRAM **8**
4.1 Initializing . . . 8
4.2 Operational . . . 8
4.3 Bus sleep mode . . . 8

5 Dictionary **9**

6 Sources **9**

1 Historical overview

LIN (Local Interconnect Network) is a cost-effective serial network protocol becous need only microcontrollers with UART tailored for communication between various components within vehicles. It operates on a single wire, facilitating communication speeds of up to 19.2 Kbit/s over a 40-meter bus length. The protocol emerged in response to the growing complexity of car technologies, as the widespread implementation of the expensive CAN bus for every vehicle component became impractical.

In the late 1990s, the LIN Consortium was established by key automakers like BMW, Volkswagen Group, Audi, Volvo Cars, and Mercedes-Benz. This collaboration, supported by networking and hardware expertise from Volcano Automotive Group and Motorola, led to the release of the fully implemented LIN version 1.3 in November 2002. Building on this foundation, version 2.0 was introduced in September 2003, expanding capabilities and incorporating provisions for additional diagnostic features.

Figure 1: LIN

2 INTRODUCTION

The workflow described above generates the complete LIN cluster interaction module and the developer only has to supply the application performing the logic function of a node. Although much of the LIN specifications assumes a software implementation of most functions, alternative realizations are promoted. In the latter case, the LIN documentation structure shall be seen as a description model only:

A node in a cluster interfaces to the physical bus wire using a frame transceiver. The frames are not accessed directly by the application; a signal based interaction layer is added in between. As a complement, a transport layer interface exists between the application and the frame handler, as depicted below.

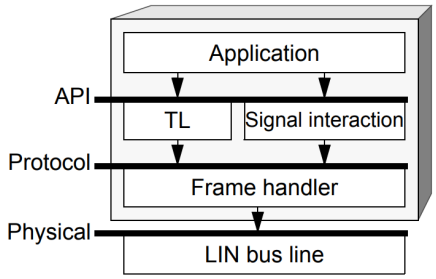

Figure 2: NODE CONCEPT

2.1 LIN Bus

The protocol specification outlines how the bus functions, including aspects like frame transportation, and defines the behavior within individual nodes, such as managing status. The focus of the specification is on a single LIN bus and its associated LIN nodes. If a node, typically a master node, is connected to multiple LIN buses, this scenario requires handling by higher layers, such as the application. Additionally, it's noteworthy that a LIN bus can accommodate up to 16 slave nodes.Network Topology: 1 master (more powerful microcontroller) and up to 16 slaves (less powerful microcontrollers), no collision detection. Typically, the master module in a LIN network is also a node in a CAN network.

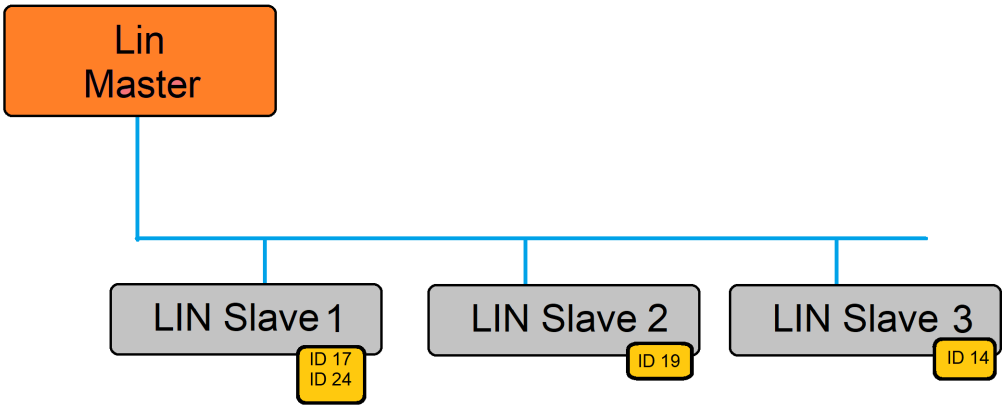

Figure 3: LIN bus with Master and three Slaves

2.2 Master and Slave

LIN Slave and LIN Master Replenishes the buffer that is sent according to the Schedule Table on the bus. In theory, it can send them at a different time, but in practice it is sent according to the Schedule Table.

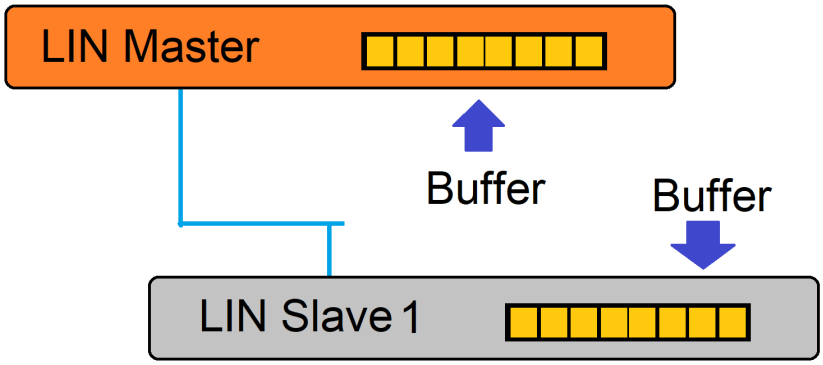

Figure 4: Example of Master and Slave role

2.3 Frame

A LIN network frame consists of a header, data fields, checksum, interframe space, frame timing structure, and interframe gap. The header contains priority, message type, and frame length information. Data fields store the actual information. The checksum is for error detection. The interframe space separates frames for synchronization. The frame timing structure regulates the duration of each frame part. The interframe gap is the time between the end of one frame and the start of the next. These components form a cohesive structure enabling efficient communication in a LIN network.

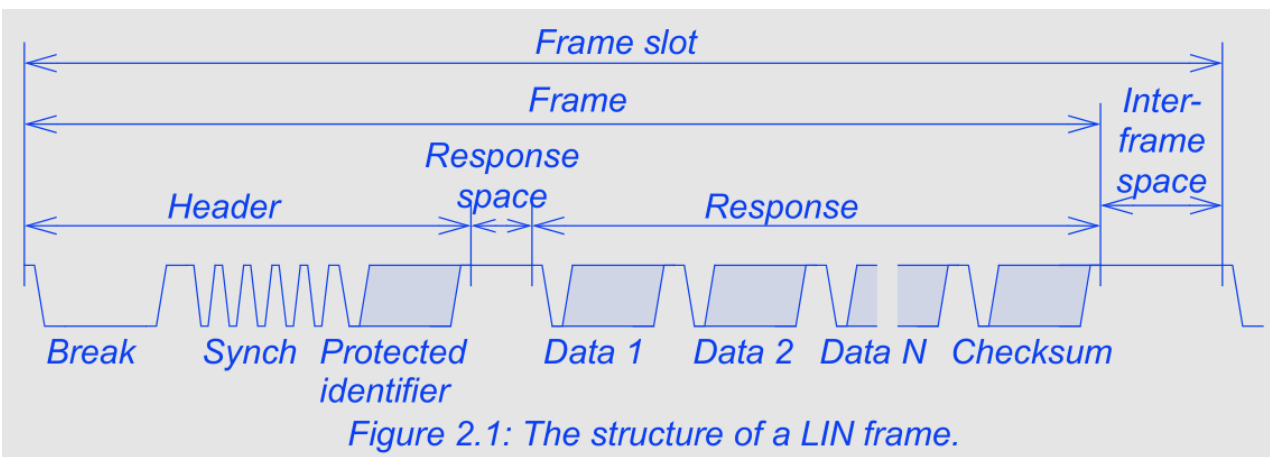

Figure 5: LIN Frame

2.4 Frame formation

On the bus, each node is assigned an individual frame or gateway identifier. The main LIN node (LIN master) initiates the transmission of the frame header, after which the node with the corresponding frame identifier adds its response to that header. As a result, a complete frame is formed.

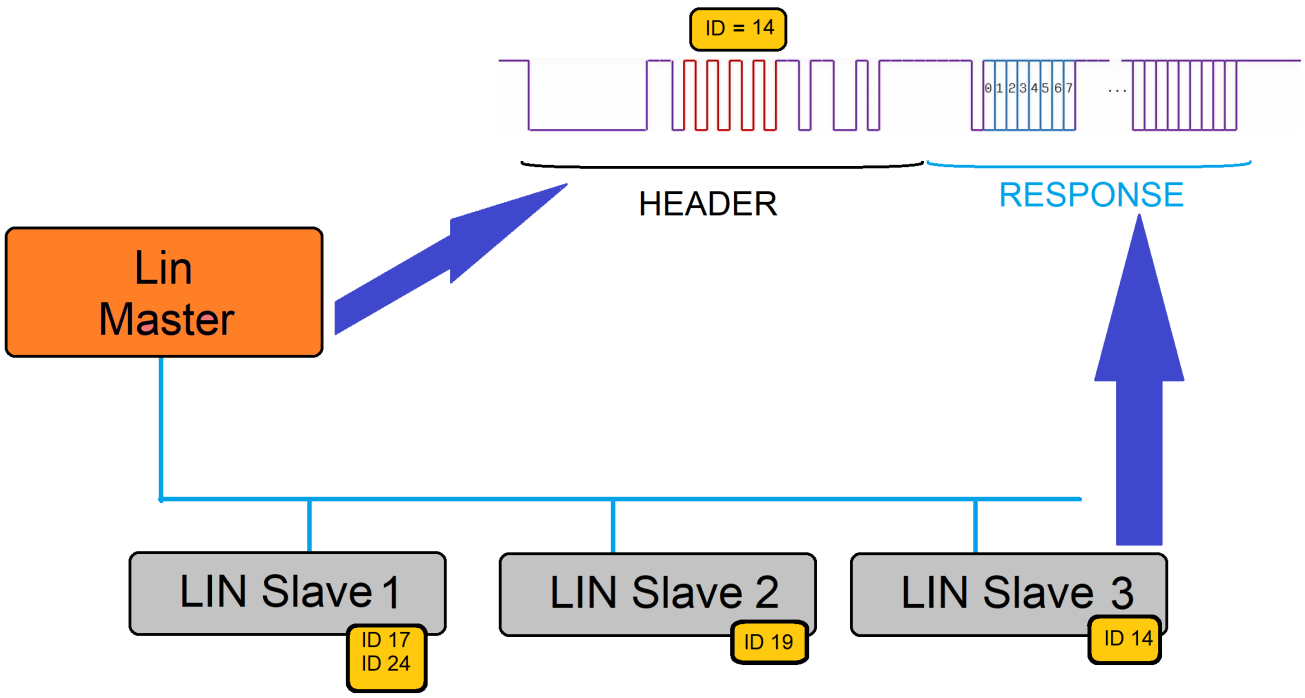

Figure 6: Example formation of a frame on LIN

2.5 Schedule Table

The schedule table in a LIN network is a tool that defines when and in what order communication events should occur. Each node on the bus is assigned unique frame or gateway identifiers. The LIN master node initiates communication by sending a header at the beginning of each time slot. The node with the corresponding frame identifier responds by transmitting its data in the specified time slot. The schedule table prevents collisions as frames are assigned to unique time slots. It is also flexible, allowing adaptation to changes in the network configuration. It synchronizes communication between nodes, ensuring efficiency and reliability. The schedule table is typically included in the LDF. Below are examples of schedule tables in a LIN network.

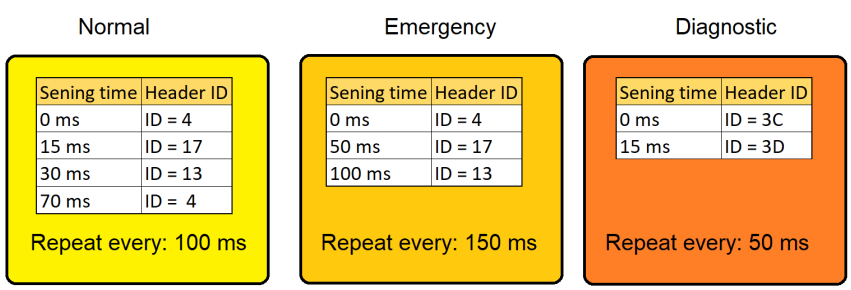

Figure 7: Example Schedule Table on LIN

2.6 LDF

LDF stands for **"LIN Description File"**. It is a file format used to describe the communication characteristics and network configuration of a LIN (Local Interconnect Network) bus. The LDF file contains information such as node attributes, frame definitions, schedule tables, and other parameters necessary for setting up and configuring a LIN network. LDF files play a crucial role in defining the communication behavior and structure of LIN networks, allowing for standardized and consistent configuration across different LIN-compatible devices and tools.

2.7 Diagnostic Frame

In LIN communication, the Request Diagnostic frame with ID 0x3C initiates diagnostic communication. It's sent by the master node to trigger specific diagnostic services. The Response Diagnostic frame with ID 0x3D is the slave node's reply, providing requested diagnostic information or acknowledging the diagnostic service. These frames play a key role in standardizing diagnostic communication in LIN networks, ensuring interoperability among devices. Common diagnostic services include reading fault codes, clearing faults, and transmitting diagnostic data.

```
3C: <NAD>  03  <D1>  <D2>  <D3>   FF    FF    FF

3D: <NAD>  10  16    <D1>  <D2>  <D3>  <D4>  <D5>
```

Figure 8: Determining the number of Bytes needed to send a long message on LIN

The number of Bytes needed to send the message is marked with a yellow circle and this information is only sent in the first frame when the master counts the number of Bytes needed. NAD is the address of the slave node to which the request is directed. default

```
3C: <NAD>  03  <D1>  <D2>  <D3>   FF    FF    FF

3D: <NAD>  10  16    <D1>  <D2>  <D3>  <D4>  <D5>
3D: <NAD>  21  <D6>  <D7>  <D8>  <D9>  <D10> <D11>
3D: <NAD>  22  <D12> <D13> <D14> <D15> <D16>  FF
```

Figure 9: LIN long diagnostic message

2.8 Single Frame Transmission

Transmission of messages up to six bytes (including SID) shall be performed via transmission of a single frame PDU (SF).

Functional addressed messages can only be SF.

2.9 Multiple Frame Transmission

Transmission of messages with more than six bytes (including SID) up to a maximum of 4095 bytes is performed via segmentation and transmission of multiple PDUs. A segmented transmission starts with a First Frame PDU (FF) and continues with multiple Consecutive Frame PDUs (CF).

3 Checksum

The checksum in a LIN network serves as a tool for detecting potential errors in transmitted data. It is a checksum calculated based on the content of the header and data fields in a communication frame. When a frame is transmitted between nodes, the sender calculates the checksum based on its content and appends it to the frame.

Upon receiving the frame, the target node also calculates the checksum based on the received data. It then compares this value with the transmitted checksum. If the values match, it signifies that the data has been successfully transmitted. Conversely, if the values differ, it suggests the possibility of errors during transmission.

The operation of the checksum in LIN enables effective error detection without overburdening communication with additional corrective information. This is crucial in the context of automotive systems where communication efficiency and reliability are paramount.

3.1 EXAMPLE OF CHECKSUM CALCULATION

Below is the checksum calculation of four bytes shown. If the frame have four data bytes or the protected identifier and three data bytes; the calculation is the same. Data = 0x4A, 0x55, 0x93, 0xE5

Action	hex	Carry	D7	D6	D5	D4	D3	D2	D1	D0
0x4A	0x4A		0	1	0	0	1	0	1	0
+0x55 =	0x9F	0	1	0	0	1	1	1	1	1
(Add Carry)	0x9F		1	0	0	1	1	1	1	1
+0x93 =	0x132	1	0	0	1	1	0	0	1	0
Add Carry	0x33		0	0	1	1	0	0	1	1
+0xE5 =	0x118	1	0	0	0	1	1	0	0	0
Add Carry	0x19		0	0	0	1	1	0	0	1
Invert	0xE6		1	1	1	0	0	1	1	0
0x19+0xE6 =	0xFF		1	1	1	1	1	1	1	1

Figure 10: Example of checksum calculation

The resulting sum is 0x19. Inversion yields the final result: checksum = 0xE6. The receiving node can easily check the consistency of the received frame by using the same addition mechanism. When the received checksum (0xE6) is added to the intermediate result (0x19) the sum shall be 0xFF

LIN Checksum Calculation and Verification: (LINK).

4 SLAVE COMMUNICATION STATE DIAGRAM

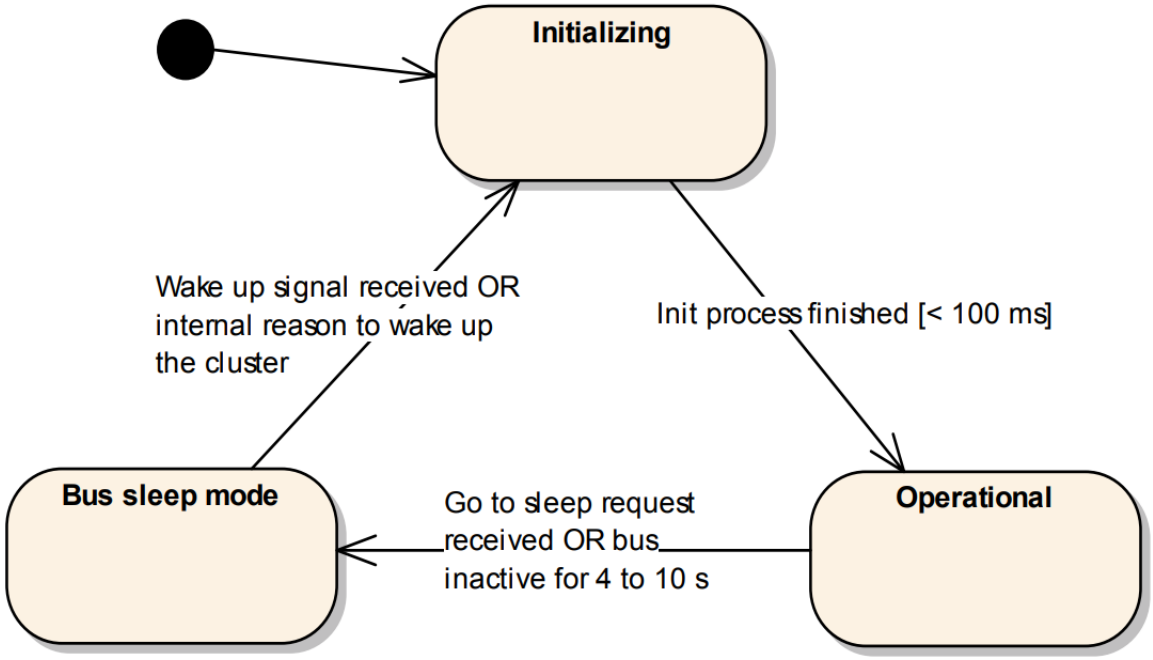

Figure 11: Slave node communication state diagram

4.1 Initializing

This state is instantaneously entered after first connection to power source, reset or wakeup. The slave node will make necessary initialization and then enter the Operational state. The initialization here refers to the LIN related initialization. A reset and wakeup may imply different initialization.

4.2 Operational

The LIN protocol behavior (transmitting and receiving frames) specified in this document only applies to the Operational state.

4.3 Bus sleep mode

The level on the bus is set to recessive. Only the wake up signal may be transmitted on the cluster.

5 Dictionary

LIN - Local Interconnect Network

UART - Universal Asynchronous Receiver-Transmitter

CAN - Controller Area Network

LDF - LIN Description File

NAD - Node Address

SID - Service Identifier

RSID - Response Service Identifier

PDU - Packet Data Unit

6 Sources

During the project, the following sources were used:

- ISO 17987-1:2016: Road vehicles – LIN – Part 1 [Access 09.12.2023]
- ISO 17987-2:2016: Road vehicles – LIN – Part 2 [Access 09.12.2023]
- ISO 17987-3:2016: Road vehicles – LIN – Part 3 [Access 09.12.2023]
- ISO 17987-4:2016: Road vehicles – LIN – Part 4 [Access 09.12.2023]
- ISO TR 17987-5:2016: Road vehicles – LIN – Part 5 [Access 09.12.2023]
- ISO 17987-6:2016: Road vehicles – LIN – Part 6 [Access 09.12.2023]
- ISO 17987-7:2016: Road vehicles – LIN – Part 7 [Access 09.12.2023]
- ISO 17987-8:2019: Road vehicles – LIN – Part 8 [Access 09.12.2023]
- https://linchecksumcalculator.machsystems.cz [Access 09.12.2023]
- https://tiny.pl/c8ljt [Access 09.12.2023]
- https://tiny.pl/c8l57 [Access 09.12.2023]
- https://tiny.pl/c8l55 [Access 09.12.2023]
- https://tiny.pl/c8lp2 [Access 09.12.2023]
- https://tiny.pl/c8lp6 [Access 09.12.2023]