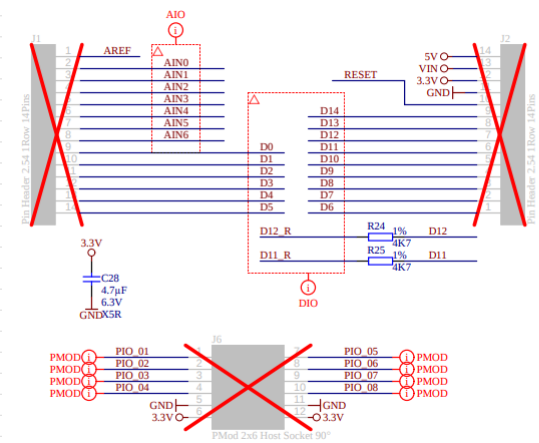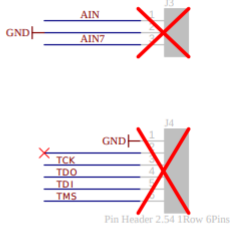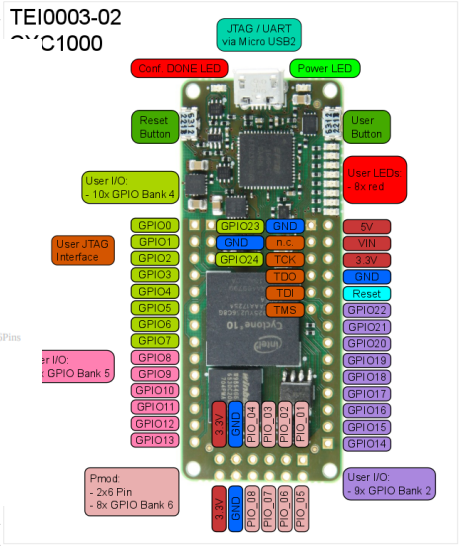Bank		Positive/negative					Lattice kit			
6	C15	p	PIO_06	**PIO_06/8**		RXIN0	pink/blue	40/41	GPIO9/10	d1/d2
6	C16	n	PIO_08	**PIO_06/8**		RXIN1	purple/gray	38/39	PIO_06/8	
	F15	p	PIO_02			RXIN2	yellow/green	44/45	gpio11/12	
	F16	n	PIO_03			**CK1IN**	red/white	42/43	GPio14/15	d6/d7
too close to CLK	J2	p	D10	GPIO18		ERXIN0	red/orange	49/50	gpio16/21	
	J1	n	D9	GPIO17		ERXIN1	black/brown	47/48	AIN0/AIN	
	R12	p	AIN0	**GPIO1**		ERXIN2	pink/green	55/56	gpio4/7	
	T12	n	AIN	**GPIO23**	even clock	**ECK1IN**	orange/brown	52/54	gpio14/15	d6/d7
	T13	p	AIN1							
	R13	n	AIN2							
	T14	p	AIN3	**GPIO4**						
	T15	n	AIN6	**GPIO7**						
	P2	p	D8	**GPIO16**						
	P1	n	D13	**GPIO21**						
	N2	p	D6	**GPIO14**						
	N1	n	D7	**GPIO15**						
	K15	p	D3	**GPIO11**						
	K16	n	D4	**GPIO12**						
	N5	p	LED7							
	N6	n	NLUSER0BTN							
	R3	p	LED4							
	T3	n	LED3							
	L15	p	D1	**GPIO9**						
	L16	n	D2	**GPIO10**						
	K2	p	D11							
	K1	n	D11_R							
	G2	p	SEN_SDI							
	G1	n	SEN_SDO							
	uart_tx	T7								
	uart_rx	R7