RCCB

Residual Current Circuit Breaker ---------- Standard_IEC61008-1

Overall and Installation Dimension(mm)

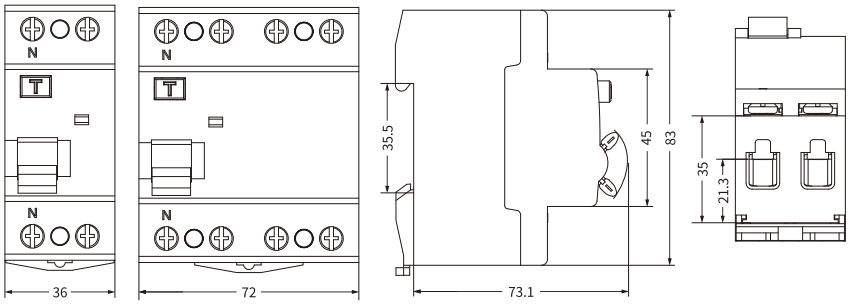

Technical Data

Standard	IEC/EN61008-1
Protection	Ground fault
Type of trip	Electro-magnetic
Type of protection (electric leakage)	AC, A, A-G / A-SI, A-S
No.of poles	2P(1P+N), 4P(3P+N) , N Pole on left
Rated voltage (Ue)	1P+N: 230/240V~, 3P+N: 400/415V~
Rated currents (In)	16,25,32,40,63,80,100A
Rated sensitivity currents (I△n)	10,30,100,300mA (10mA only for In=16-25A)
Residual current off-time under (1I△n)	A/AC≤300ms; A-G / A-SI: 10-300ms; A-S:130-500ms
Rated residual making and breaking capacity (I△m)	500A(In≤50A), 10In(In>50A)
Rated frequency	50/60Hz
Rated breaking capacity	6,000A, 10,000A
SCPD fuse	6000 10000
Rated impulse withstand voltage(1.2/50) (Uimp)	4,000V
Dielectric test voltage at Ind. Freq.for 1 min	2kV
Electrical life	2,000 Cycles
Mechanical life	4,000 Cycles
Contact position indicator	Yes
Ground fault indicator	Yes
Protection degree	IP20
Ambient temperature	-25°C to +40°C, Max.95% humidity
Terminal connection type	Cable/Pin-type busbar/Fork-type busbar
Max.terminal size for cable	35mm^2
Max.tightening torque	2.5N.m
Installation	Mounting on 35mm DIN rail
Connection	From top and bottom