RCBO -63B

RCCB with Overcurrent Protection ---------- Standard_IEC61009-1

Overall and Installation Dimension(mm)

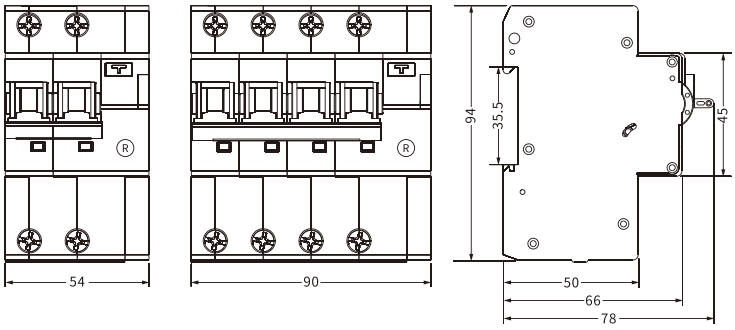

Technical Data

Standard	IEC/EN61009-1 ,IEC/EN62423
Protection	Ground fault, Overcurrent and short circuit, Over-voltage(selectable)
Type of trip	Ground fault : Electronic
	Overload and short circuit :Thermo-magnetic
Type of protection (electric leakage)	B
No.of poles	1P+N 3module , 3P+N 5module, N line with disconnected
Rated voltage (Ue)	1P+N:230/240V~,3P+N:400/415V~
Rated currents (In)	6,10,16,20,25,32,40,50,63A
Rated sensitivity currents (I△n)	30,100,300mA
Residual current off-time under (I△n)	⩽ 0.1s
Rated residual making and breaking capacity (I△m)	500A(In⩽50A), 10In(In>50A)
Rated frequency	50/60Hz
Rated breaking capacity	10,000A
Energy Limiting Class	3
Rated impulse withstand voltage(1.2/50) (Uimp)	4,000V
Dielectric test voltage at Ind. Freq.for 1 min	2kV
Thermal release characteristic	(1.13-1.45) x In
Magnetic release characteristic	B:(3-5) x In, C:(5-10) x In, D:(10-20) x In
Electrical life	4,000 Cycles
Mechanical life	10,000 Cycles
Contact position indicator	Yes
Ground fault indicator	Yes
Protection degree	IP20
Ambient temperature	-25°C to +55°C (up to 70°C at derated current capacity), Max.95% humidity
Storage temperature	-25°C to +70°C
Terminal connection type	Cable/Pin-type busbar/Fork-type busbar
Max.terminal size for cable	25mm^2
Max.tightening torque	2.5N.m
Installation	Mounting on 35mm DIN rail
Connection	From top