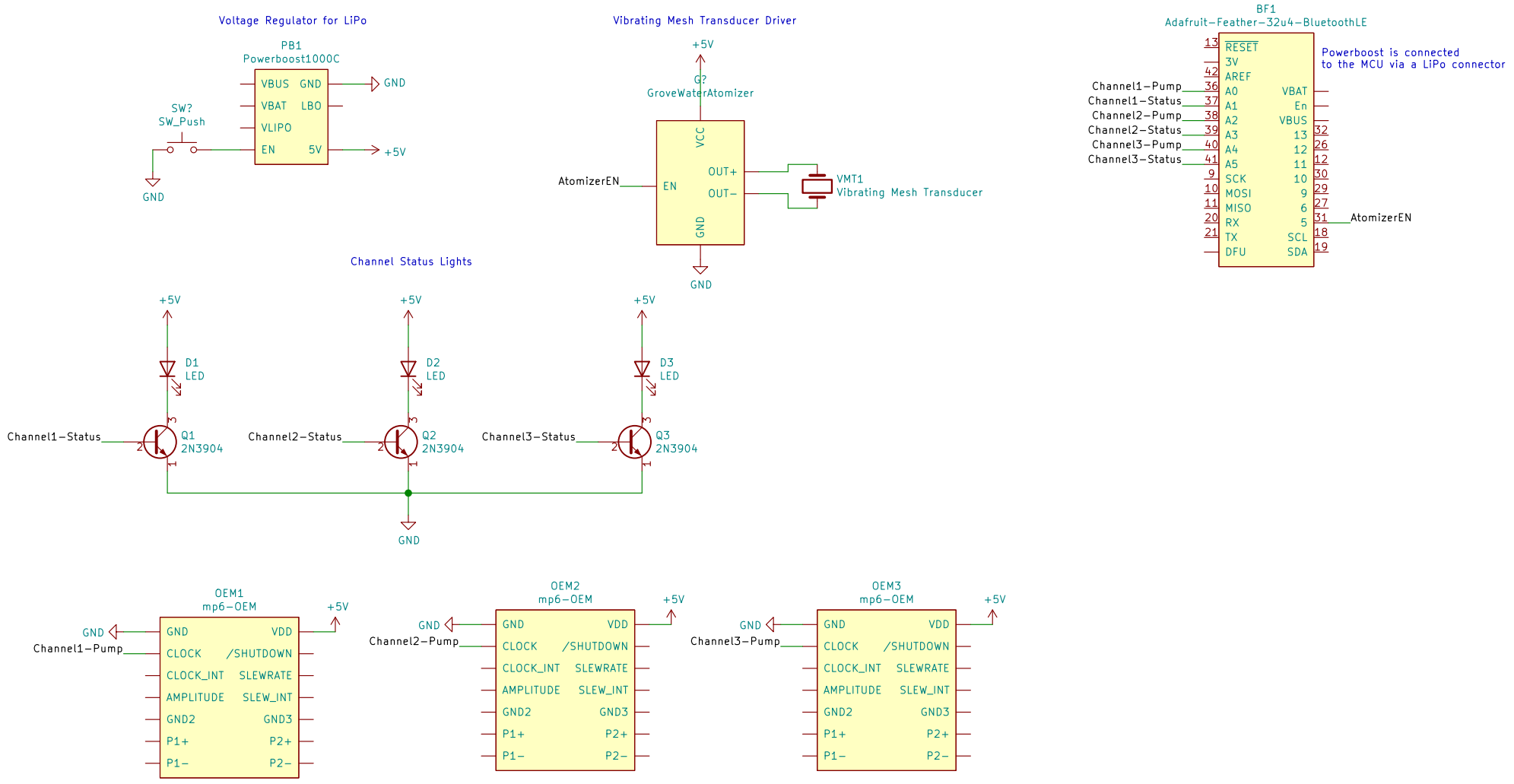

Sheet: /
File: TrigTempIII_schematic.sch

Title: Olfactory Interface

Size: A4	Date: 2020−06−12	**Rev: 1**
KiCad E.D.A. kicad (5.1.6)−1		Id: 1/1