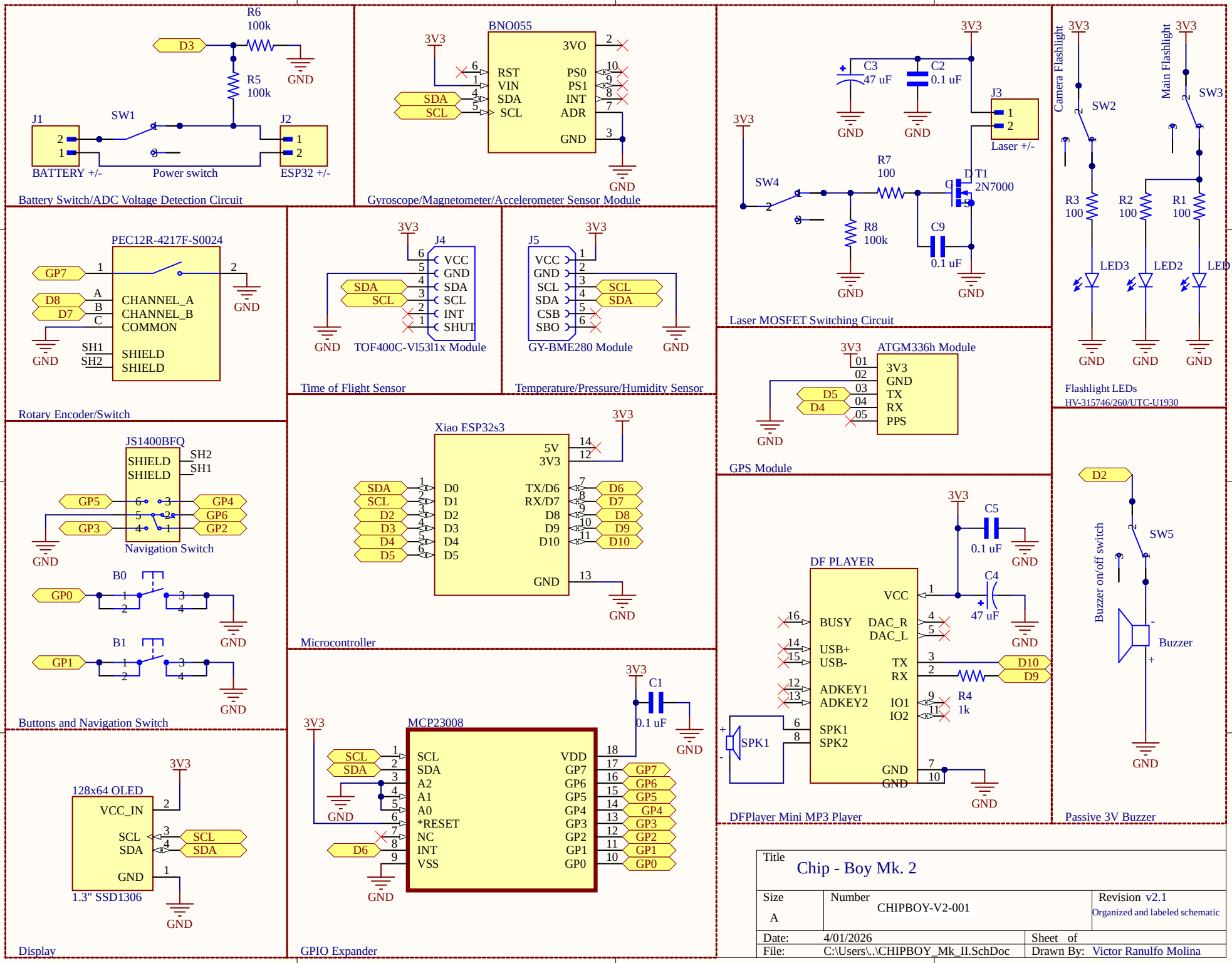
Battery Switch/ADC Voltage Detection Circuit
R6 100k
R5 100k
D3
GND
J1
SW1
J2
BATTERY +/-
Power switch
ESP32 +/-
Gyroscope/Magnetometer/Accelerometer Sensor Module
BNO055
3V3
3VO
RST
VIN
SDA
SCL
PS0
PS1
INT
ADR
GND
Laser MOSFET Switching Circuit
C3 47 uF
C2 0.1 uF
J3
Laser +/-
SW4
R7 100
R8 100k
C9 0.1 uF
T1 2N7000
Camera Flashlight
Main Flashlight
SW2
SW3
R3 100
R2 100
R1 100
LED3
LED2
LED1
Flashlight LEDs
HV-315746/260/UTC-U1930
Rotary Encoder/Switch
PEC12R-4217F-S0024
GP7
D8
D7
CHANNEL_A
CHANNEL_B
COMMON
SHIELD
SH1
SH2
Time of Flight Sensor
J4
VCC
GND
SDA
SCL
INT
SHUT
TOF400C-Vl53l1x Module
Temperature/Pressure/Humidity Sensor
J5
CSB
SBO
GY-BME280 Module
GPS Module
ATGM336h Module
3V3
GND
TX
RX
PPS
D5
D4
Buttons and Navigation Switch
JS1400BFQ
GP5
GP3
GP4
GP6
GP2
Navigation Switch
B0
B1
GP0
GP1
Microcontroller
Xiao ESP32s3
5V
D0
D1
D2
D3
D4
D5
TX/D6
RX/D7
D8
D9
D10
DFPlayer Mini MP3 Player
DF PLAYER
C5 0.1 uF
C4 47 uF
VCC
BUSY
USB+
USB-
ADKEY1
ADKEY2
SPK1
SPK2
DAC_R
DAC_L
IO1
IO2
R4 1k
Passive 3V Buzzer
Buzzer on/off switch
SW5
Buzzer
Display
128x64 OLED
VCC_IN
1.3" SSD1306
GPIO Expander
MCP23008
C1 0.1 uF
*RESET
NC
VDD
Title
Chip - Boy Mk. 2
Size
A
Number
CHIPBOY-V2-001
Revision v2.1
Organized and labeled schematic
Date: 4/01/2026
Sheet of
File: C:\Users\..\CHIPBOY_Mk_II.SchDoc
Drawn By: Victor Ranulfo Molina

Comment	Description	Designator	Footprint	LibRef	Quantity
1.3" SSD1306	This is the footprint for a 0.96" oled display with the same pinout. a 1.3" SSD1306 is the the module used in tested demos and what the design is built around, its from Amazon: https://www.amazon.com/dp/B0FL1Q1ZNG?ref=ppx_yo2ov_dt_b_fed_asin_title	128x64 OLED	MODULE_DM-OLED096-636	DM-OLED096-636	1
ATGM336H	ATGM336H GPS Module GPS & BDS Dual Mode Satellite Positioning Navigator with Antenna Replacement NEO-M8N for Meshtastic GPS Arduino Available on Amazon.com. Any similar module with identical pinout and size will work. https://www.amazon.com/dp/B0DXBHCYN5?ref=ppx_yo2ov_dt_b_fed_asin_title&th=1	ATGM336h Module	SAMTEC_MTSW-105-07-L-S-240-LL	5 pin header	1
SKHHANA010	6 x 6 x 5 mm Tactile Momentary Switch button 4 pin. Any similar push button with identical size and pinout will work., [NoValue]	B0, B1	SW_SKHHANA010	SKHHANA010	2
BNO055	IMU sensor module by Adafruit industries Part number 2472	BNO055	MODULE_2472	BNO055	1
3V Passive Buzzer	3V passive buzzer two pin through hole 0.36 inch diameter	Buzzer	CUI_CMI-1295IC-0385T	Buzzer_3V	1
0.1 uF	0.1 uF ceramic Capacitor through hole	C1, C2, C5, C9	CAPRB250W50L450T300H550	0_1uF100V_CAP_FA14X7R2A104KNU00	4
47 uF	EEE-TPV470XAV 47 uF Electrolytic Capacitor surface mount	C3, C4	CAP_EEETPV470XAV	47uF_SMD	2
DFPLAYER	DF Player Mini by DFRobot Part Number DFR0299	DF PLAYER	MODULE_DFR0299	DFPLAYER	1
BATTERY +/-	jumper pins for battery pos/neg wires.	J1	HARWIN_M20-9990246	2_pin_header	1
ESP32 +/-	jumper pins for esp32s3 pos/neg wires.	J2	HARWIN_M20-9990246	2_pin_header	1
Laser +/-		J3	HARWIN_M20-9990246	2_pin_header	1
TOF400C-VI53l1x Module	TOF400C VL53L1X Time-of-Flight (ToF) Laser Ranging Sensor Breakout 940nm ToF Distance Finder Mini Laser Distance Sensor IIC Output for Ardunio	J4	SULLINS_PPTC061LFBN-RC	PPTC061LFBNRC	1
GY-BME280 Module	GY-BME280 Module 6 pin i2c pressure temperature and humidity sensor	J5	SULLINS_PPTC061LFBN-RC	PPTC061LFBNRC	1
led_through_hole	through hole indicator LEDs Part Number HV-315746/260/UTC-U1930	LED1, LED2, LED3	LED_WP7113ID	led_through_hole	3
gpio extender	MCP23008-E/P-ND by Microchip Technology GPIO expander	MCP23008	DIP254P762X533-18	gpio extender	1
JS1400BFQ	JS1400BFQ 2 axis + 1 select Navigation Switch	Navigation Switch	SW_JS1400BFQ	nav switch	1
rotary encoder	PEC12R-4217F-S0024 Rotary encoder with push button	PEC12R-4217F-S0024	XDCR_PEC12R-4217F-S0024	rotary encoder	1
100	100 Ohm through hole resistor	R1, R2, R3, R7	RESAD640W45L370D200	resistor_through_hole	4
1k	1000 Ohm through hole resistor	R4	RESAD640W45L370D200	resistor_through_hole	1
100k	100k Ohm through hole resistor	R5, R6, R8	RESAD640W45L370D200	resistor_through_hole	3
CVS-1508	CVS-1508 Mini 8 ohm 300 mw speaker	SPK1	SPKR_CVS-1508	15mm speaker	1
Power switch	MHSS1104 Top actuated slide switch 300 mA 60V	SW1	SW_MHSS1104	switch top actuated	1
Camera Flashlight	MHSS1104 Top actuated slide switch 300 mA 60V	SW2	SW_MHSS1104	switch top actuated	1
Main Flashlight	MHSS1104 Top actuated slide switch 300 mA 60V	SW3	SW_MHSS1104	switch top actuated	1
switch top actuated		SW4	SW_MHSS1104	switch top actuated	1
Buzzer on/off switch	MHSS1104 Top actuated slide switch 300 mA 60V	SW5	SW_MHSS1104	switch top actuated	1
2N7000	2n7000 n channel 60v 200 mW Mosfet	T1	TO92	mosfet	1
	Xiao ESP32S3 Sense by Seeed Studio with Camera Module and microphone	Xiao ESP32s3	MODULE_113991254	xiao_esp32	1