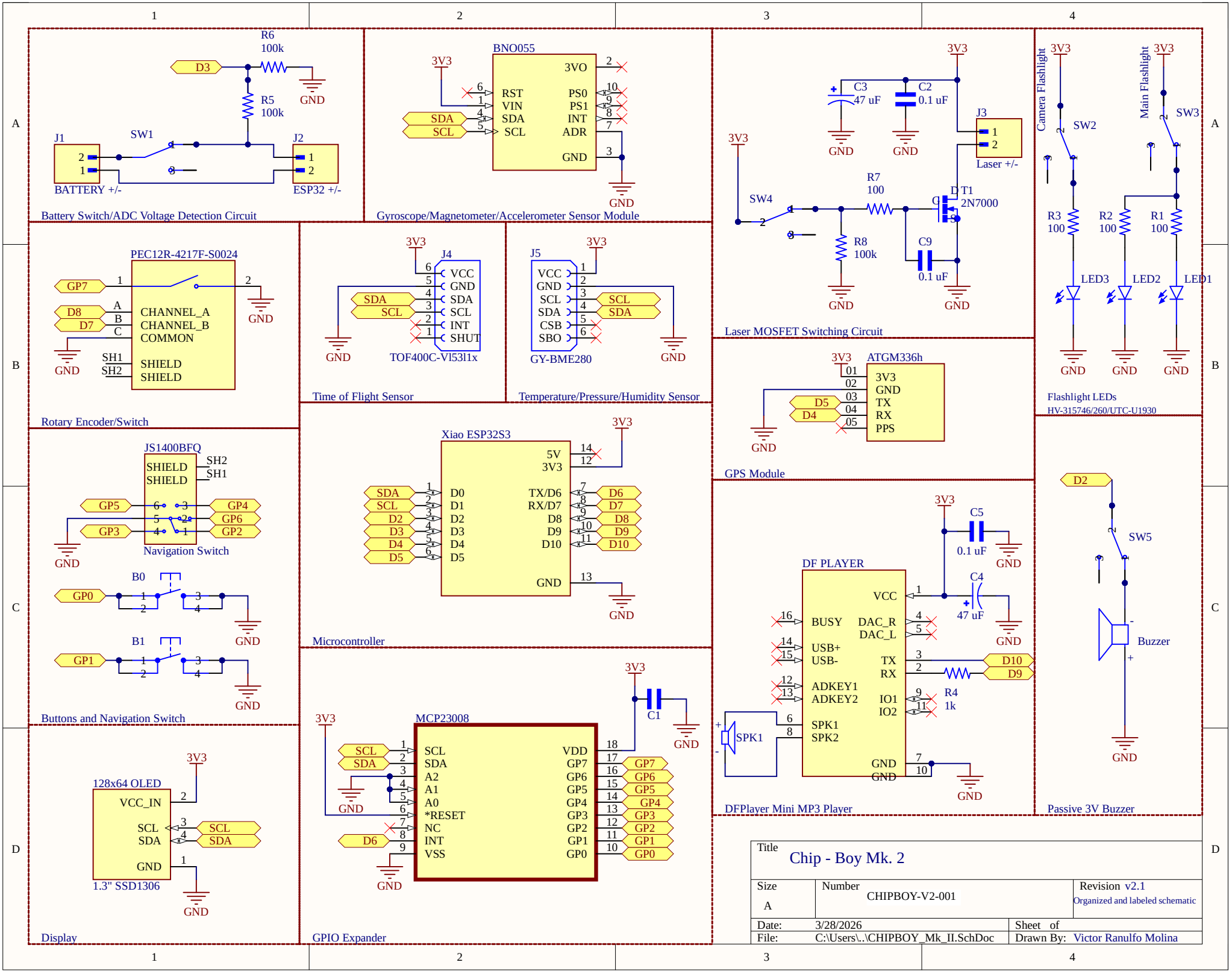
Battery Switch/ADC Voltage Detection Circuit
R6 100k
R5 100k
D3
GND
J1
SW1
J2
BATTERY +/-
ESP32 +/-
Gyroscope/Magnetometer/Accelerometer Sensor Module
BNO055
3V3
3VO
RST
VIN
SDA
SCL
PS0
PS1
INT
ADR
GND
Laser MOSFET Switching Circuit
C3 47 uF
C2 0.1 uF
J3
Laser +/-
SW4
R7 100
R8 100k
C9 0.1 uF
T1 2N7000
Camera Flashlight
Main Flashlight
SW2
SW3
R3 100
R2 100
R1 100
LED3
LED2
LED1
Flashlight LEDs
HV-315746/260/UTC-U1930
Rotary Encoder/Switch
PEC12R-4217F-S0024
GP7
D8
D7
CHANNEL_A
CHANNEL_B
COMMON
SHIELD
SH1
SH2
Time of Flight Sensor
J4
VCC
GND
SDA
SCL
INT
SHUT
TOF400C-VI53I1x
Temperature/Pressure/Humidity Sensor
J5
CSB
SBO
GY-BME280
GPS Module
ATGM336h
TX
RX
PPS
D5
D4
Buttons and Navigation Switch
JS1400BFQ
Navigation Switch
GP5
GP3
GP4
GP6
GP2
B0
B1
GP0
GP1
Microcontroller
Xiao ESP32S3
5V
D0
D1
D2
D3
D4
D5
TX/D6
RX/D7
D8
D9
D10
DFPlayer Mini MP3 Player
DF PLAYER
C5 0.1 uF
C4 47 uF
BUSY
USB+
USB-
ADKEY1
ADKEY2
DAC_R
DAC_L
IO1
IO2
SPK1
SPK2
R4 1k
Passive 3V Buzzer
SW5
Buzzer
Display
128x64 OLED
VCC_IN
1.3" SSD1306
GPIO Expander
MCP23008
C1
A2
A1
A0
*RESET
NC
VDD
GP7
GP6
GP5
GP4
GP3
GP2
GP1
GP0
Title
Chip - Boy Mk. 2
Size
A
Number
CHIPBOY-V2-001
Revision v2.1
Organized and labeled schematic
Date: 3/28/2026
Sheet of
File: C:\Users\..\CHIPBOY_Mk_II.SchDoc
Drawn By: Victor Ranulfo Molina

Comment	Description	Designator	Footprint	LibRef	Quantity
1.3" SSD1306		128x64 OLED	MODULE_DM-OLED096-636	DM-OLED096-636	1
ATGM336H		ATGM336h	SAMTEC_MTSW-105-07-L-S-240-LL	5 pin header	1
SKHHANA010		B0, B1	SW_SKHHANA010	SKHHANA010	2
BNO055		BNO055	MODULE_2472	BNO055	1
		Buzzer	CUI_CMI-1295IC-0385T	Buzzer_3V	1
0_1uF100V_CAP_FA14X7R2A104KNU00		C1	CAPRB250W50L450T300H550	0_1uF100V_CAP_FA14X7R2A104KNU00	1
0.1 uF		C2, C5, C9	CAPRB250W50L450T300H550	0_1uF100V_CAP_FA14X7R2A104KNU00	3
47 uF		C3, C4	CAP_EEETPV470XAV	47uF_SMD	2
DFPLAYER		DF PLAYER	MODULE_DFR0299	DFPLAYER	1
J5		GY-BME280	SULLINS_PPTC061LFBN-RC	PPTC061LFBNRC	1
BATTERY +/-		J1	HARWIN_M20-9990246	2_pin_header	1
ESP32 +/-		J2	HARWIN_M20-9990246	2_pin_header	1
Laser +/-		J3	HARWIN_M20-9990246	2_pin_header	1
led_through_hole		LED1, LED2, LED3	LED_WP7113ID	led_through_hole	3
gpio extender		MCP23008	DIP254P762X533-18	gpio extender	1
JS1400BFQ		Navigation Switch	SW_JS1400BFQ	nav switch	1
rotary encoder		PEC12R-4217F-S0024	XDCR_PEC12R-4217F-S0024	rotary encoder	1
100		R1, R2, R3, R7	RESAD640W45L370D200	resistor_through_hole	4
1k		R4	RESAD640W45L370D200	resistor_through_hole	1
100k		R5, R6, R8	RESAD640W45L370D200	resistor_through_hole	3
15mm speaker		SPK1	SPKR_CVS-1508	15mm speaker	1
switch top actuated		SW1, SW4, SW5	SW_MHSS1104	switch top actuated	3
Camera Flashlight		SW2	SW_MHSS1104	switch top actuated	1
Main Flashlight		SW3	SW_MHSS1104	switch top actuated	1
2N7000		T1	TO92	mosfet	1
J4		TOF400C-VI53I1x	SULLINS_PPTC061LFBN-RC	PPTC061LFBNRC	1
		Xiao ESP32S3	MODULE_113991254	xiao_esp32	1