390k

300k

0.022uF

1.44M

51

450k
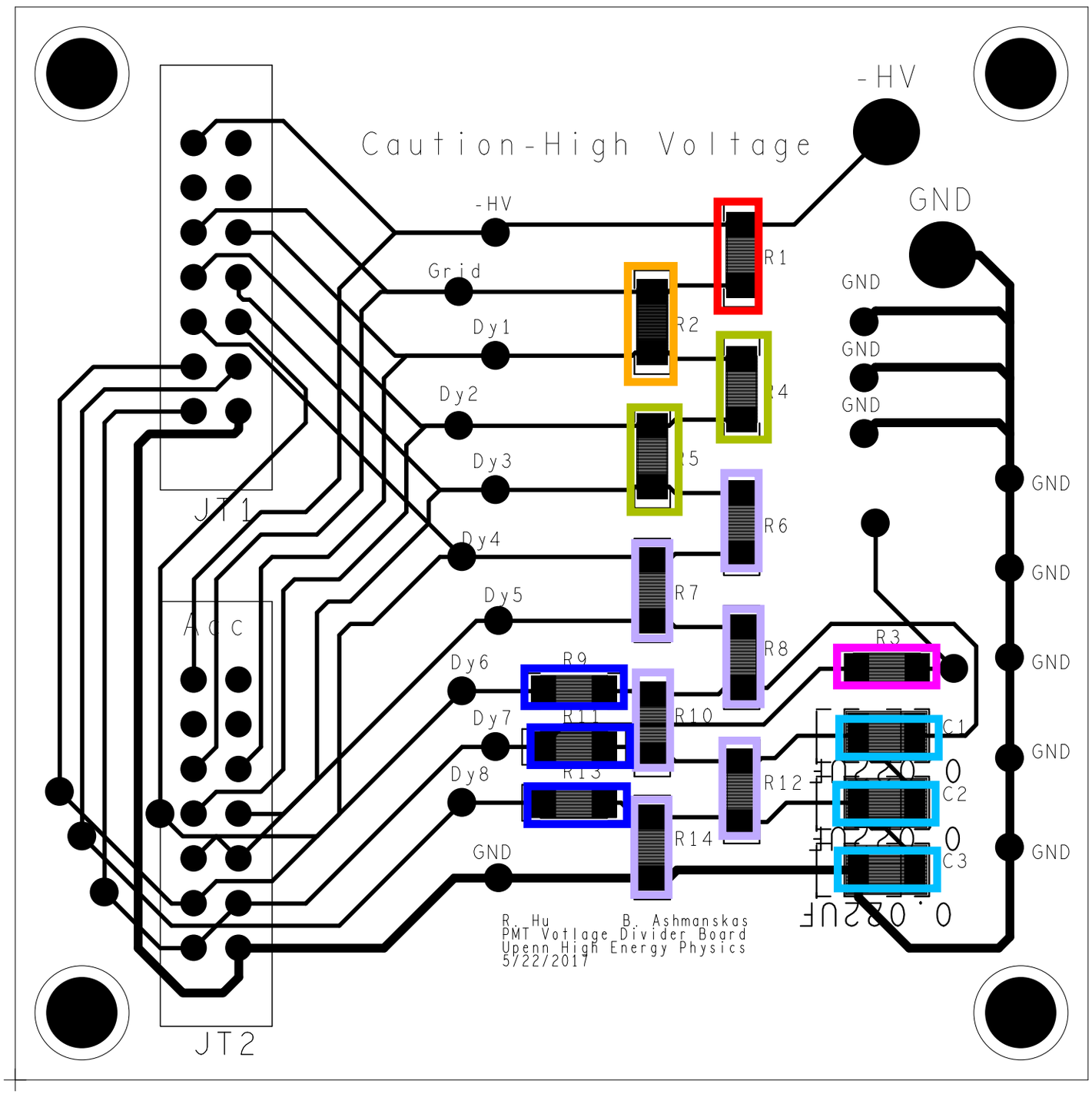
1M