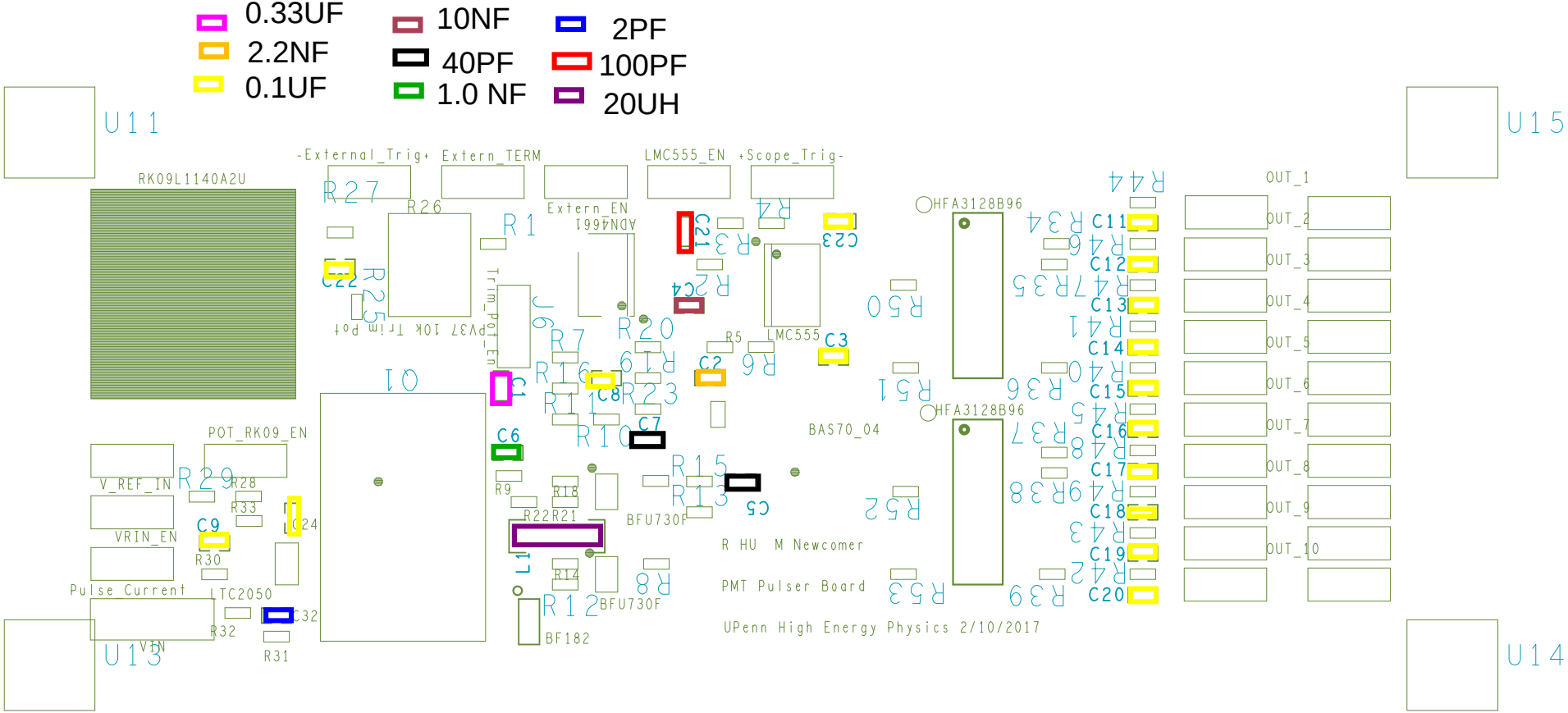
0.33UF
2.2NF
0.1UF
10NF
40PF
1.0 NF
2PF
100PF
20UH
U11
U15
U13
U14
RK09L1140A2U
-External_Trig+
Extern_TERM
LMC555_EN
+Scope_Trig-
Extern_EN
ADN4661
Trim_Pot_En
PV37 10k Trim Pot
LMC555
HFA3128B96
HFA3128B96
BAS70_04
BFU730F
BFU730F
BF182
POT_RK09_EN
V_REF_IN
VRIN_EN
Pulse_Current
TC2050
VIN
OUT_1
OUT_2
OUT_3
OUT_4
OUT_5
OUT_6
OUT_7
OUT_8
OUT_9
OUT_10
R HU M Newcomer
PMT Pulser Board
UPenn High Energy Physics 2/10/2017