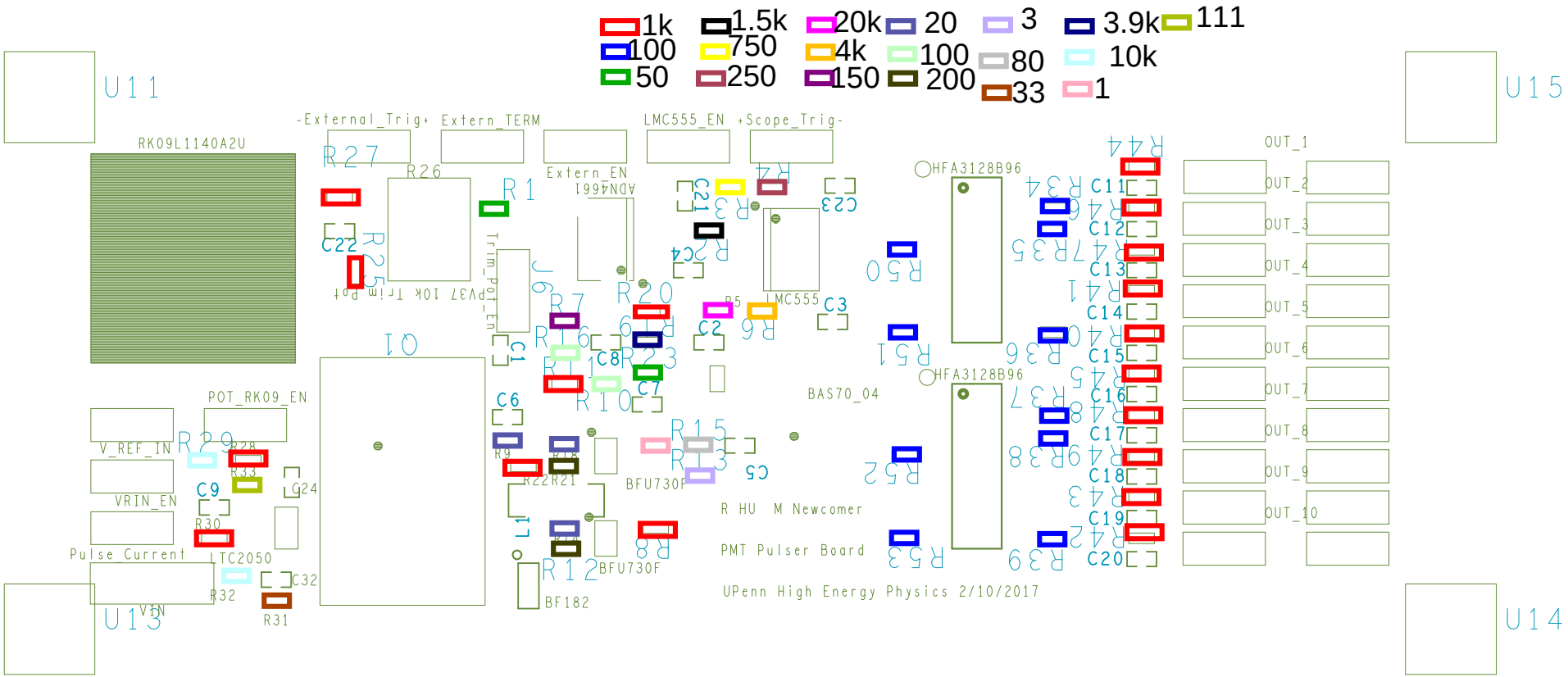
1k
1.5k
20k
20
3
3.9k
111
100
750
4k
100
80
10k
50
250
150
200
33
1
U11
U15
U13
U14
RK09L1140A2U
-External_Trig+
Extern_TERM
LMC555_EN
+Scope_Trig-
Extern_EN
ADN4661
HFA3128B96
HFA3128B96
OUT_1
OUT_2
OUT_3
OUT_4
OUT_5
OUT_6
OUT_7
OUT_8
OUT_9
OUT_10
POT_RK09_EN
V_REF_IN
VRIN_EN
Pulse_Current
VIN
LTC2050
BAS70_04
BFU730F
BFU730F
BF182
LMC555
R HU M Newcomer
PMT Pulser Board
UPenn High Energy Physics 2/10/2017