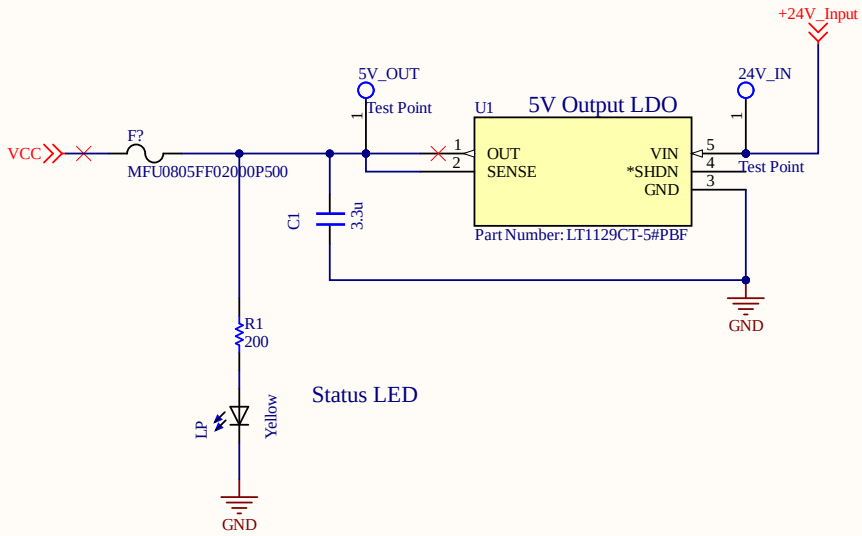

Title *			
Size: A4	Number:*	Revision:*	
Date: 12/29/2019	Time: 5:14:26 PM	Sheet * of *	
File: C:\Users\gurta\Desktop\UW Seattle\19-20 Husky Robotics\REV 1\Chassis-Power-Distro-PCB-A-2019-2020\Local_Power_5V			

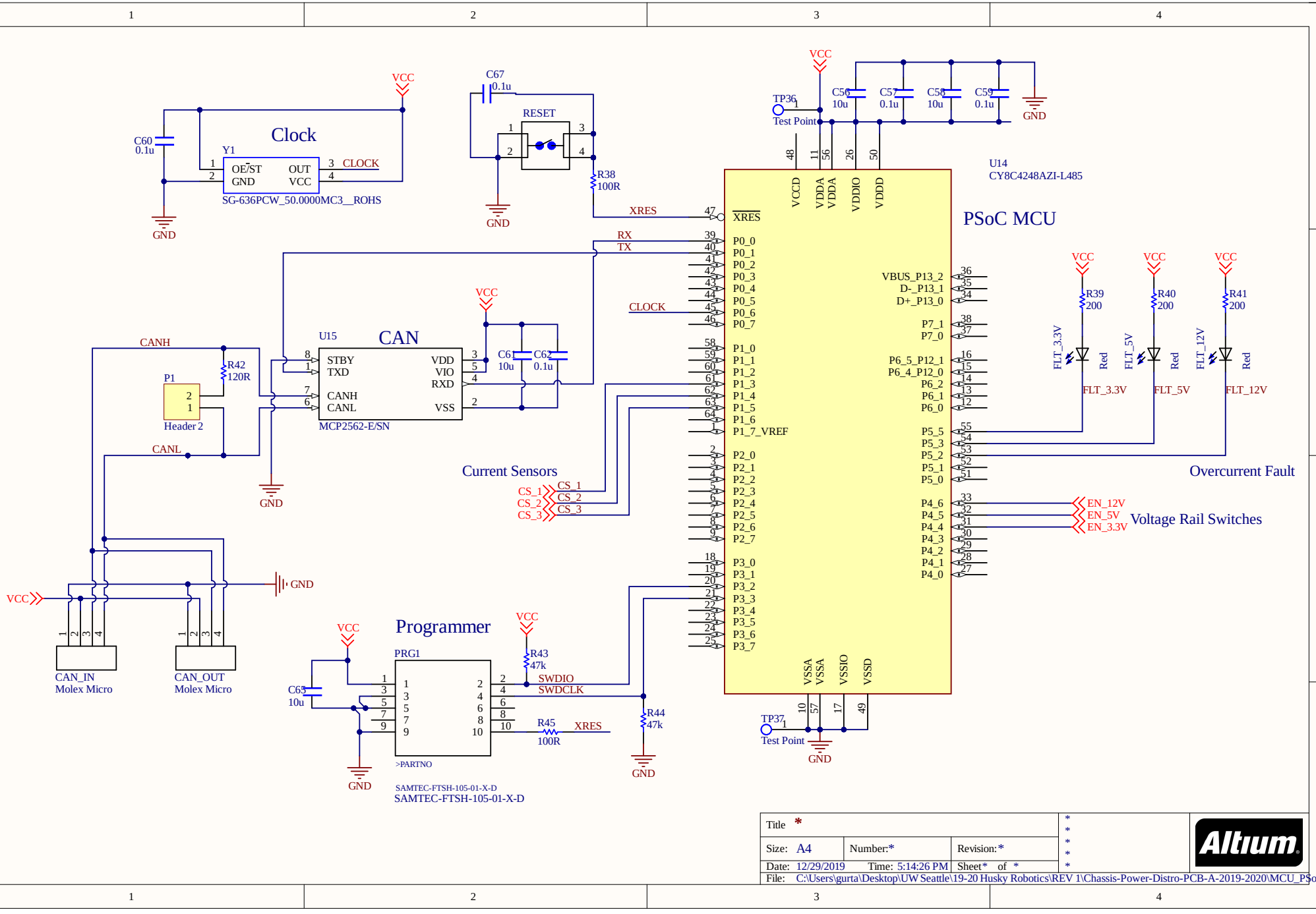

Title *			
Size: A4	Number:*	Revision:*	
Date: 12/29/2019	Time: 5:14:26 PM	Sheet* of *	
File: C:\Users\gurta\Desktop\UW Seattle\19-20 Husky Robotics\REV 1\Chassis-Power-Distro-PCB-A-2019-2020\MCU_PSoC.Schl			

Altium

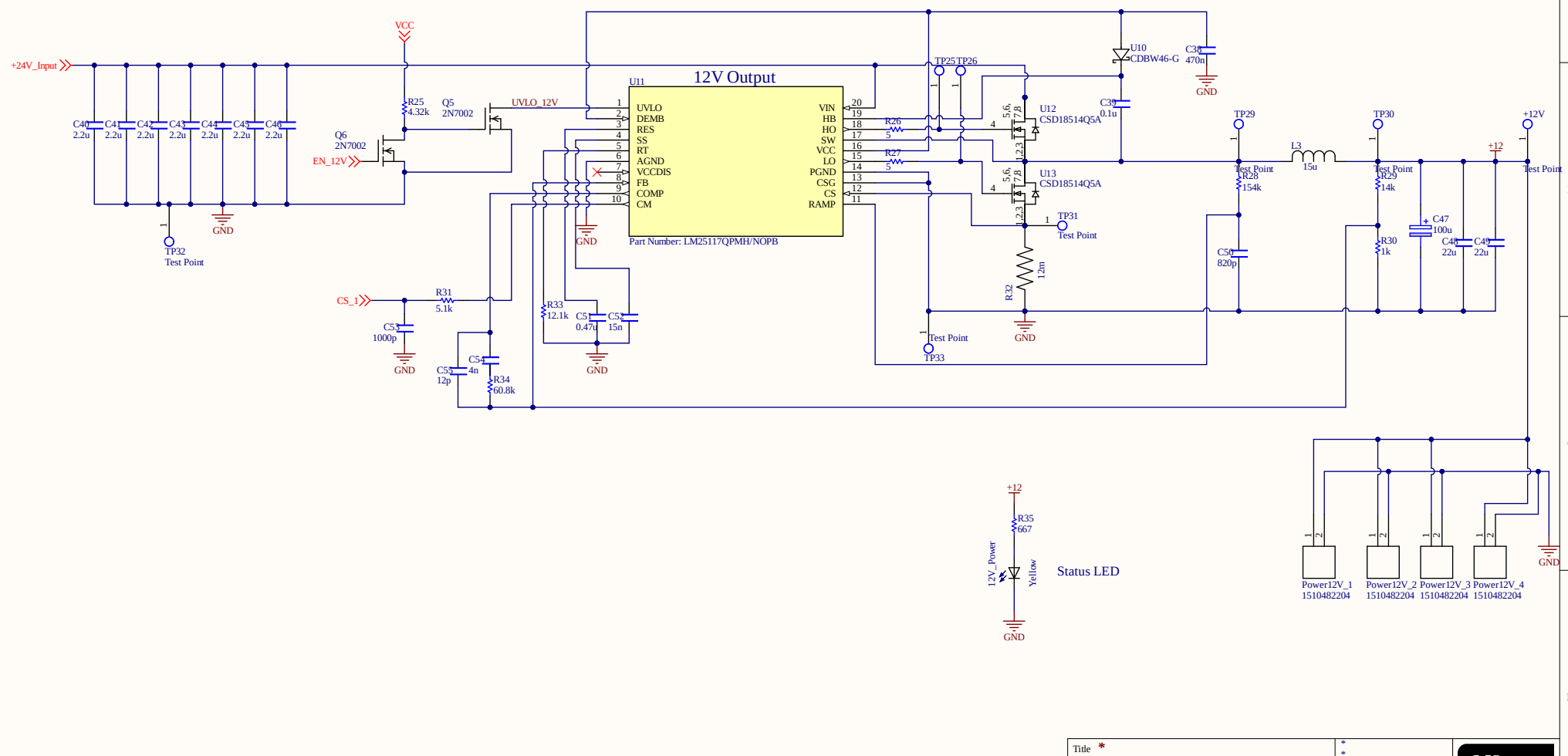

Title *			
Size: B	Number:*	Revision:*	
Date: 12/29/2019	Time: 5:14:27 PM	Sheet * of *	
File: C:\Users\gurta\Desktop\UW Seattle\19-20 Husky Robotics\REV 1\Chassis-Power-Distro-PCB-A-2019-2020\Power_12V.SchDo			

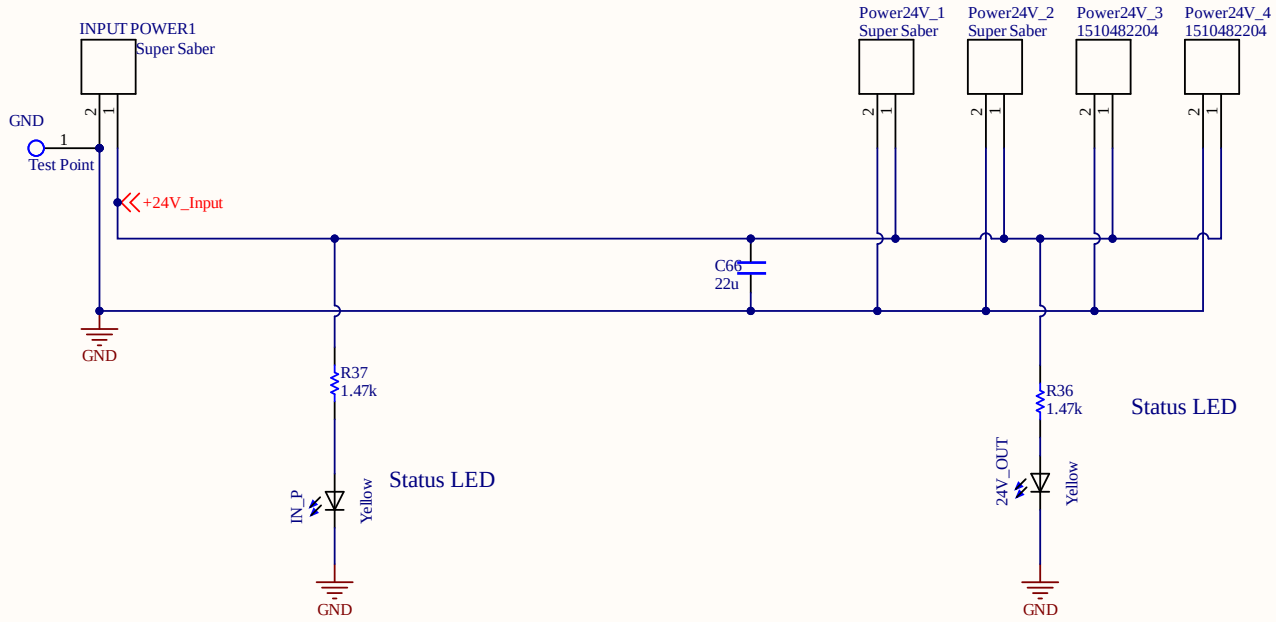

Title *			
Size: A4	Number:*	Revision:*	
Date: 12/29/2019	Time: 5:14:27 PM	Sheet * of *	
File: C:\Users\gurta\Desktop\UW Seattle\19-20 Husky Robotics\REV 1\Chassis-Power-Distro-PCB-A-2019-2020\Power_24V.SchDoc			

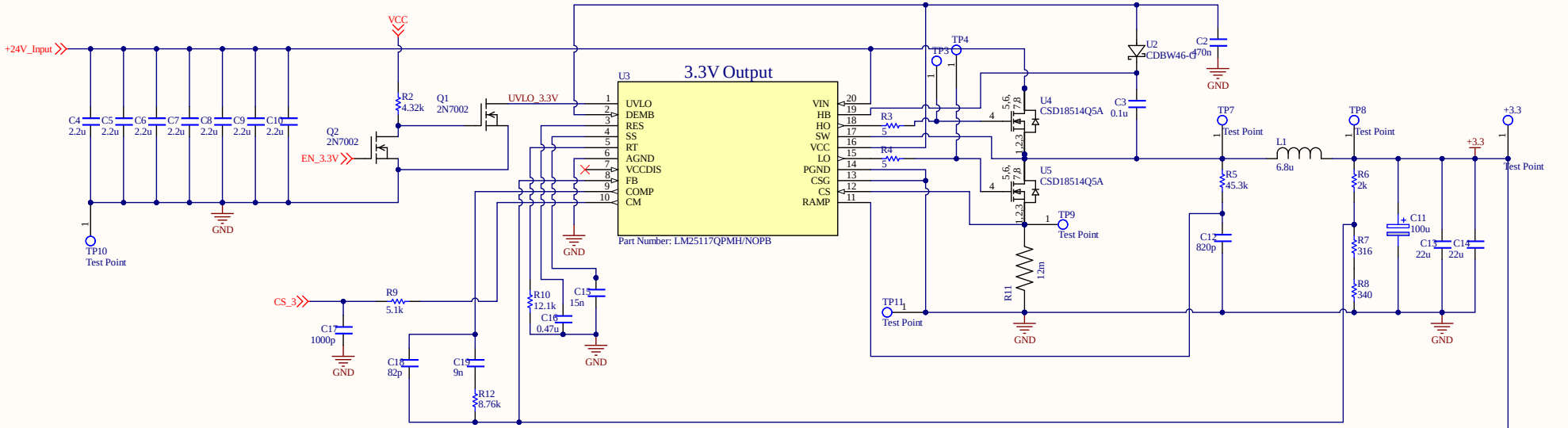

Title *			
Size: B	Number:*	Revision:*	
Date: 12/29/2019	Time: 5:14:27 PM	Sheet * of *	
File: C:\Users\gurta\Desktop\UW Seattle\19-20 Husky Robotics\REV 1\Chassis-Power-Distro-PCB-A-2019-2020\Power_3.3V.SchDoc			

Altium

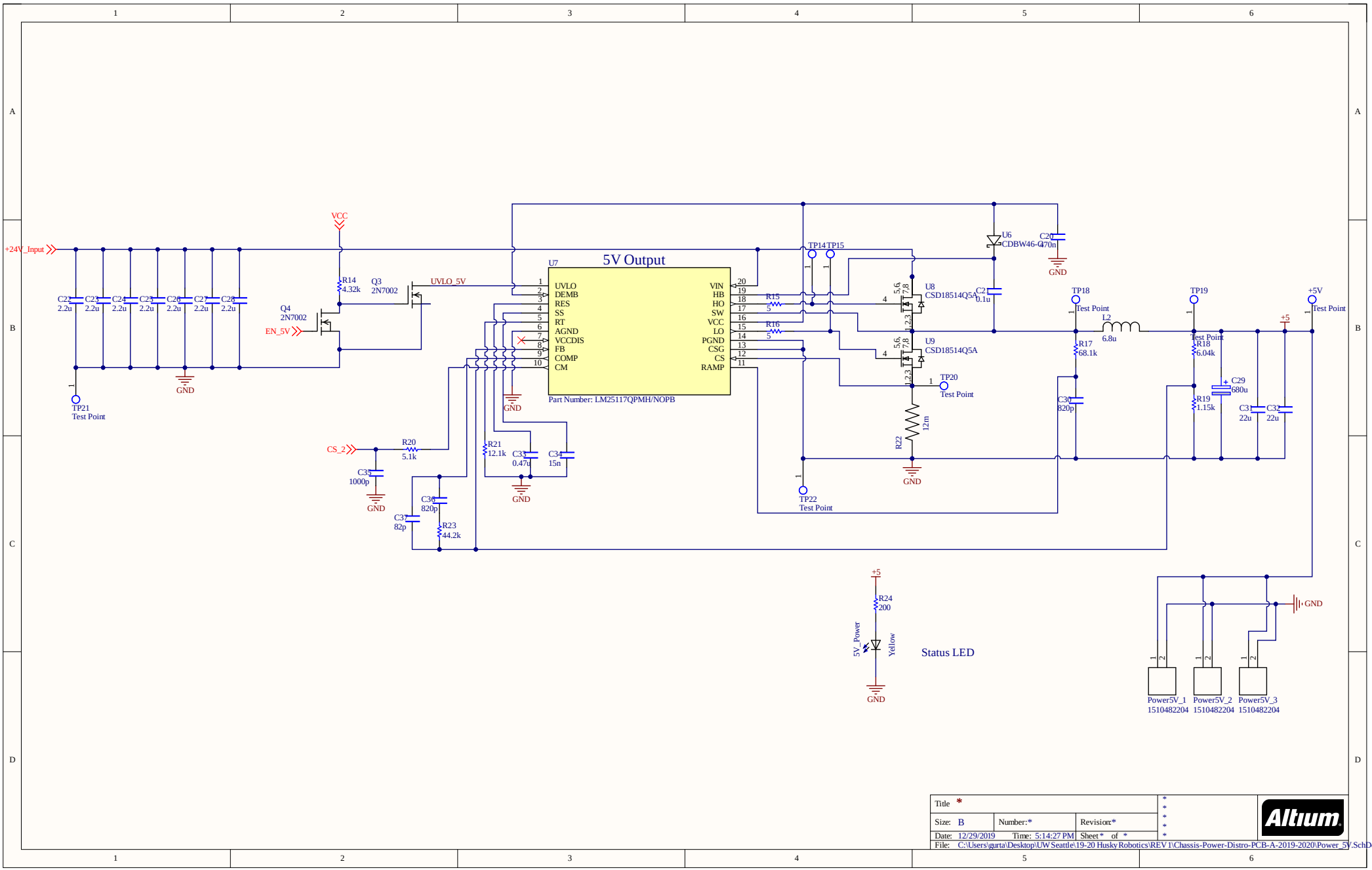
5V Output
U7
UVLO
DEMB
RES
SS
RT
AGND
VCCDIS
FB
COMP
CM
VIN
HB
HO
SW
VCC
LO
PGND
CSG
CS
RAMP
Part Number: LM25117QPMH/NOPB
+24V_Input
VCC
EN_5V
UVLO_5V
CS_2
C22 2.2u
C23 2.2u
C24 2.2u
C25 2.2u
C26 2.2u
C27 2.2u
C28 2.2u
R14 4.32k
Q3 2N7002
Q4 2N7002
R20 5.1k
C35 1000p
R21 12.1k
C33 0.47u
C34 15n
C36 820p
C37 82p
R23 44.2k
R15 5
R16 5
U6 CDBW46-G
C20 470n
C21 0.1u
U8 CSD18514Q5A
U9 CSD18514Q5A
R22 12m
TP14 TP15
TP20 Test Point
TP22 Test Point
TP21 Test Point
TP18 Test Point
TP19 Test Point
L2 6.8u
R17 68.1k
C30 820p
R18 6.04k
R19 1.15k
C29 680u
C31 22u
C32 22u
+5
+5V
GND
R24 200
5V_Power
Yellow
Status LED
Power5V_1 1510482204
Power5V_2 1510482204
Power5V_3 1510482204
Title *
Size: B
Number:*
Revision:*
Date: 12/29/2019
Time: 5:14:27 PM
Sheet * of *
File: C:\Users\gurta\Desktop\UW Seattle\19-20 Husky Robotics\REV 1\Chassis-Power-Distro-PCB-A-2019-2020\Power_5V.SchDoc
Altium

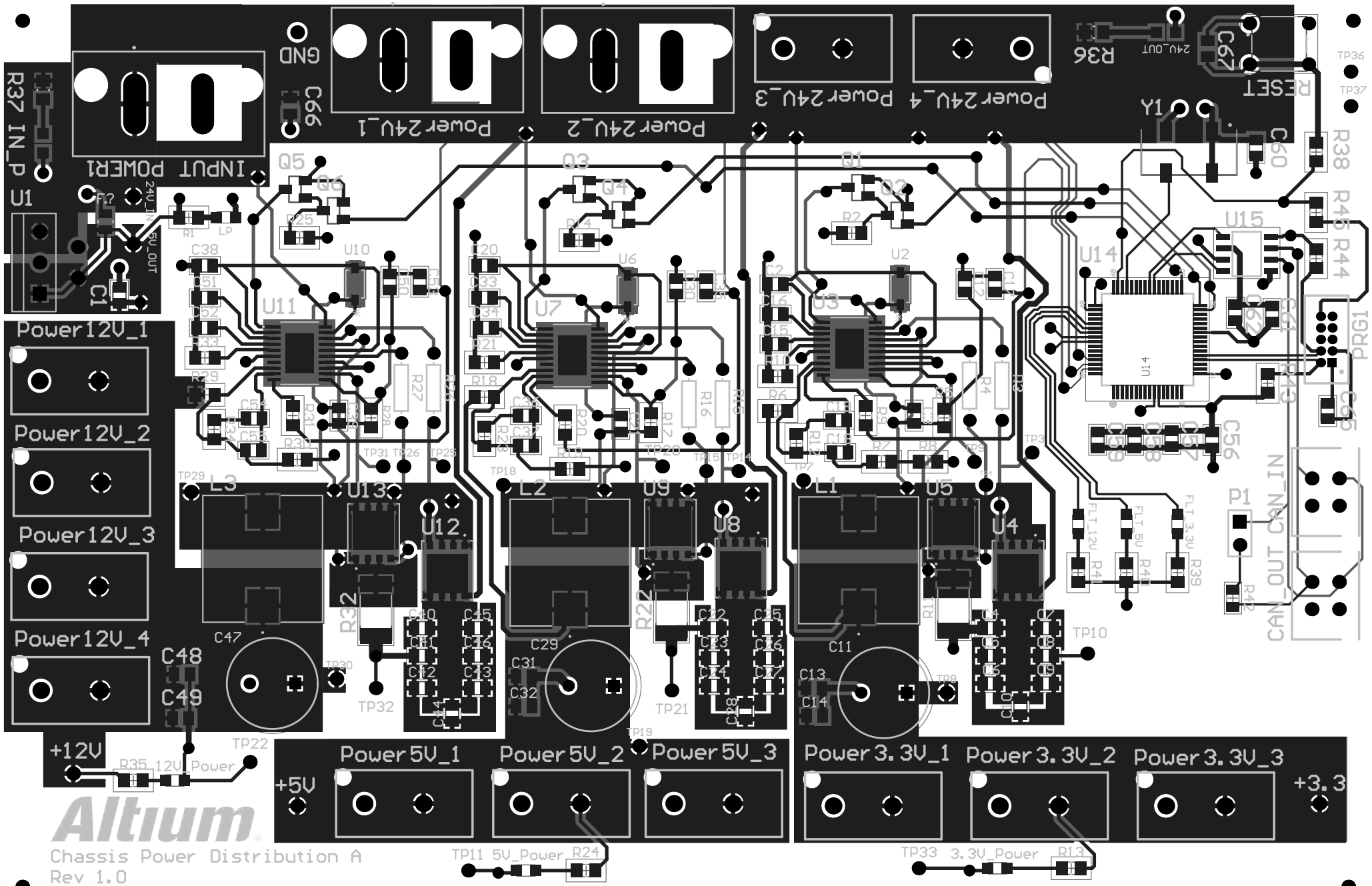
Power12V_1
Power12V_2
Power12V_3
Power12V_4
+12V
Power5V_1
Power5V_2
Power5V_3
+5V
Power3.3V_1
Power3.3V_2
Power3.3V_3
+3.3
INPUT POWER1
GND
Power24V_1
Power24V_2
Power24V_3
Power24V_4
CAN_OUT CAN_IN
Altium
Chassis Power Distribution A
Rev 1.0
By: Gurtaranjit Kaur