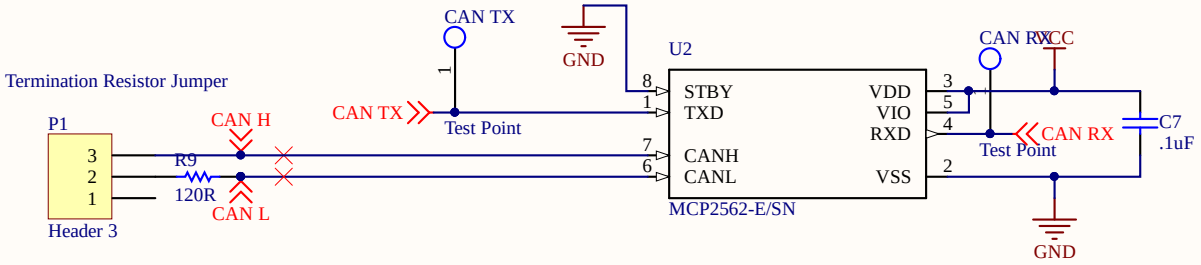

Title			
Size: A	Number		Revision
Date: 12/30/2019		Sheet	of
File: C:\Users\..\CAN.SchDoc		Drawn By:	

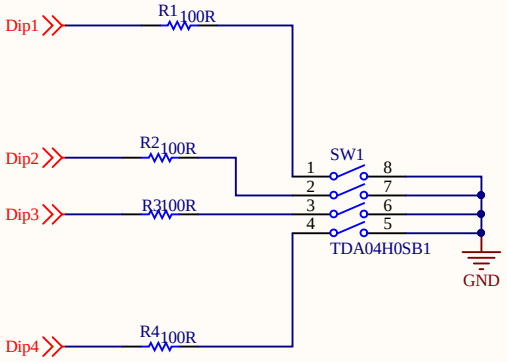

Title *			
Size: Letter	Number:*	Revision:*	
Date: 12/30/2019	Time: 4:17:11 PM	Sheet* of *	
File: C:\Users\austc\Documents\GitHub\Motor-Unit-PCB-A-2019-2020\PSoC Motor Board\DIP Switch.SchDoc			

Status LEDs

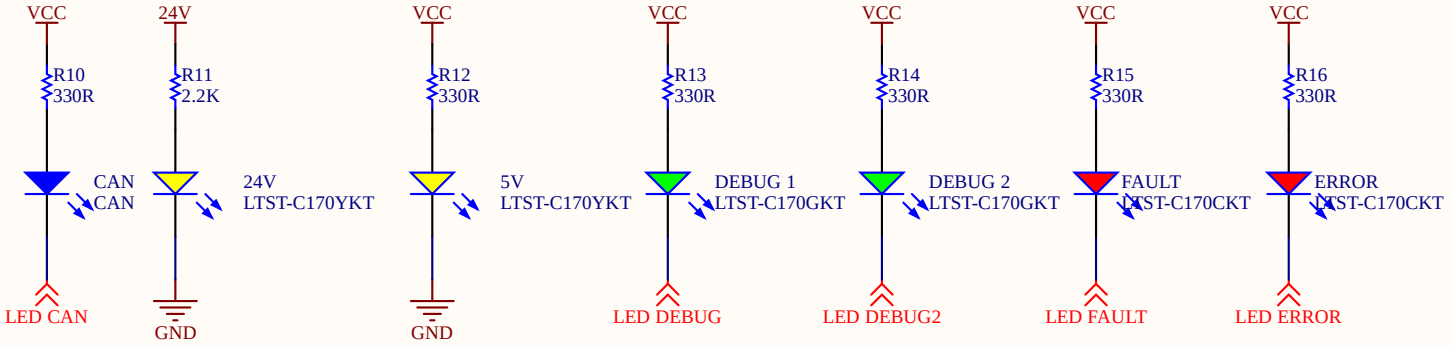

NEO Pixels

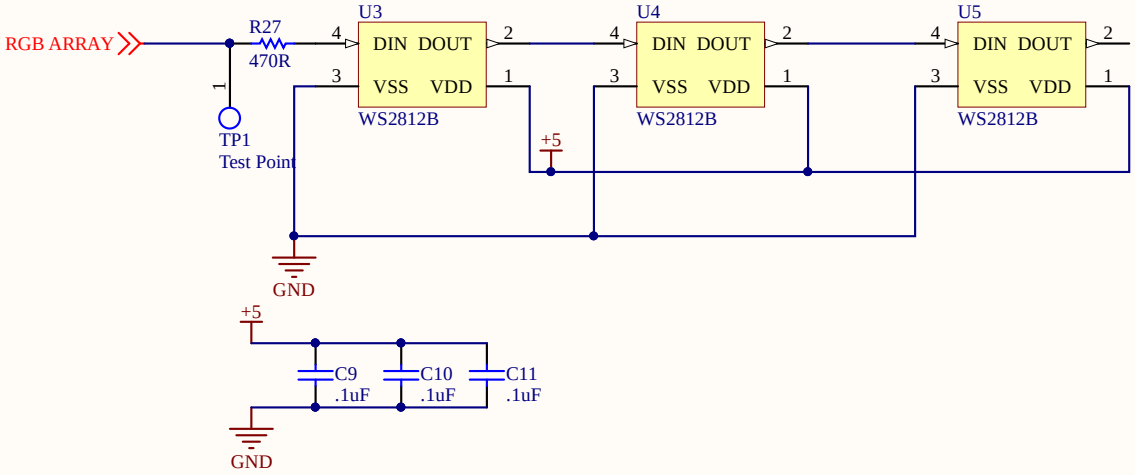

Title		
Size: A	Number	Revision
Date: 12/30/2019		Sheet of
File: C:\Users\..\LEDs.SchDoc		Drawn By:

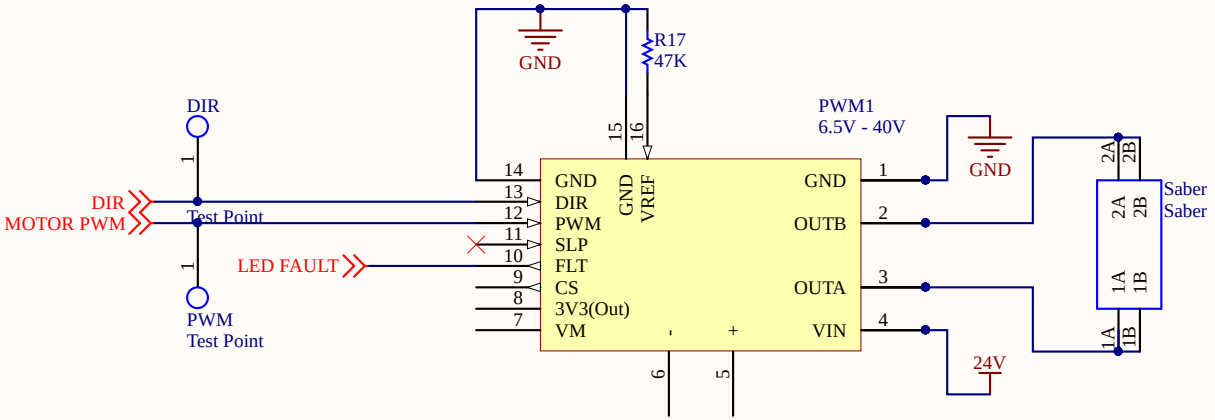

Title			
Size: A	Number:	Revision:	
Date: 12/30/2019		Sheet of	
File: C:\Users\..\Motor Controller.SchDoc		Drawn By:	

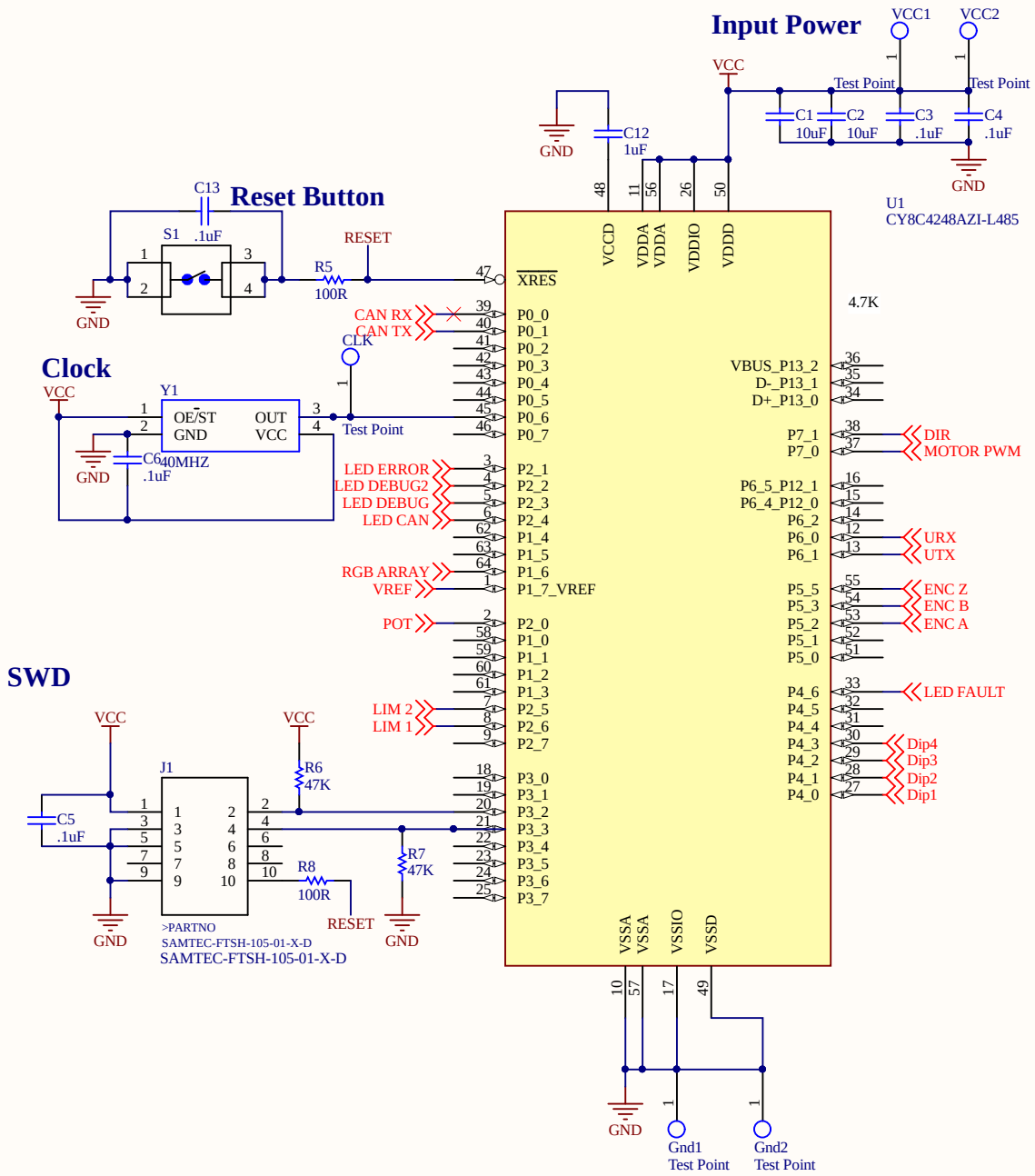

Title *			
Size: Letter	Number:*	Revision:*	
Date: 12/30/2019	Time: 4:17:11 PM	Sheet* of *	
File: C:\Users\austc\Documents\GitHub\Motor-Unit-PCB-A-2019-2020\PSoC Motor Board\PSoC Connections.SchDoc			

UART Debug

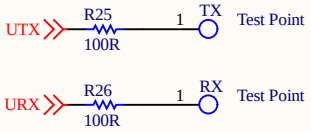

Encoder

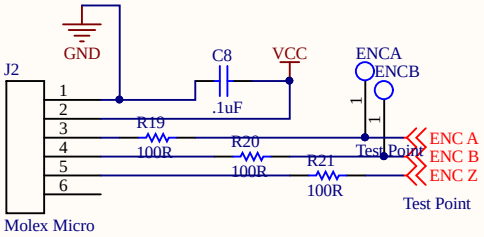

Standard Header

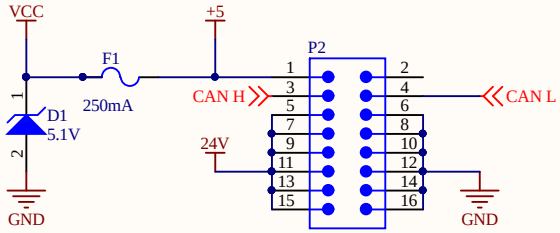

Back Up Headers

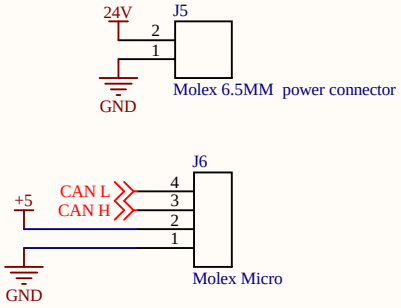

Limit Switches

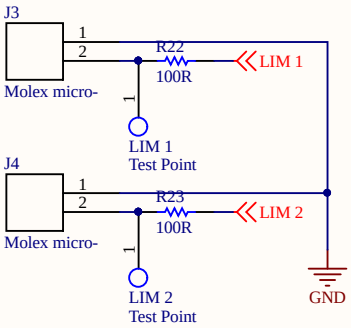

POT

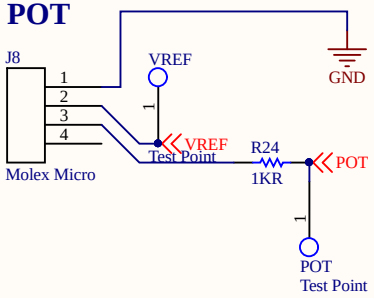

Title *			
Size: Letter	Number:*	Revision:*	
Date: 12/30/2019	Time: 4:17:11 PM	Sheet* of *	
File: C:\Users\austc\Documents\GitHub\Motor-Unit-PCB-A-2019-2020\PSoC Motor Board\Standard Header.SchDoc			

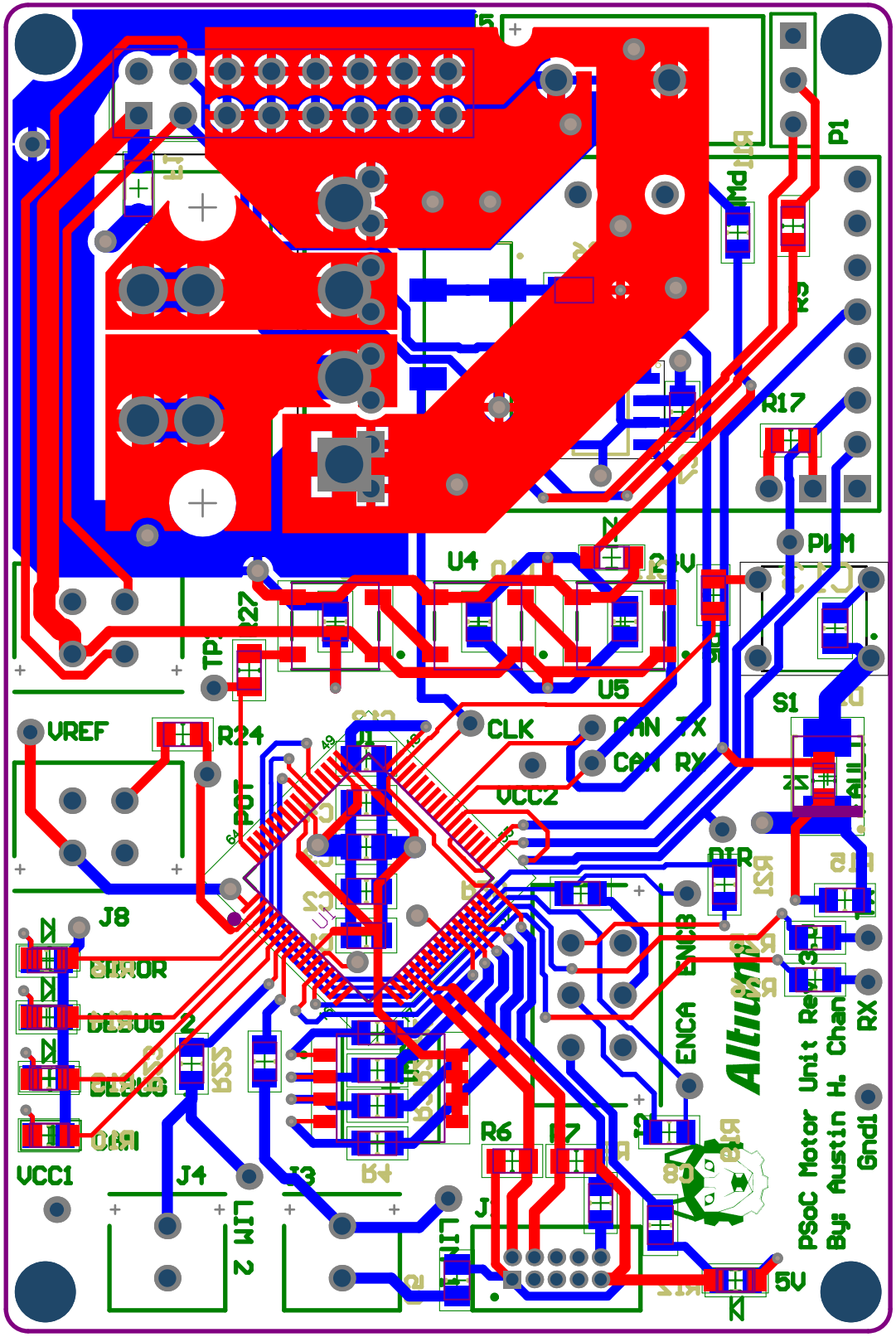

P1
R17
PWM
U4
24V
U5
S1
VREF
R24
CLK
CAN TX
CAN RX
VCC2
DIR
J8
ENCB
ENCA
RX
R6
R7
VCC1
J4
J3
LIM 2
5V
PSoC Motor Unit Rev 3.0
By: Austin H. Chan
Gnd1

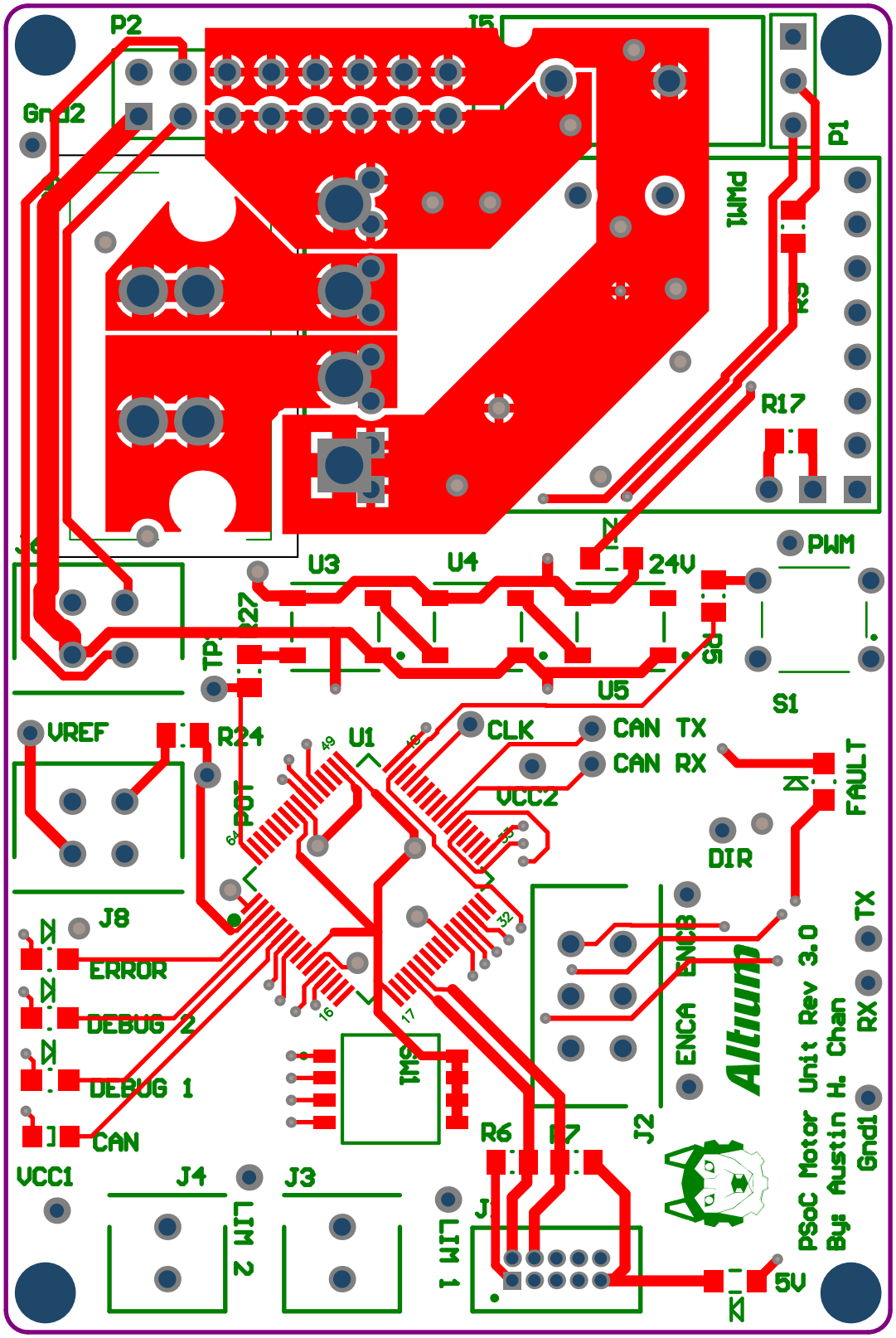
P2
J5
Gnd2
P1
PWM1
R9
R17
PWM
U3
U4
24V
R27
TP1
R5
U5
S1
VREF
R24
U1
CLK
CAN TX
CAN RX
FAULT
VCC2
POT
DIR
J8
ERROR
DEBUG 2
DEBUG 1
CAN
ENC3
ENCA
TX
RX
Gnd1
Altium
PSoC Motor Unit Rev 3.0
By: Austin H. Chan
R6
R7
J2
VCC1
J4
J3
LIM 2
LIM 1
5V

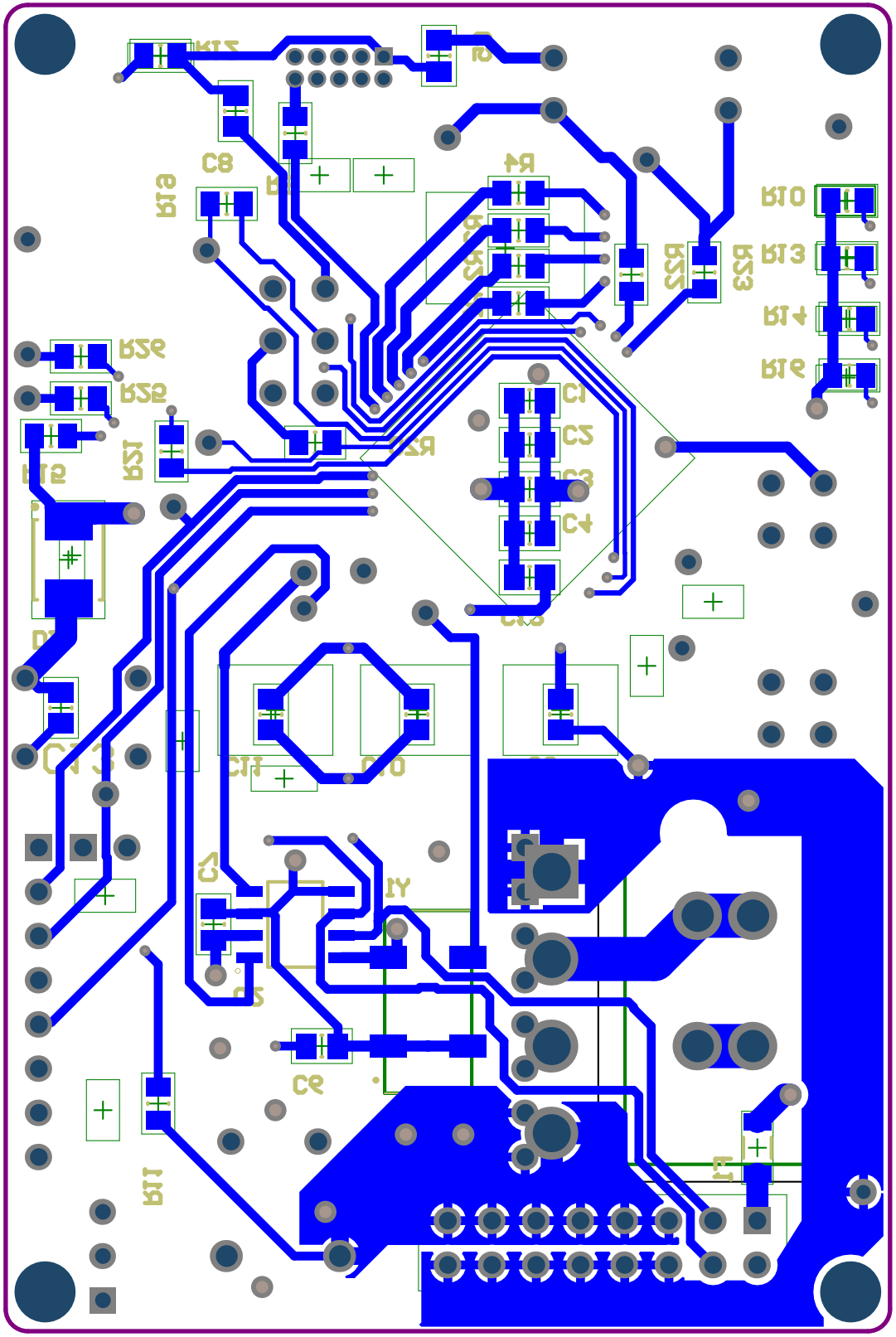

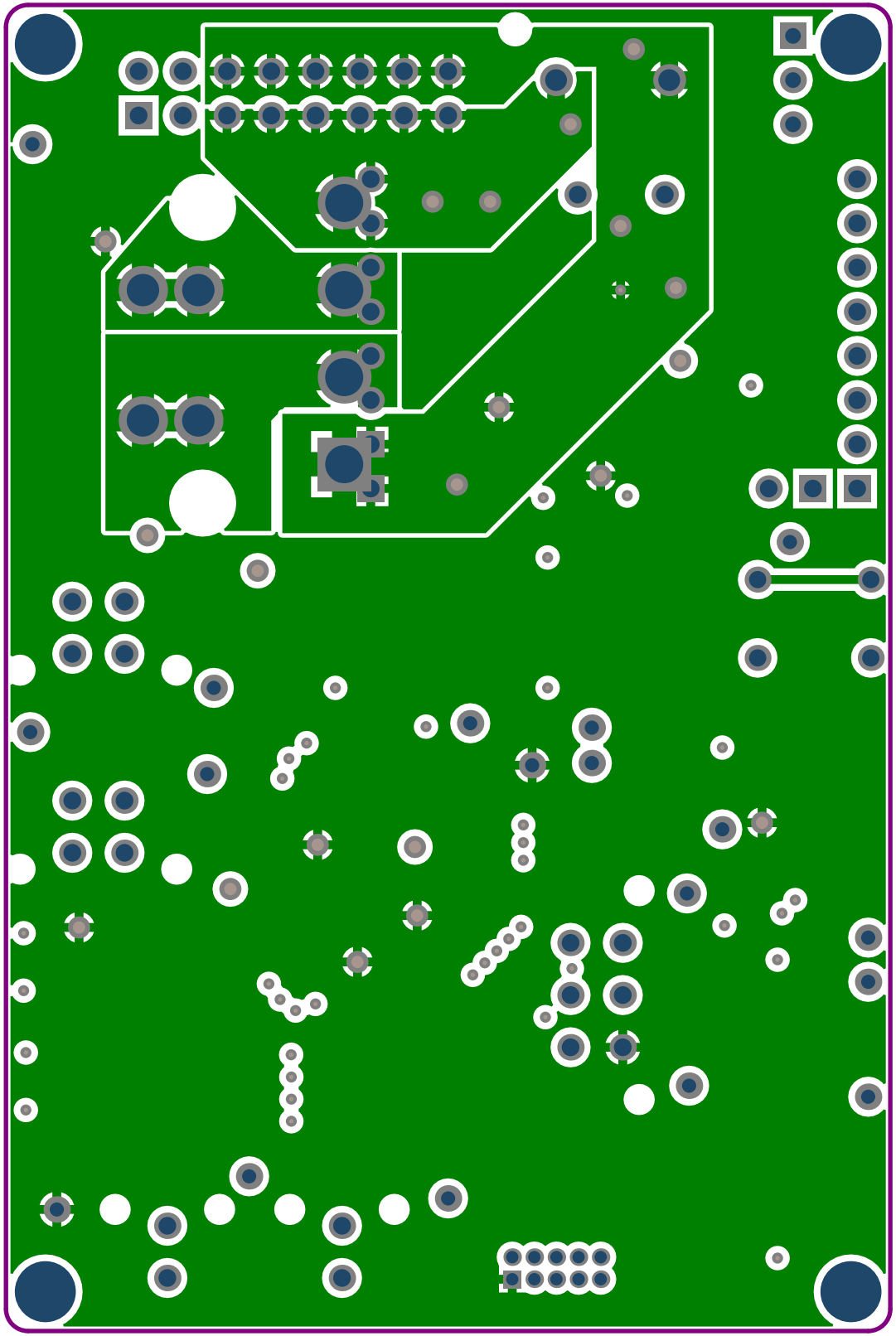

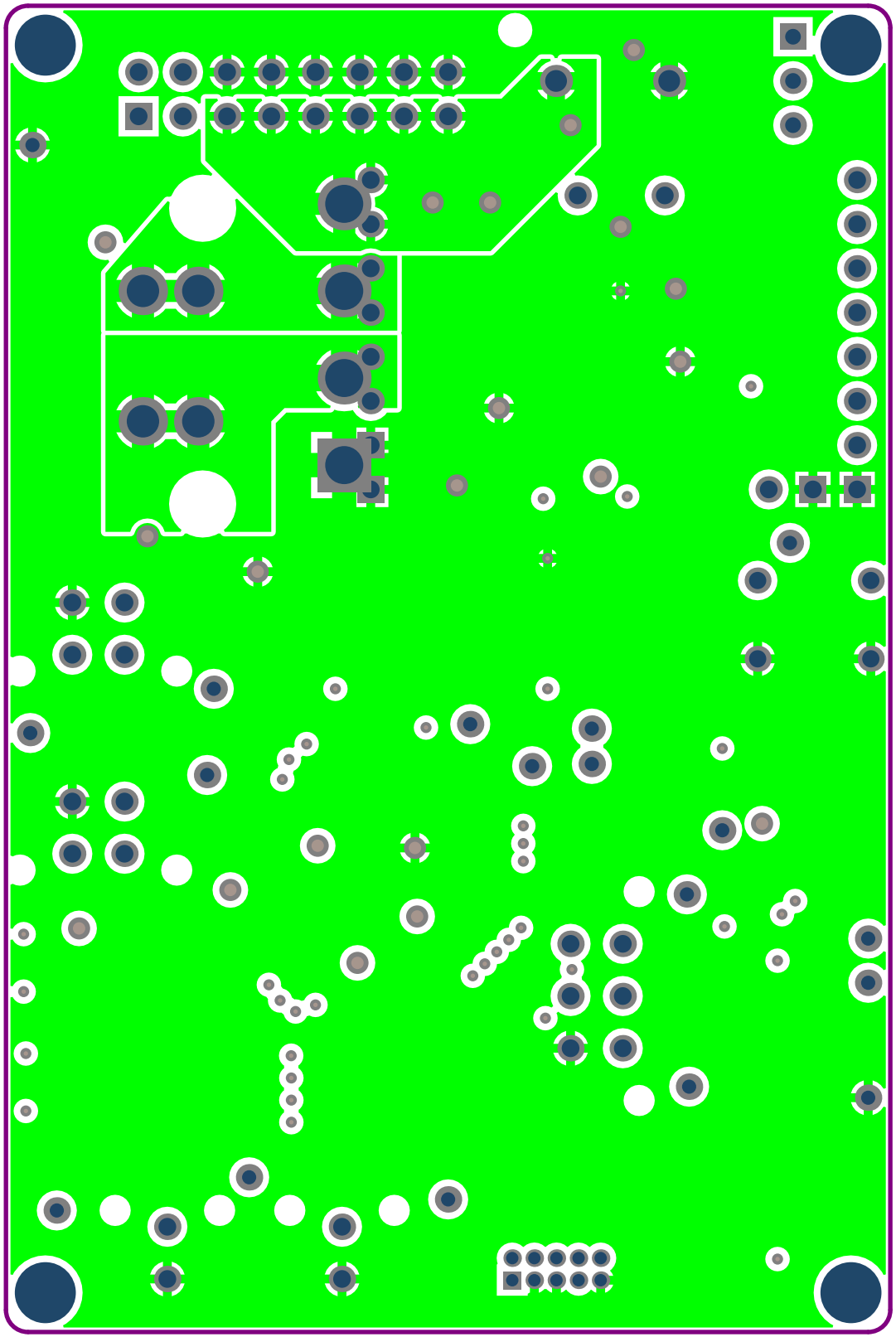

Board Stack R

eport