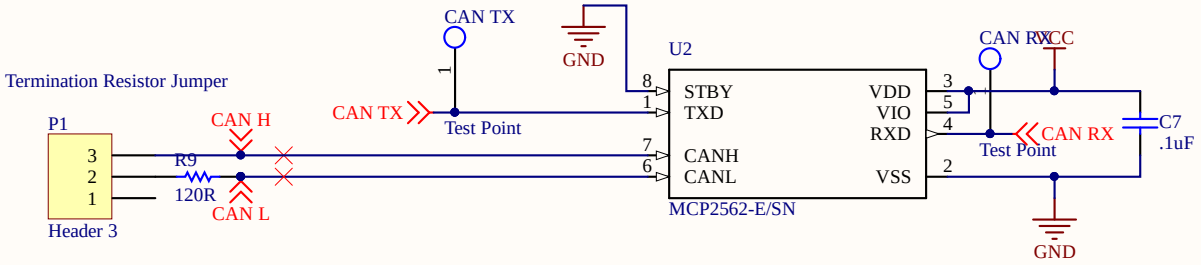

Title			
Size: A	Number		Revision
Date: 12/18/2019		Sheet	of
File: C:\Users\..\CAN.SchDoc		Drawn By:	

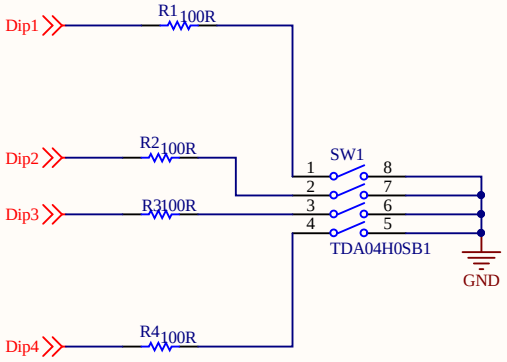

Title *			* * * * *
Size: Letter	Number:*	Revision:*	
Date: 12/18/2019	Time: 12:44:28 PM	Sheet* of *	
File: C:\Users\austc\Documents\GitHub\Motor-Unit-PCB-A-2019-2020\PSoC Motor Board\DIP Switch.SchDoc			

Status LEDs

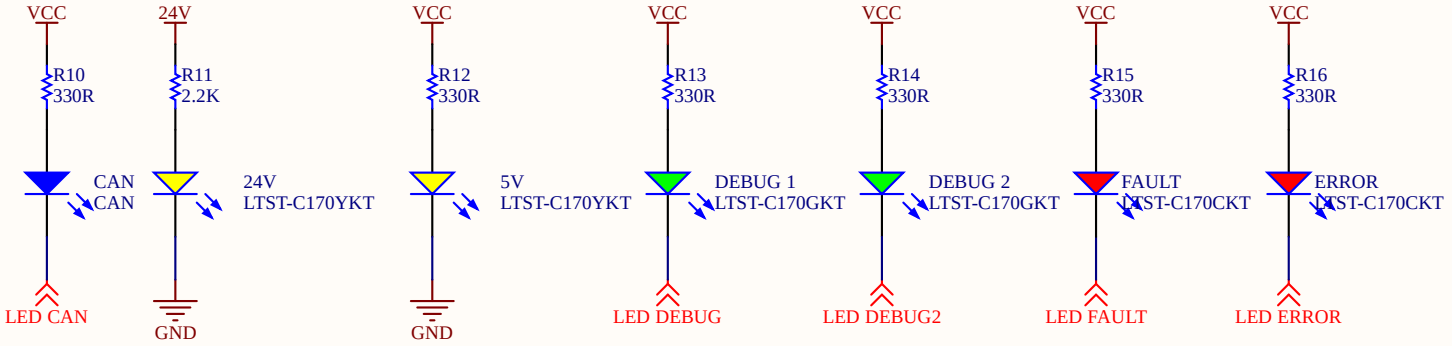

NEO Pixels

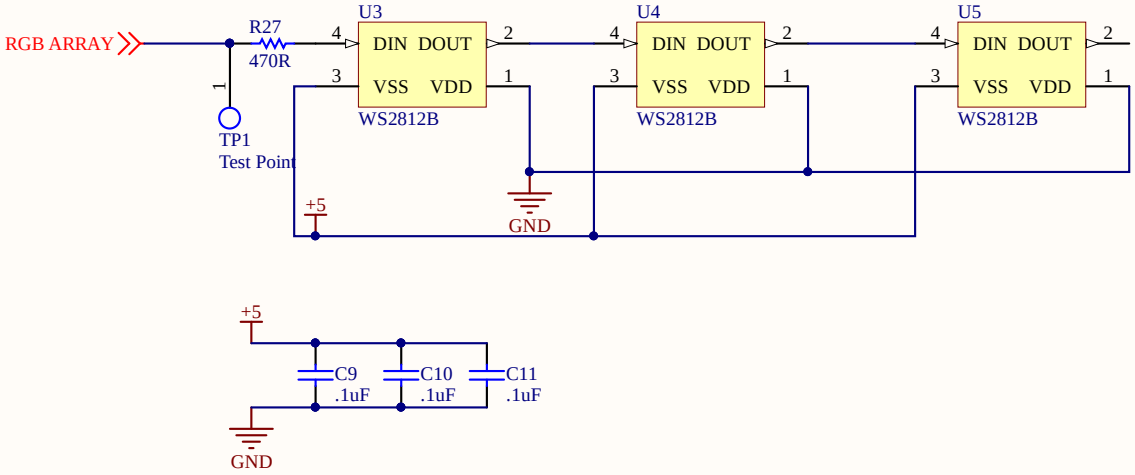

Title		
Size: A	Number	Revision
Date: 12/18/2019		Sheet of
File: C:\Users\..\LEDs.SchDoc		Drawn By:

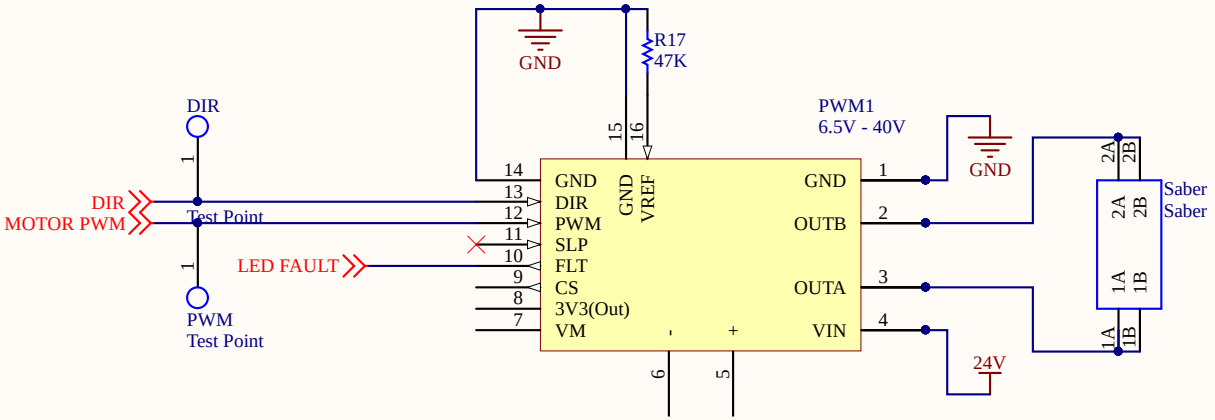

Title			
Size: A	Number:	Revision:	
Date: 12/18/2019		Sheet of	
File: C:\Users\..\Motor Controller.SchDoc		Drawn By:	

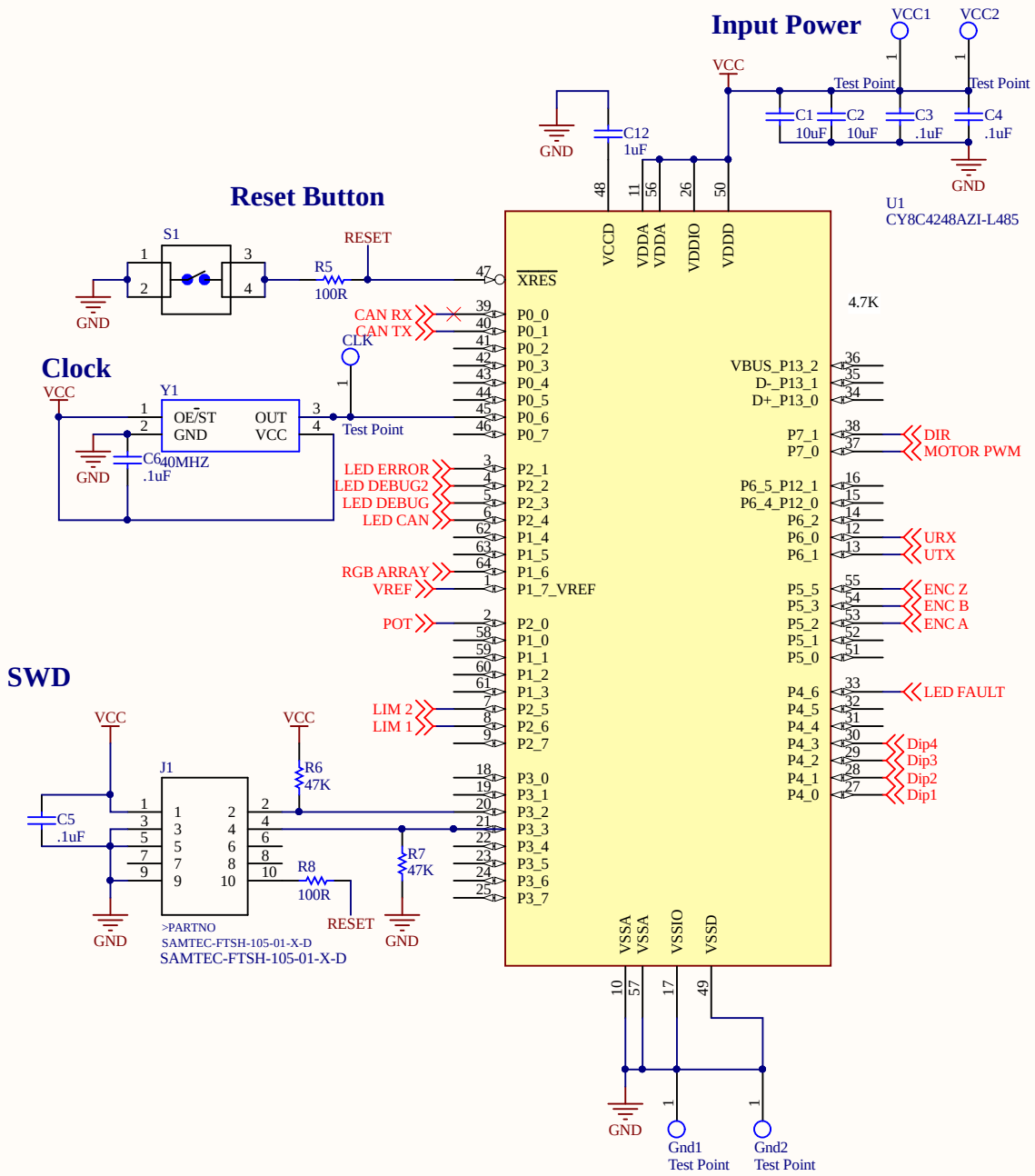

Title *			
Size: Letter	Number:*	Revision:*	
Date: 12/18/2019	Time: 12:44:29 PM	Sheet* of *	
File: C:\Users\austc\Documents\GitHub\Motor-Unit-PCB-A-2019-2020\PSoC Motor Board\PSoC Connections.SchDoc			

UART Debug

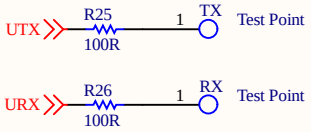

Encoder

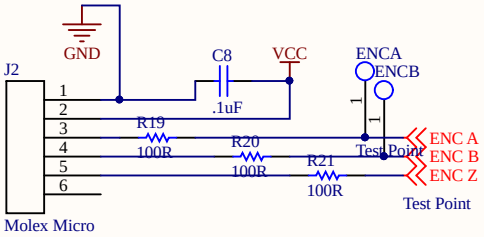

Standard Header

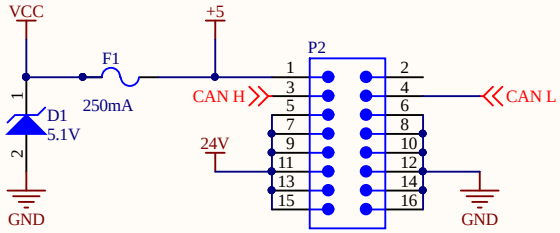

Back Up Headers

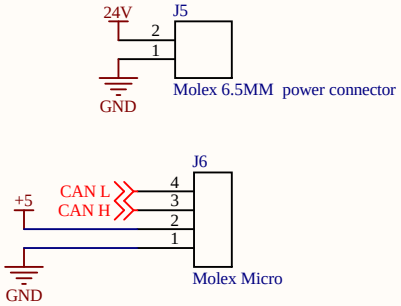

Limit Switches

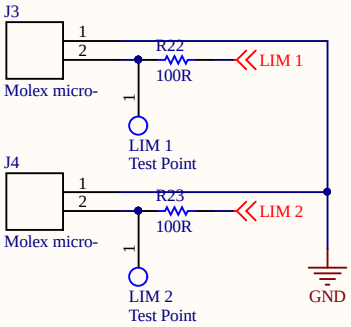

POT

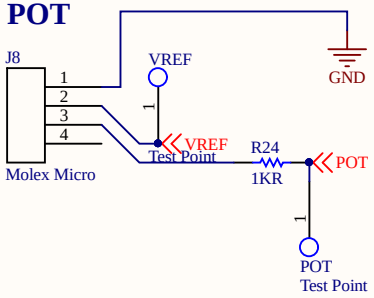

Title *			
Size: Letter	Number:*	Revision:*	
Date: 12/18/2019	Time: 12:44:29 PM	Sheet* of *	
File: C:\Users\austc\Documents\GitHub\Motor-Unit-PCB-A-2019-2020\PSoC Motor Board\Standard Header.SchDoc			

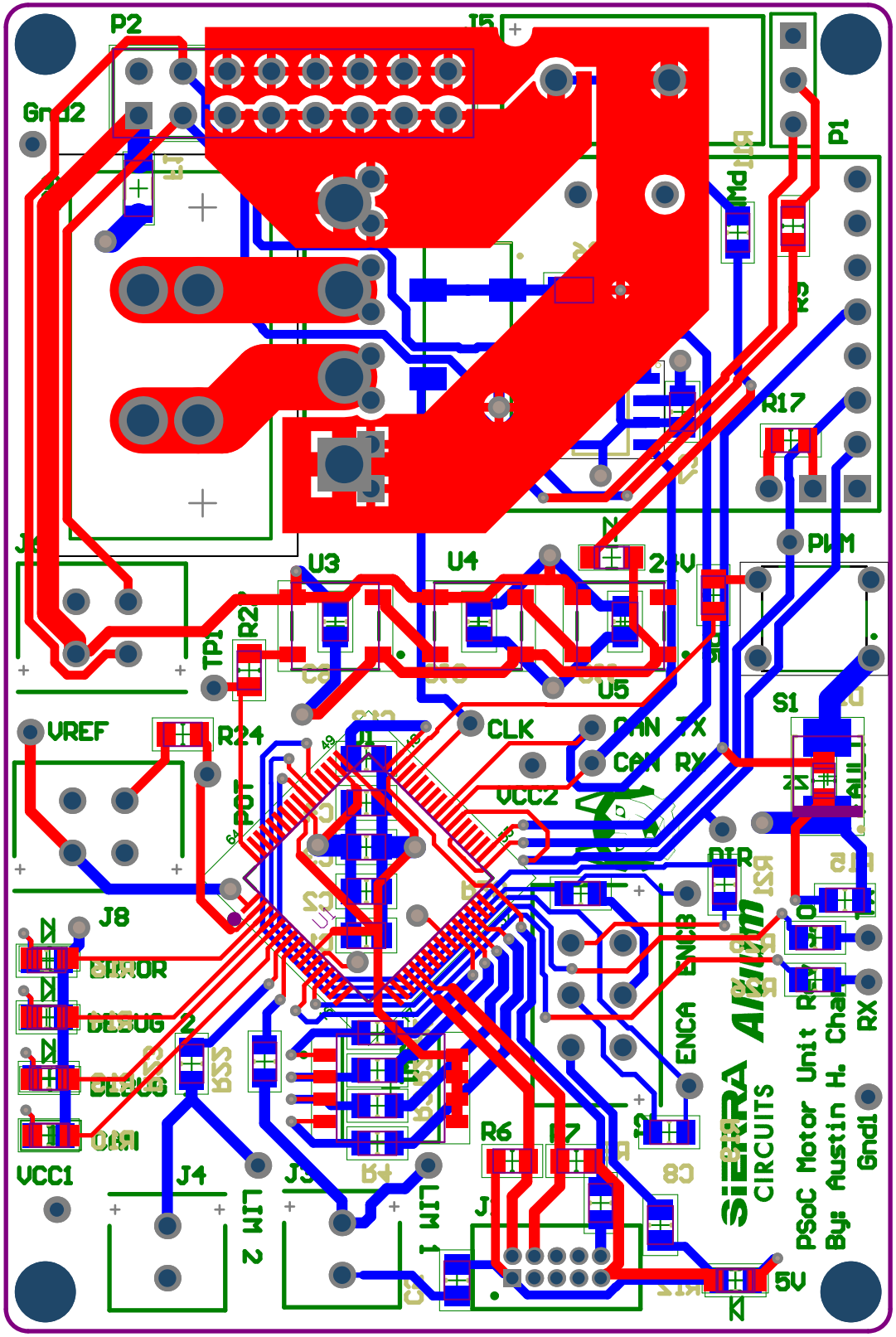
P2
J5
Gnd2
P1
R17
PWM
U3
U4
24V
R2
TP1
U5
S1
VREF
R24
CLK
CAN TX
CAN RX
VCC2
POT
DIR
J8
ENCB
ENCA
RX
R6
R7
VCC1
J4
LIM 2
LIM 1
5V
SIERRA CIRCUITS
PSoC Motor Unit
By: Austin H. Chan
Gnd1

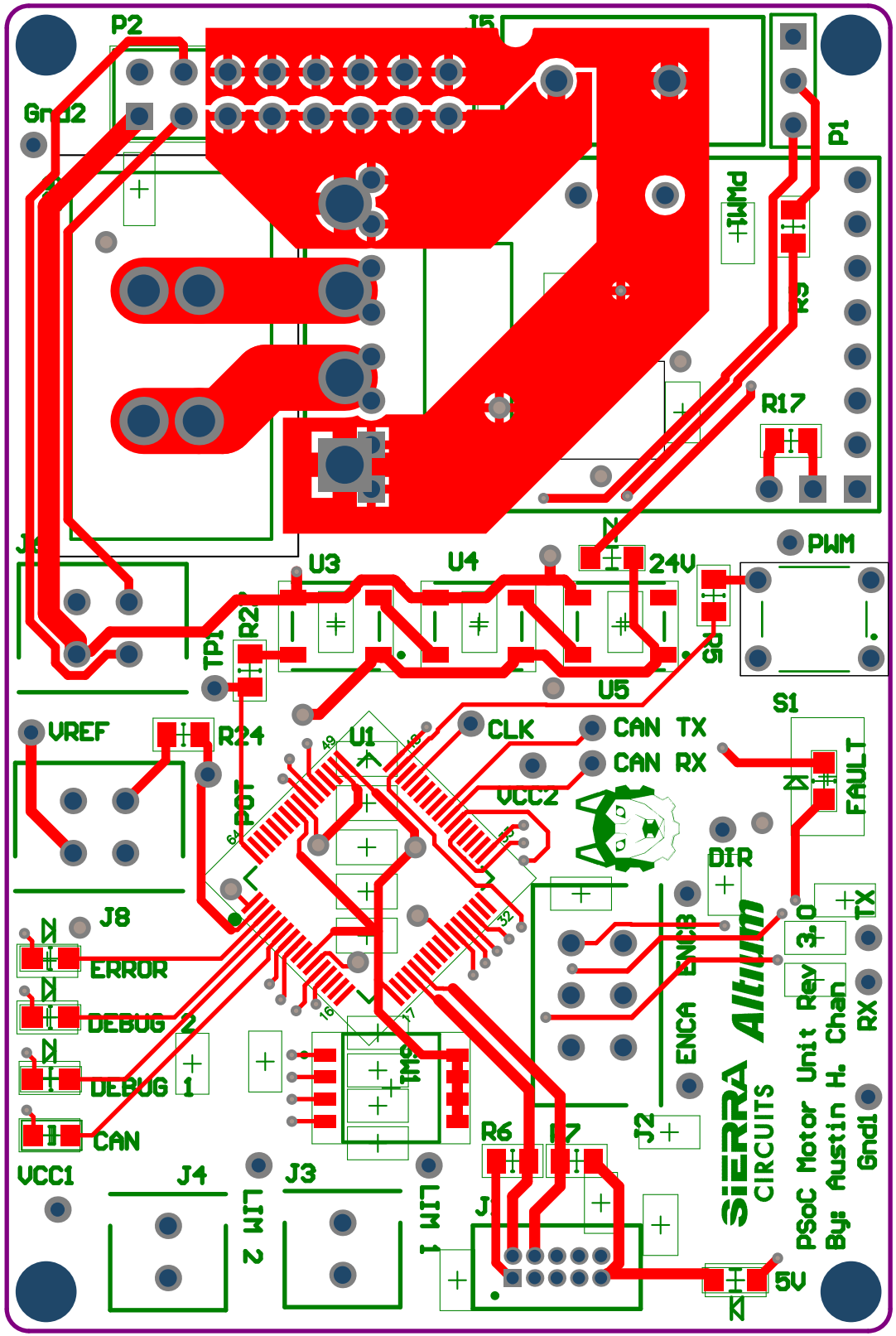
P2
J5
Gnd2
P1
PWM1
R3
R17
J1
U3
U4
24V
PWM
TP1
R2
SW
U5
S1
VREF
R24
U1
CLK
CAN TX
CAN RX
POT
VCC2
FAULT
DIR
J8
ERROR
DEBUG 2
DEBUG 1
CAN
ENCB
ENCA
3.0
TX
RX
Gnd1
Rev
Unit
Motor
PSoC
By Austin H. Chan
SIERRA CIRCUITS
Altium
VCC1
J4
J3
LIM 2
LIM 1
R6
R7
J2
J
SW2

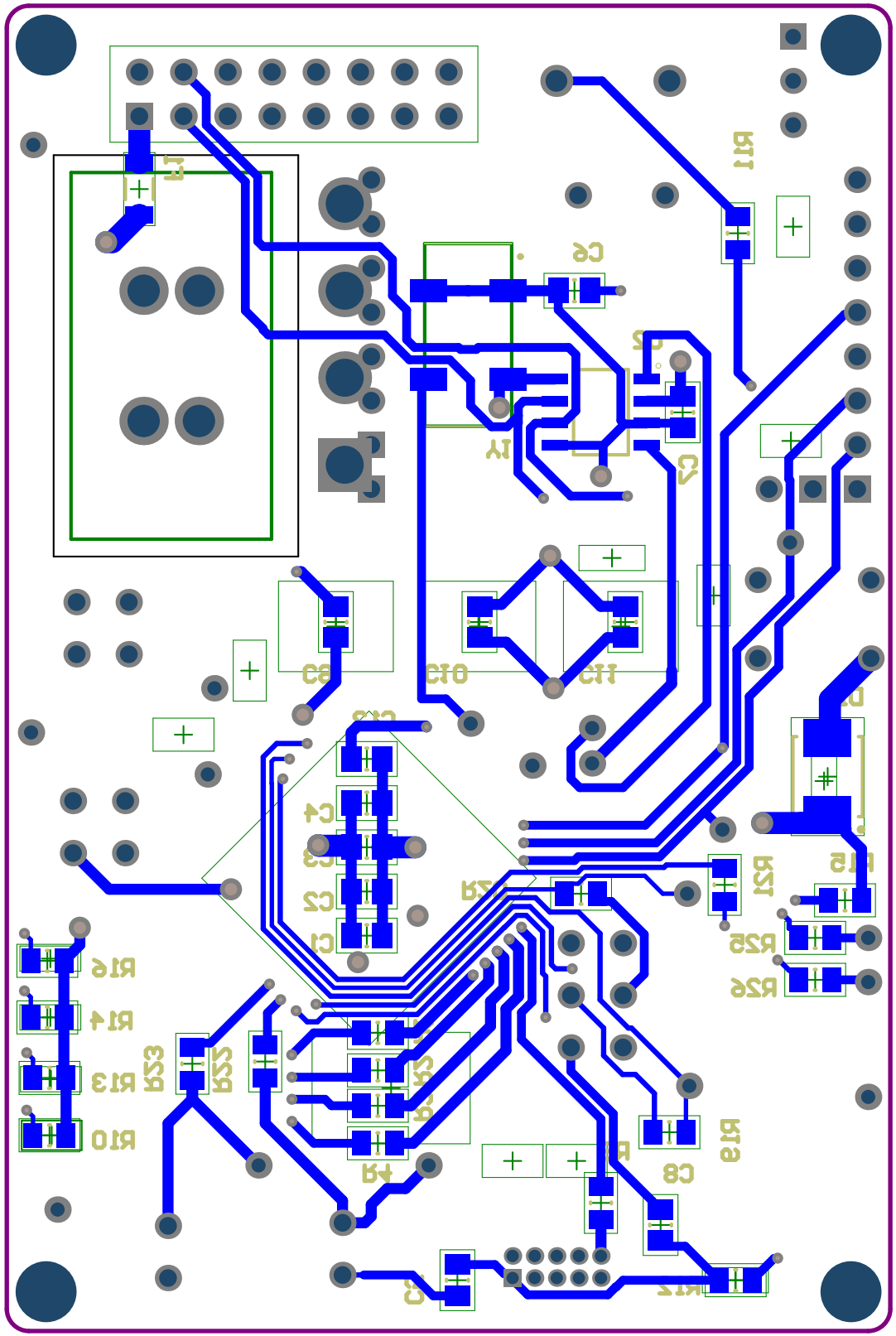
R16
R14
R13
R10
C8
C6
C4
C3
C2
C1

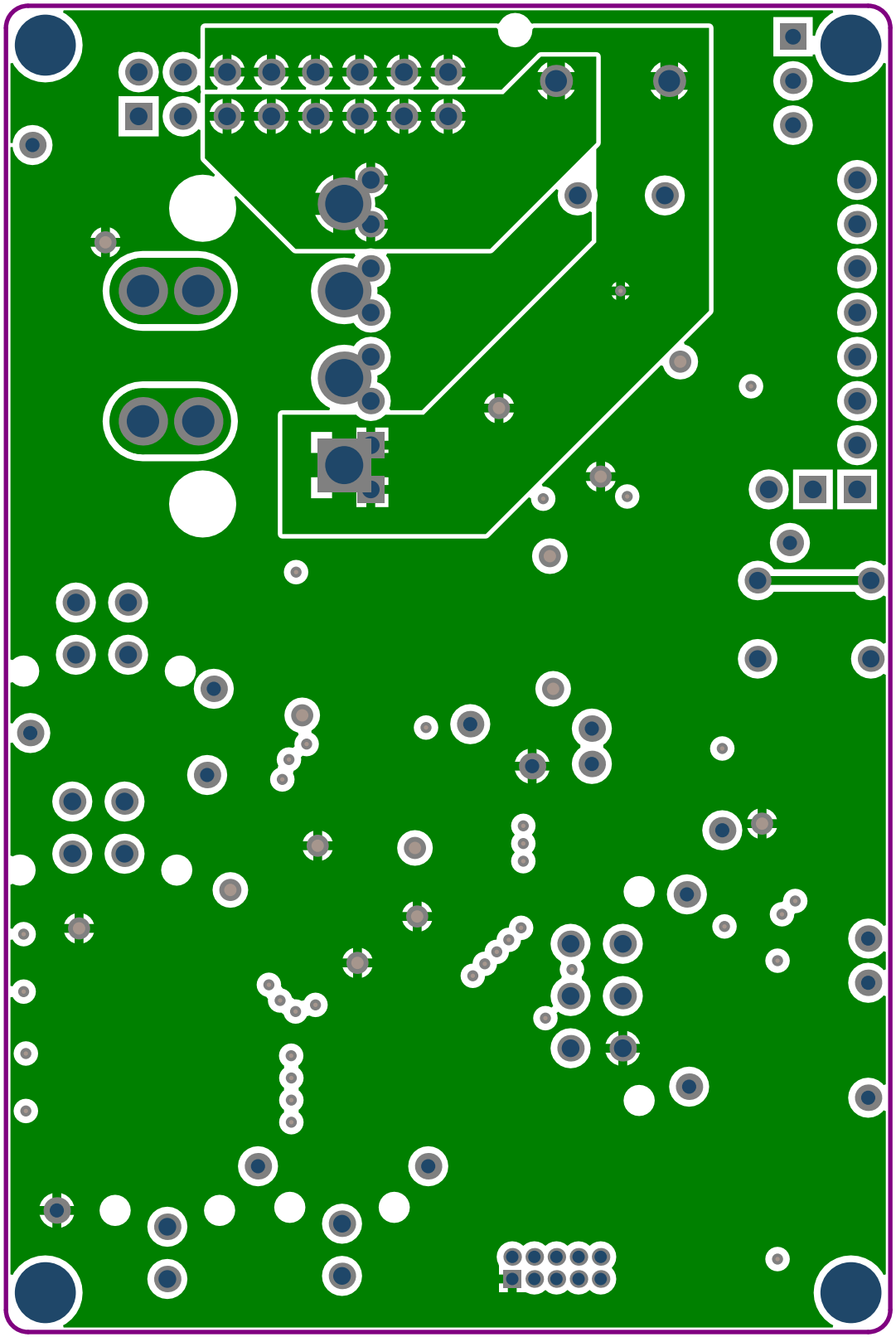

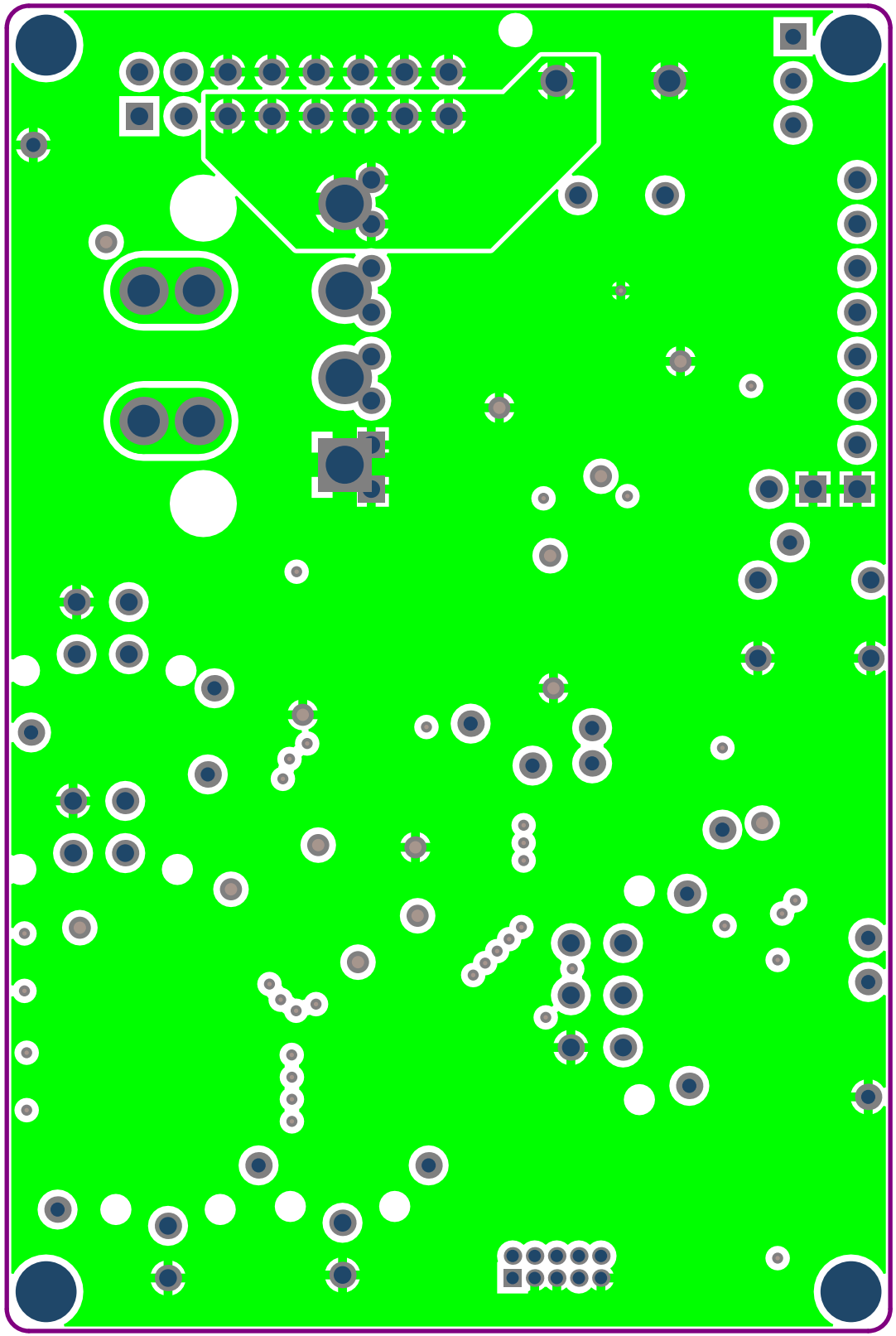

Board Stack R

eport