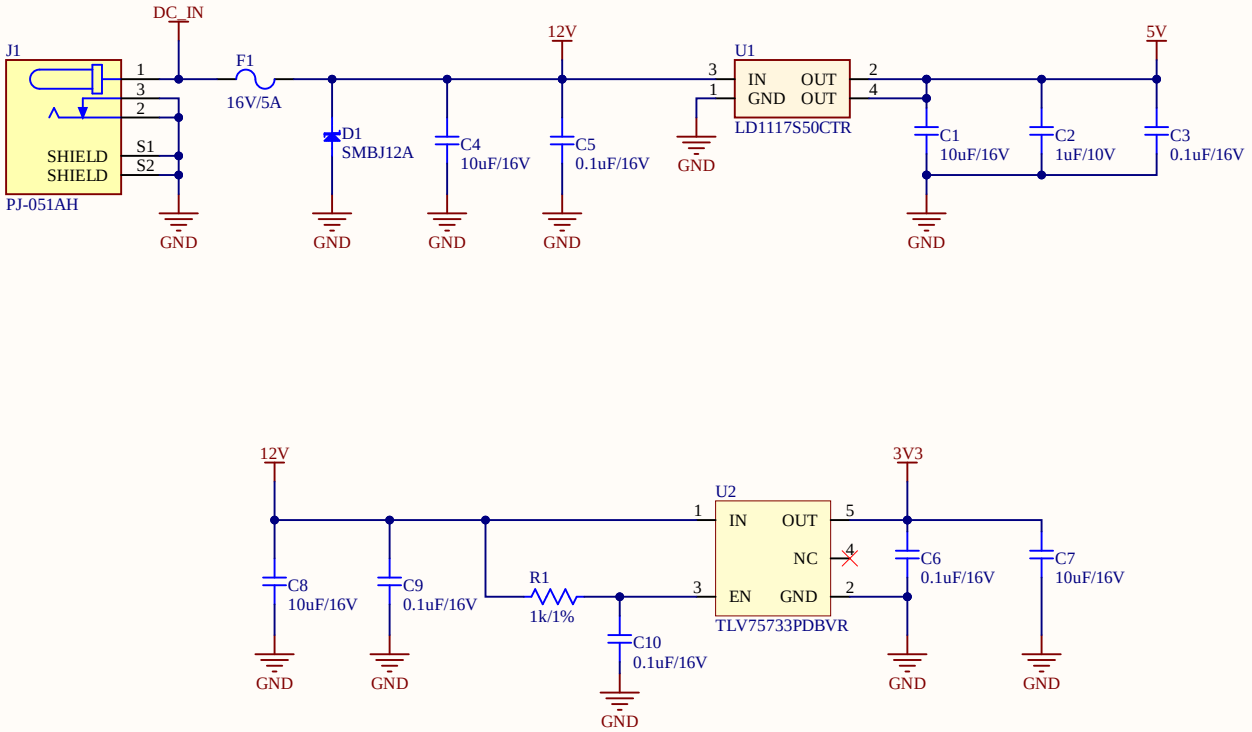

FID1 FID2 FID3 FID4

Title: **Power_Supply.SchDoc**	
Project: Time_Clock_CTRL_V1.0.0.PrjPcb	
Size: A	Sheet: 1 of 7
16/02/2026	12:50:22 am

SEKURE NETWORKS

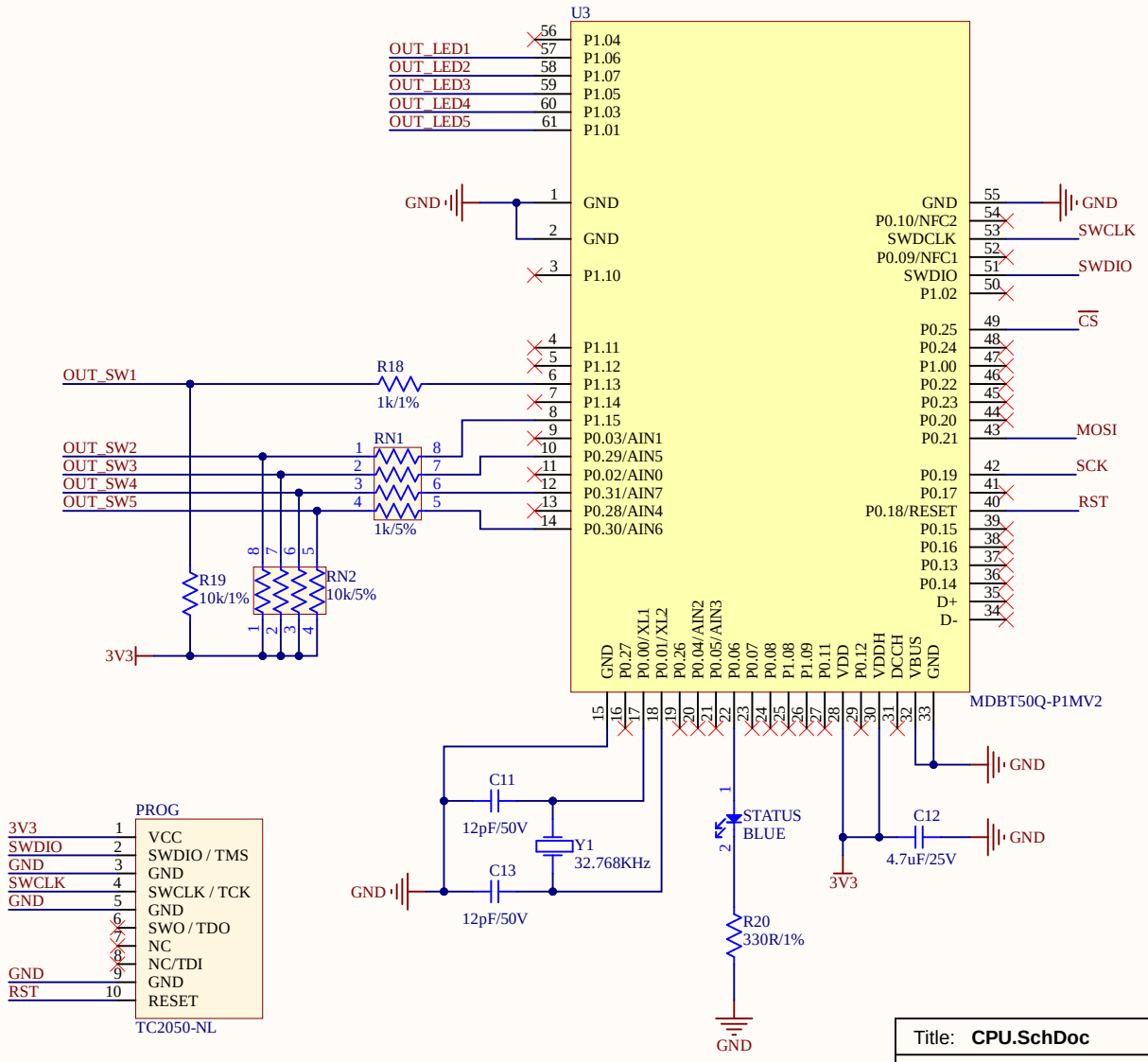

Title: **CPU.SchDoc**	
Project: Time_Clock_CTRL_V1.0.0.PrjPcb	
Size: A	Sheet: 2 of 7
16/02/2026	12:50:22 am

SEKURE NETWORKS

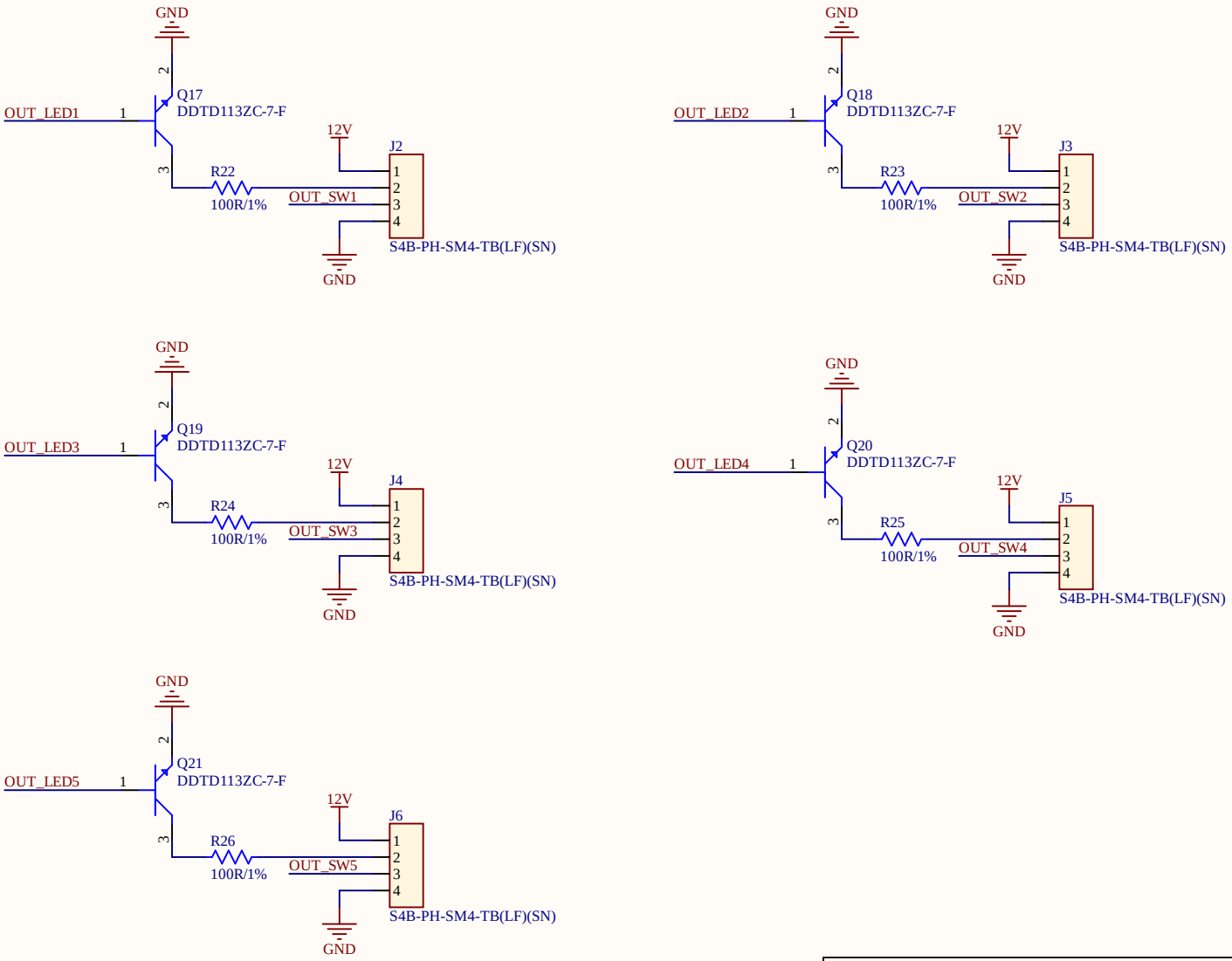

Title: **Buttons.SchDoc**		
Project: Time_Clock_CTRL_V1.0.0.PrjPcb		
Size: A	Sheet: 3 of 7	SEKURE NETWORKS
16/02/2026	12:50:22 am	

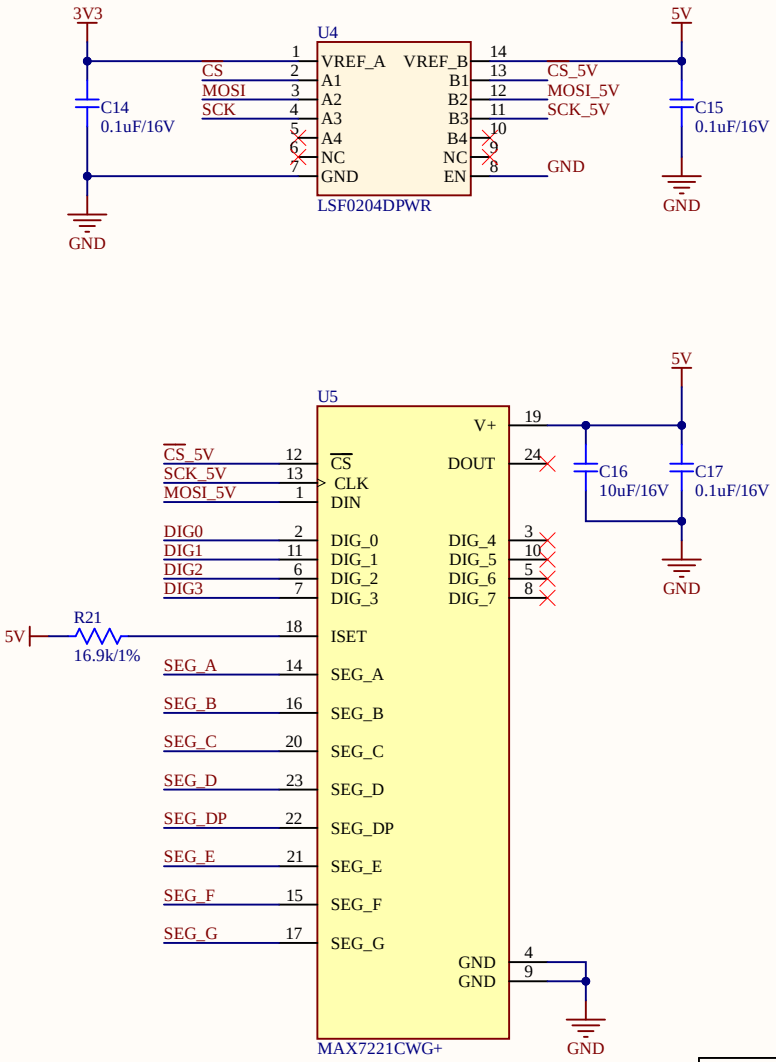

Title: **Seven_Segment.SchDoc**	
Project: Time_Clock_CTRL_V1.0.0.PrjPcb	
Size: A	Sheet: 4 of 7
16/02/2026	12:50:22 am

SEKURE NETWORKS

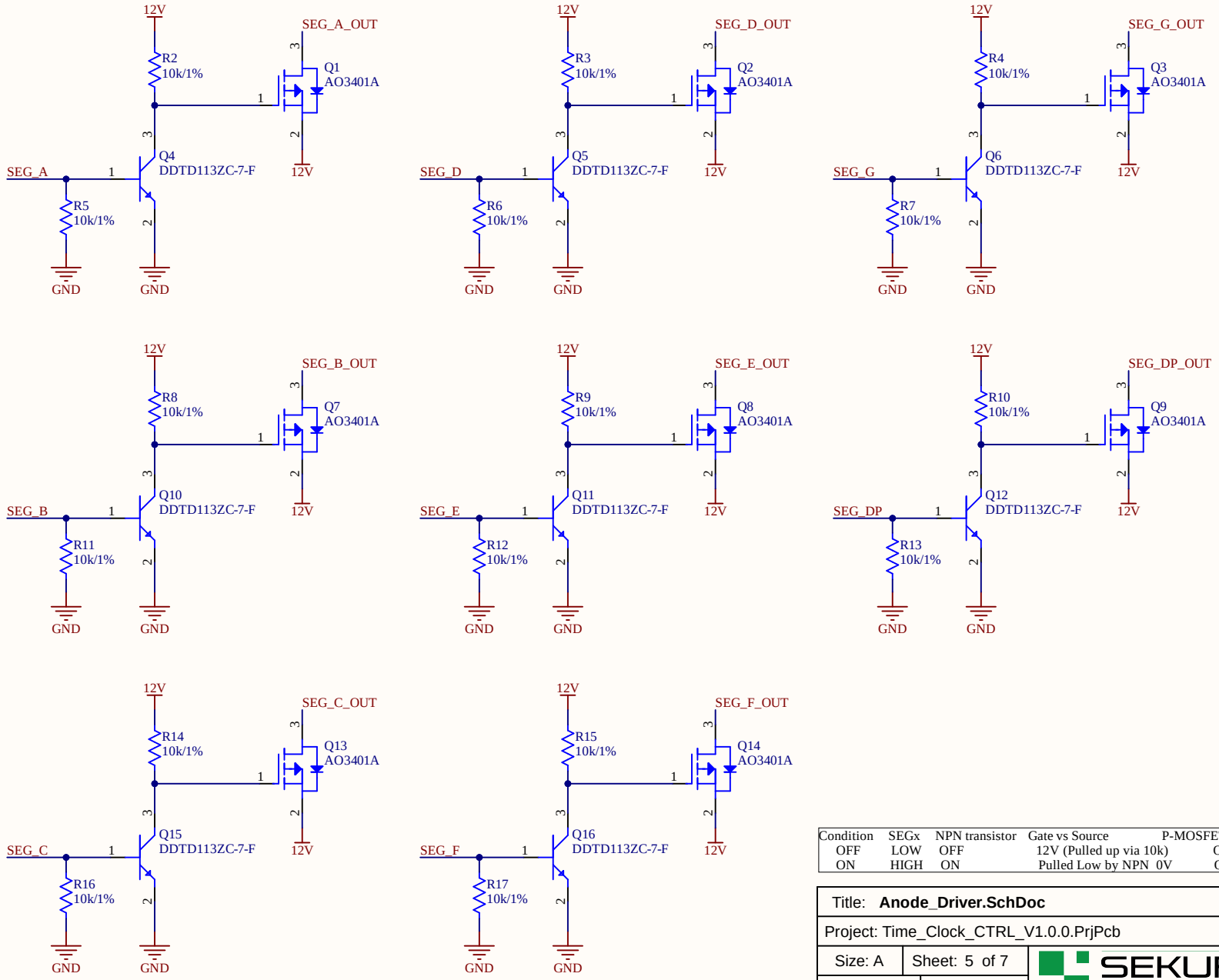

Condition	SEGx	NPN transistor	Gate vs Source	P-MOSFET state
OFF	LOW	OFF	12V (Pulled up via 10k)	OFF
ON	HIGH	ON	Pulled Low by NPN 0V	ON

Title: **Anode_Driver.SchDoc**		
Project: Time_Clock_CTRL_V1.0.0.PrjPcb		
Size: A	Sheet: 5 of 7	SEKURE NETWORKS
16/02/2026	12:50:22 am	

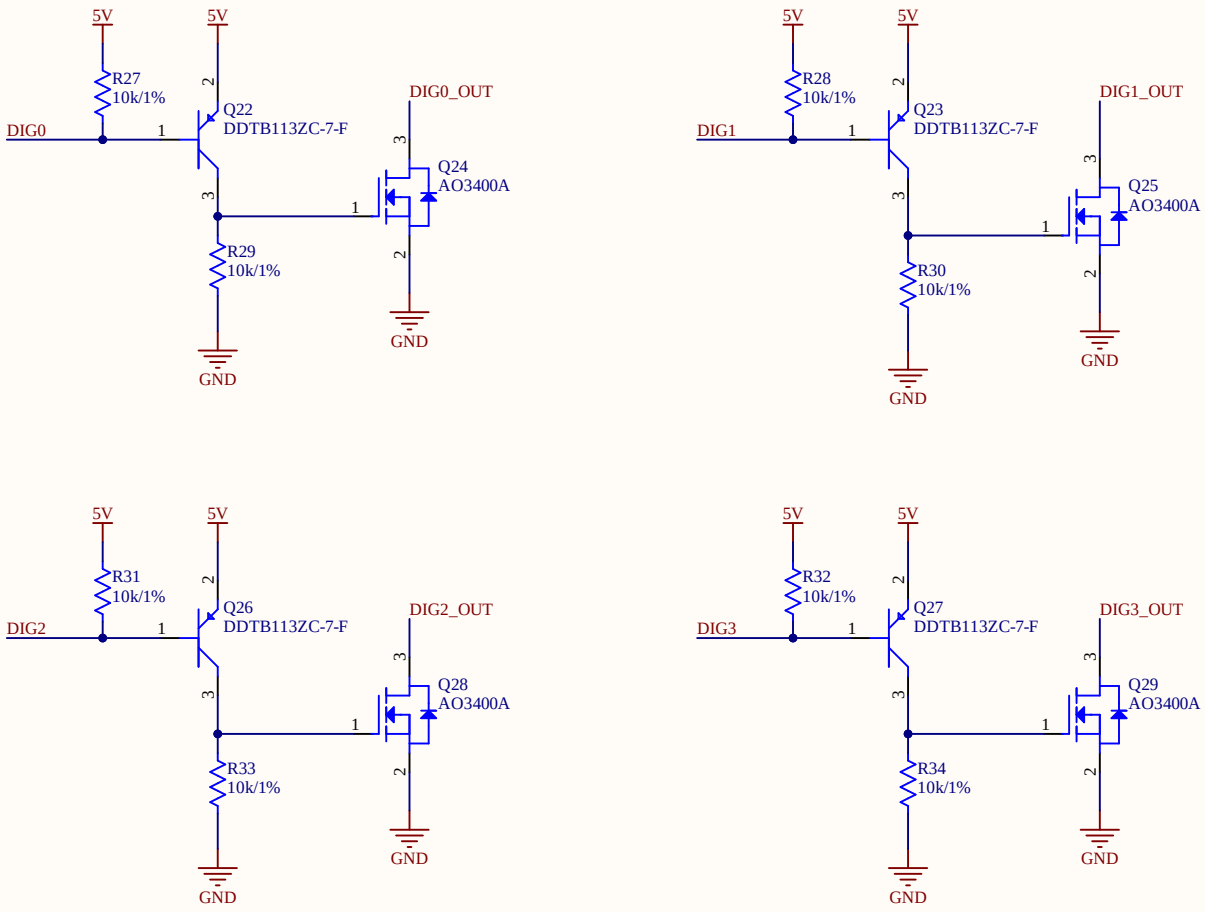

Condition	DIGx	PNP transistor	Gate vs Source	N-MOSFET state
OFF	LOW	ON (pulls gate LOW)	0 V	OFF
ON	HIGH	OFF (gate pulled up via +5 V)	0 V	ON

Title: **Cathode_Driver.SchDoc**		
Project: Time_Clock_CTRL_V1.0.0.PrjPcb		
Size: A	Sheet: 6 of 7	SEKURE NETWORKS
16/02/2026	12:50:22 am	

Digit 1

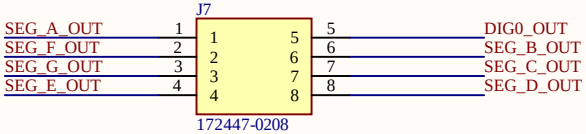

Digit 2

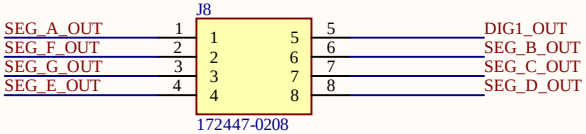

Clock's Colon

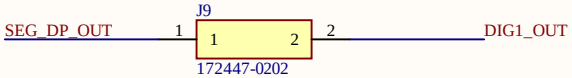

Digit 3

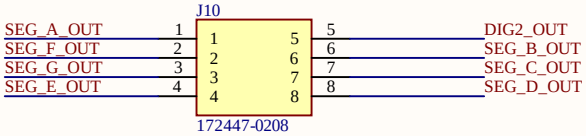

Digit 4

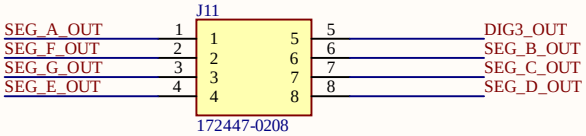

Title: **Outputs.SchDoc**		
Project: Time_Clock_CTRL_V1.0.0.PrjPcb		
Size: A	Sheet: 7 of 7	SEKURE NETWORKS
16/02/2026	12:50:22 am	

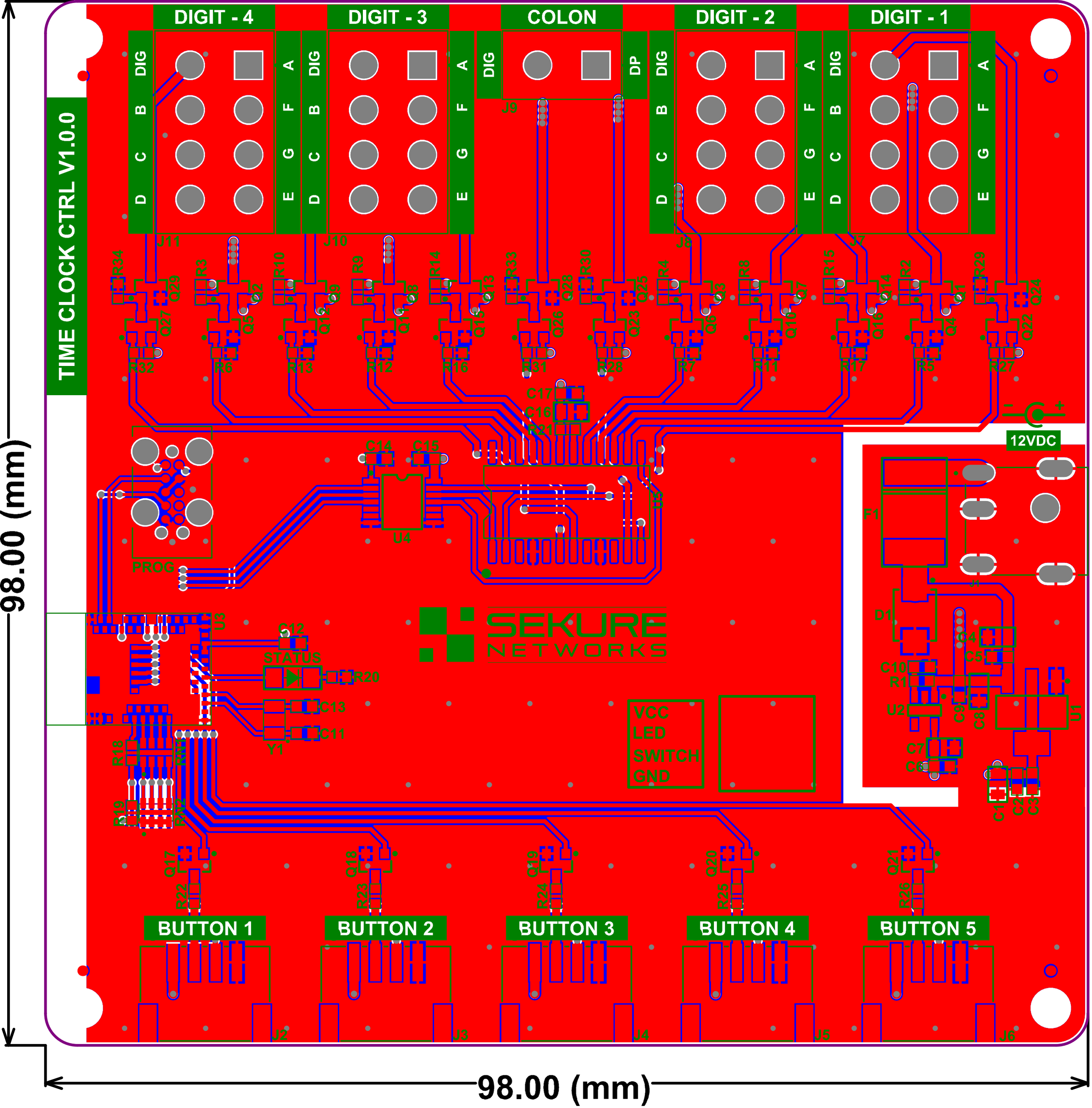
TIME CLOCK CTRL V1.0.0
DIGIT - 4
DIGIT - 3
COLON
DIGIT - 2
DIGIT - 1
DIG
A
B
F
C
G
D
E
DP
J11
J10
J9
J8
J7
12VDC
F1
PROG
U4
U3
C12
STATUS
R20
C13
C11
Y1
SEKURE
NETWORKS
VCC
LED
SWITCH
GND
D1
C10
R1
U2
C7
C6
C9
C8
C4
C5
J1
J4
C1
C2
C3
BUTTON 1
BUTTON 2
BUTTON 3
BUTTON 4
BUTTON 5
J2
J3
J4
J5
J6
98.00 (mm)
98.00 (mm)

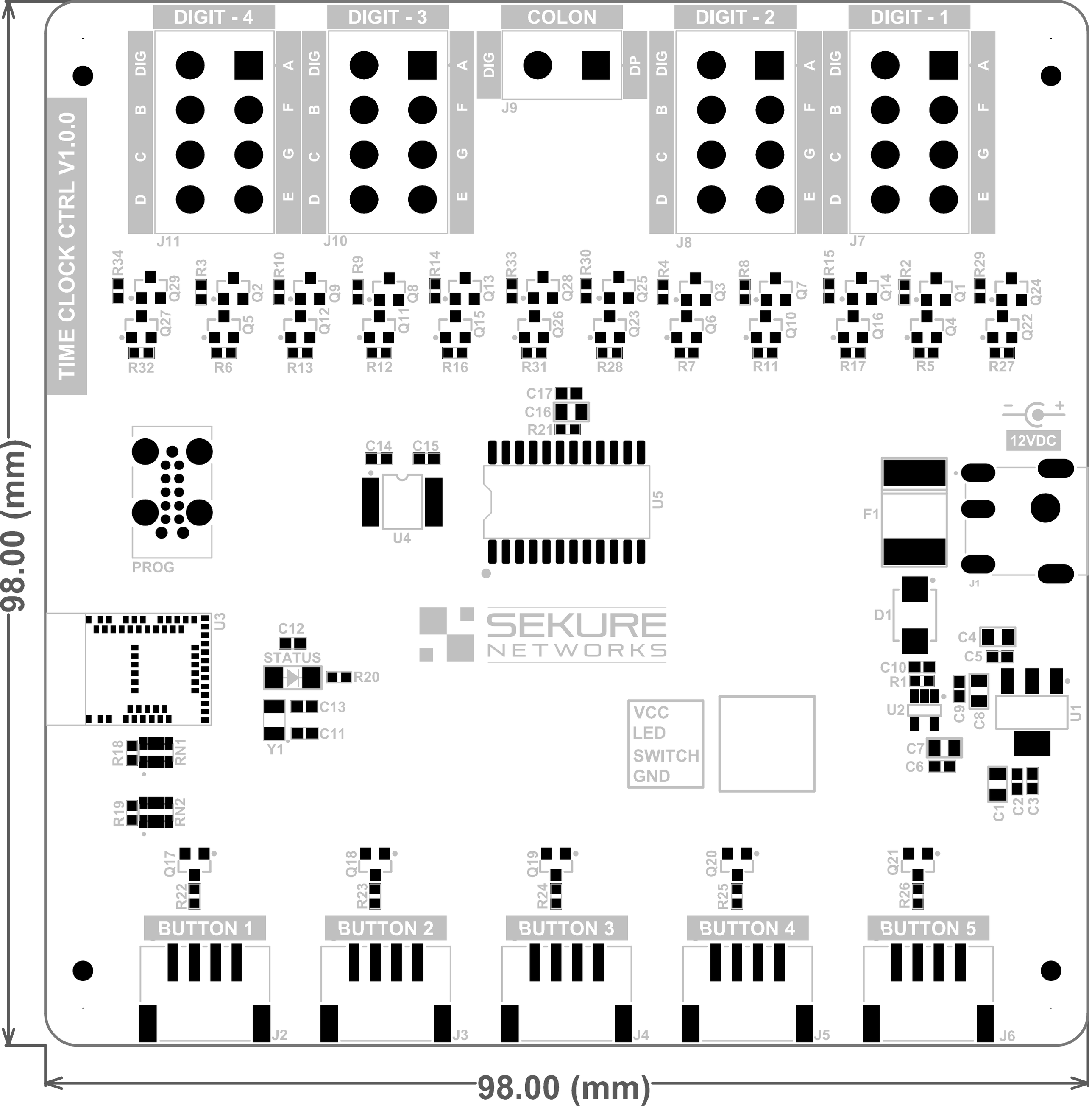
TIME CLOCK CTRL V1.0.0
DIGIT - 4
DIGIT - 3
COLON
DIGIT - 2
DIGIT - 1
DIG
A
B
F
C
G
D
E
DP
J11
J10
J9
J8
J7
R34 Q29 Q27 R32
R3 Q2 Q5 R6
R10 Q9 Q12 R13
R9 Q8 Q11 R12
R14 Q13 Q15 R16
R33 Q28 Q26 R31
R30 Q25 Q23 R28
R4 Q3 Q6 R7
R8 Q7 Q10 R11
R15 Q14 Q16 R17
R2 Q1 Q4 R5
R29 Q24 Q22 R27
C17
C16
R21
C14
C15
U4
U5
12VDC
PROG
F1
J1
D1
U3
C12
STATUS
R20
C13
C11
Y1
SEKURE
NETWORKS
C4
C5
C10
R1
U2
C9
C8
U1
C7
C6
C1
C2
C3
R18
RN1
R19
RN2
VCC
LED
SWITCH
GND
Q17 R22
Q18 R23
Q19 R24
Q20 R25
Q21 R26
BUTTON 1
BUTTON 2
BUTTON 3
BUTTON 4
BUTTON 5
J2
J3
J4
J5
J6
98.00 (mm)
98.00 (mm)

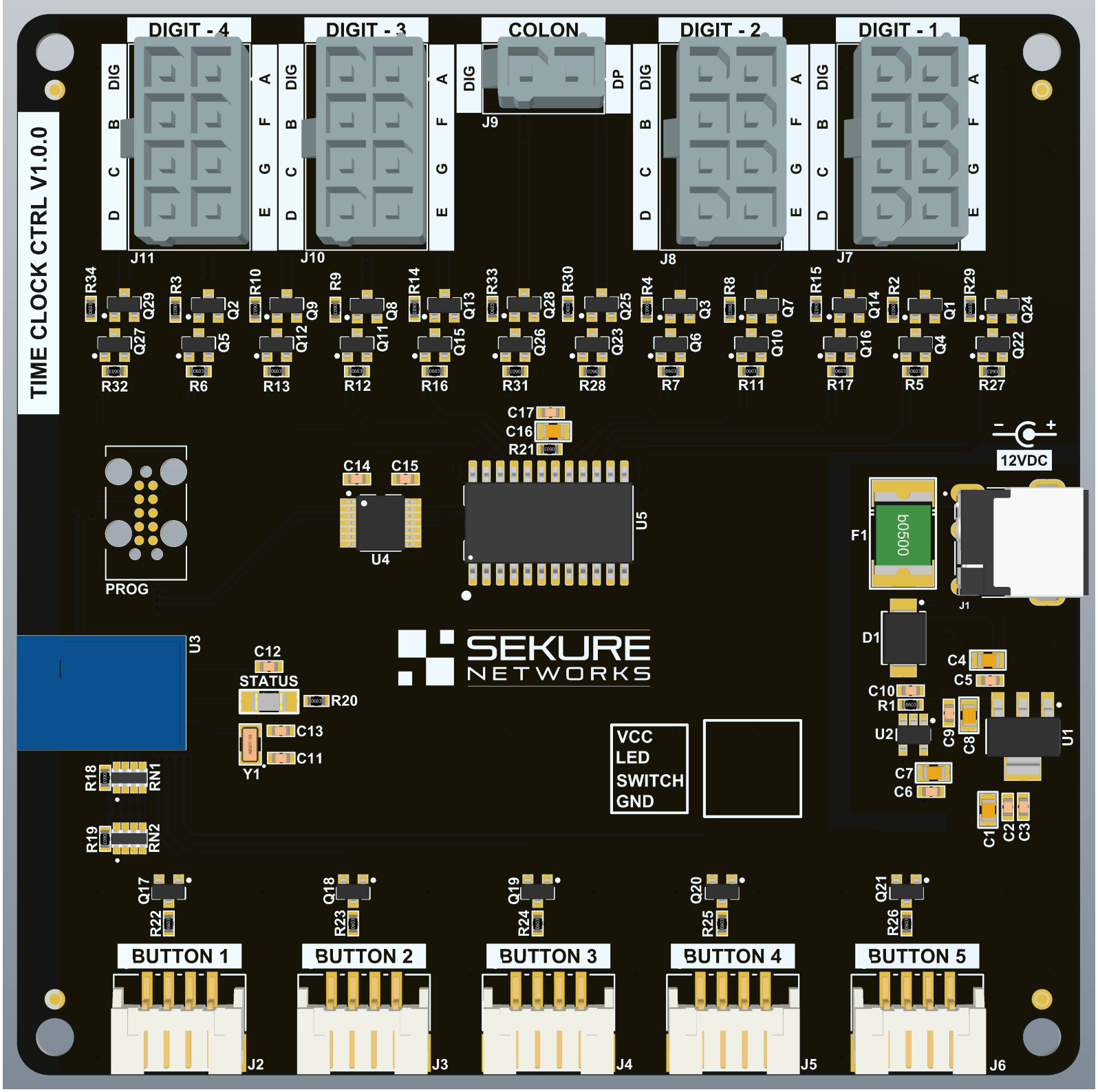
TIME CLOCK CTRL V1.0.0
DIGIT - 4
DIGIT - 3
COLON
DIGIT - 2
DIGIT - 1
DIG
A
B
F
C
G
D
E
DP
J11
J10
J9
J8
J7
R34
Q29
Q27
R32
R3
Q2
Q5
R6
R10
Q9
Q12
R13
R9
Q8
Q11
R12
R14
Q13
Q15
R16
R33
Q28
Q26
R31
R30
Q25
Q23
R28
R4
Q3
Q6
R7
R8
Q7
Q10
R11
R15
Q14
Q16
R17
R2
Q1
Q4
R5
R29
Q24
Q22
R27
C17
C16
R21
C14
C15
U4
U5
PROG
12VDC
F1
b0500
J1
D1
C4
C5
C10
R1
U2
C9
C8
U1
C7
C6
C1
C2
C3
U3
C12
STATUS
R20
C13
C11
Y1
R18
RN1
R19
RN2
SEKURE
NETWORKS
VCC
LED
SWITCH
GND
Q17
R22
Q18
R23
Q19
R24
Q20
R25
Q21
R26
BUTTON 1
BUTTON 2
BUTTON 3
BUTTON 4
BUTTON 5
J2
J3
J4
J5
J6