Revision History

Rev	ECN #	Approved Date	Approved by	Notes
V4.1	N/A	N/A	N/A	Added VCR sense for PMP41006 LLC control
V5.1	N/A	2023-03-14	N/A	changed to LMG3422 on LLC primary side added DCAEF circuits for testing

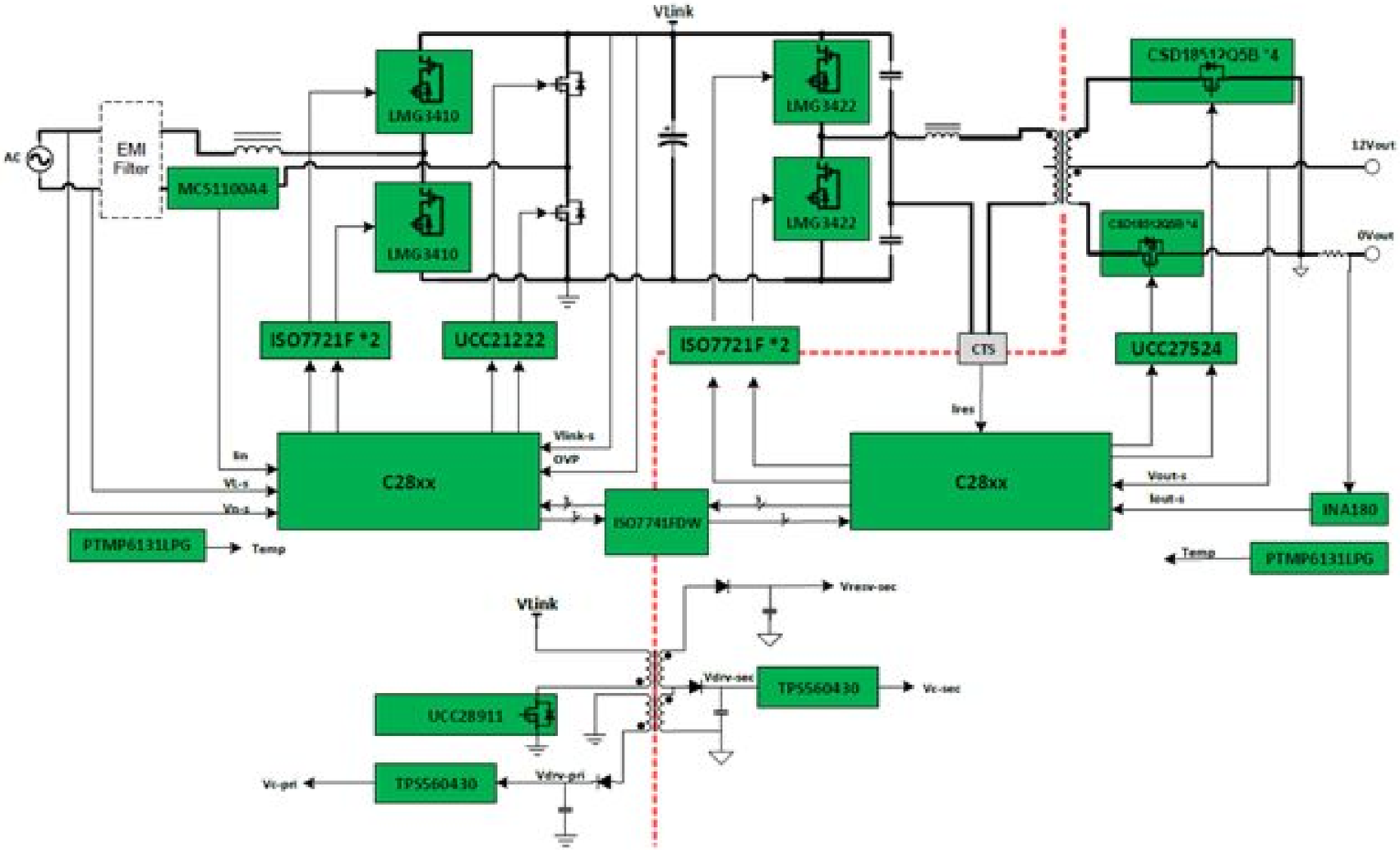

Texas Instruments and/or its licensors do not warrant the accuracy or completeness of this specification or any information contained therein. Texas Instruments and/or its licensors do not warrant that this design will meet the specifications, will be suitable for your application or fit for any particular purpose, or will operate in an implementation. Texas Instruments and/or its licensors do not warrant that the design is production worthy. You should completely validate and test your design implementation to confirm the system functionality for your application.

Orderable: ChangeMe in variant	Designed for: Public Release	Mod. Date: 3/14/2023
TID #: TIDA-010062	Project Title: 1kW Titanium Server PSU	
Number: PMP41006 Rev: V5.1	Sheet Title:	
SVN Rev: Not in version control	Assembly Variant: 001	Sheet: 1 of 10
Drawn By: Desheng Guo | Kevin Zeng	File: PMP41006_CoverSheet.SchDoc	Size: B
Engineer: Desheng Guo | Kevin Zeng	Contact: http://www.ti.com/support	

Texas Instruments
http://www.ti.com

© Texas Instruments 2019

PFC Power Stages

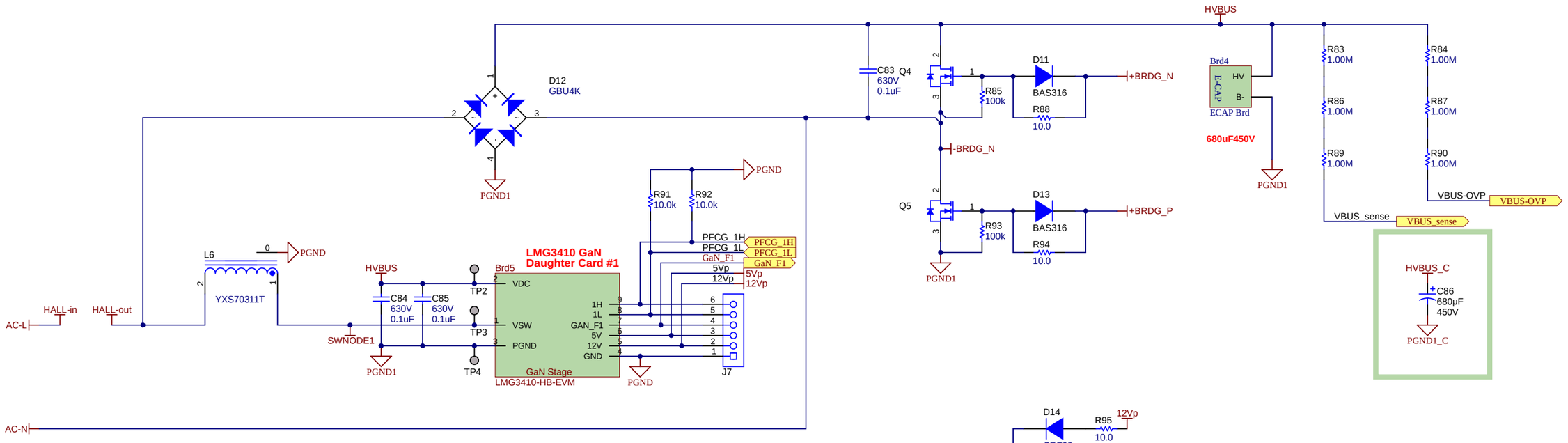

Texas Instruments and/or its licensors do not warrant the accuracy or completeness of this specification or any information contained therein. Texas Instruments and/or its licensors do not warrant that this design will meet the specifications, will be suitable for your application or fit for any particular purpose, or will operate in an implementation. Texas Instruments and/or its licensors do not warrant that the design is production worthy. You should completely validate and test your design implementation to confirm the system functionality for your application.

Orderable: ChangeMe in variant		Designed for: Public Release	Mod. Date: 3/14/2023
TID #: TIDA-010062		Project Title: 1kW Titanium Server PSU	
Number: PMP41006	Rev: V5.1	Sheet Title: PFC Power Stage	
SVN Rev: Not in version control		Assembly Variant: 001	Sheet: 2 of 10
Drawn By: Desheng Guo |Kevin Zeng		File: PMP41006_Power-PFC.SchDoc	Size: B
Engineer: Desheng Guo |Kevin Zeng		Contact: http://www.ti.com/support	http://www.ti.com

© Texas Instruments 2019

LLC Power Stages

Lr=13uH Lm=200uH Cr=66nF

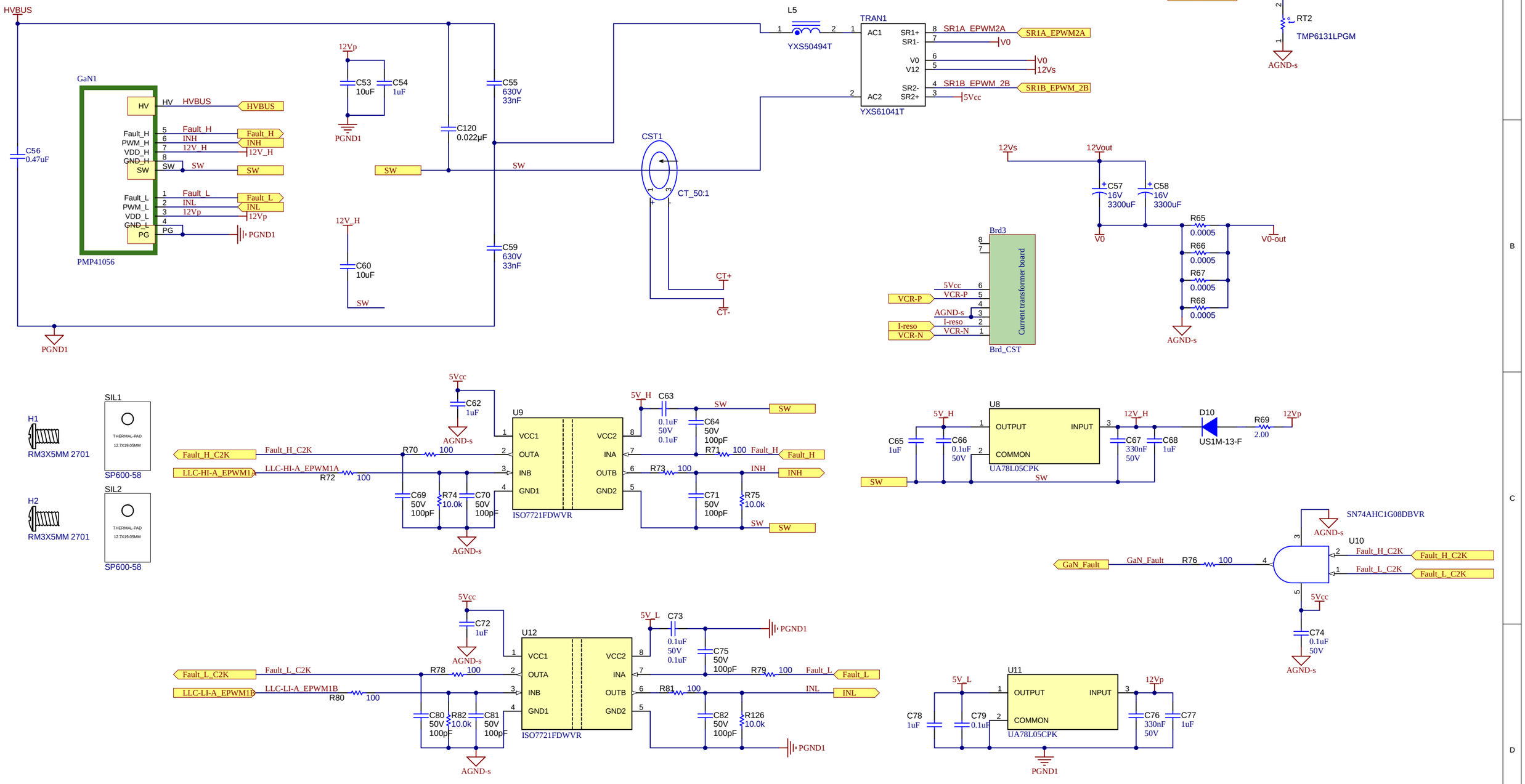

Orderable: ChangeMe in variant		Designed for: Public Release	Mod. Date: 3/14/2023
TID #: TIDA-010062		Project Title: 1kW Titanium Server PSU	
Number: PMP41006	Rev: V5.1	Sheet Title: LLC Power Stage	
SVN Rev: Not in version control		Assembly Variant: 001	Sheet: 3 of 10
Drawn By: Desheng Guo | Kevin Zeng		File: PMP41006_Power-LLC.SchDoc	Size: B
Engineer: Desheng Guo | Kevin Zeng		Contact: http://www.ti.com/support	

Texas Instruments and/or its licensors do not warrant the accuracy or completeness of this specification or any information contained therein. Texas Instruments and/or its licensors do not warrant that this design will meet the specifications, will be suitable for your application or fit for any particular purpose, or will operate in an implementation. Texas Instruments and/or its licensors do not warrant that the design is production worthy. You should completely validate and test your design implementation to confirm the system functionality for your application.

http://www.ti.com

© Texas Instruments 2019

Control for PFC

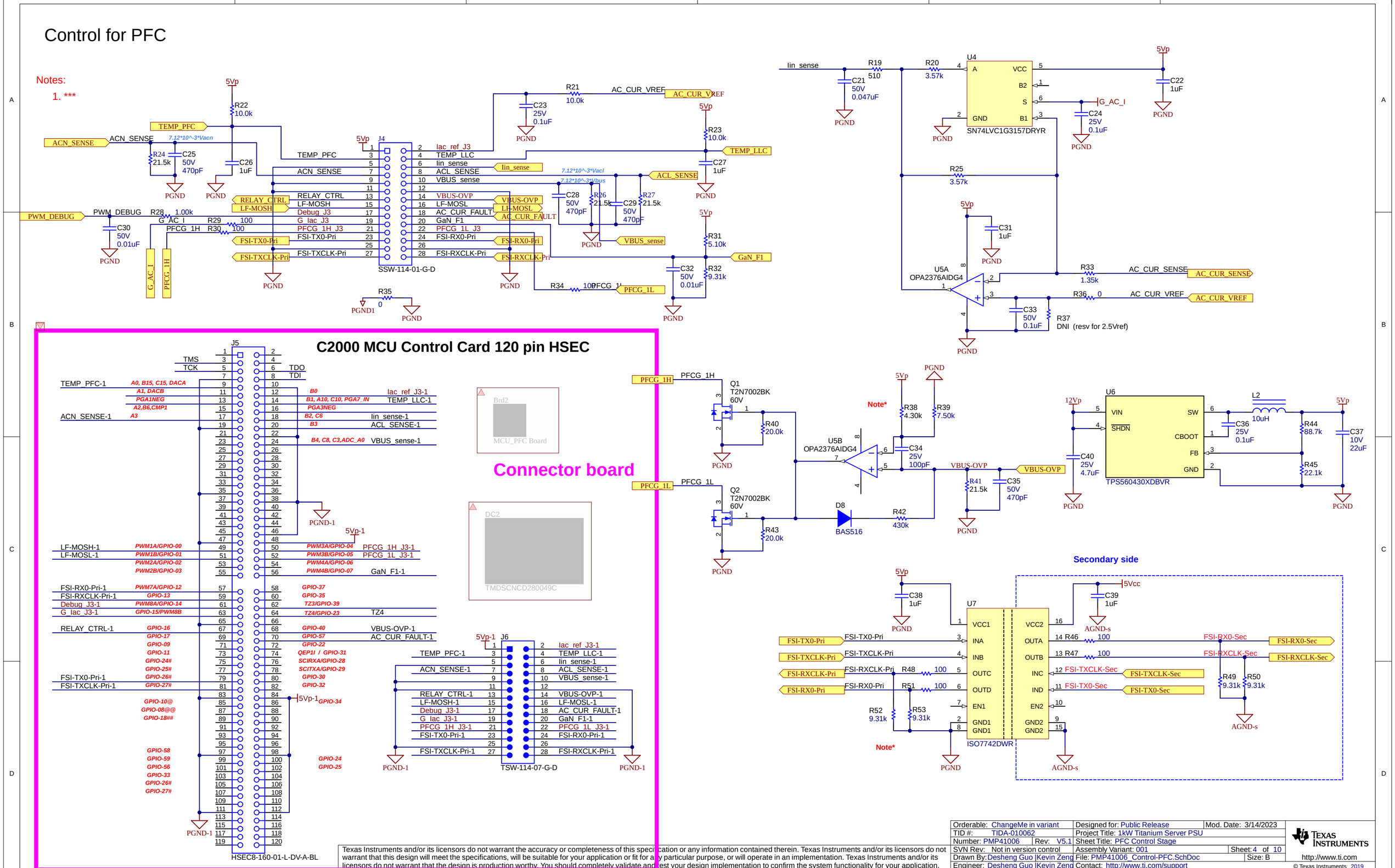

Texas Instruments and/or its licensors do not warrant the accuracy or completeness of this specification or any information contained therein. Texas Instruments and/or its licensors do not warrant that this design will meet the specifications, will be suitable for your application or fit for any particular purpose, or will operate in an implementation. Texas Instruments and/or its licensors do not warrant that the design is production worthy. You should completely validate and test your design implementation to confirm the system functionality for your application.

Orderable: ChangeMe in variant	Designed for: Public Release	Mod. Date: 3/14/2023
TID #: TIDA-010062	Project Title: 1kW Titanium Server PSU	
Number: PMP41006 Rev: V5.1	Sheet Title: PFC Control Stage	
SVN Rev: Not in version control	Assembly Variant: 001	Sheet: 4 of 10
Drawn By: Desheng Guo | Kevin Zeng	File: PMP41006_Control-PFC.SchDoc	Size: B
Engineer: Desheng Guo | Kevin Zeng	Contact: http://www.ti.com/support	

Texas Instruments
http://www.ti.com

© Texas Instruments 2019

LLC Control Stage

Notes:

1. ***

Text

Connector board

C2000 MCU Control Card 120 pin HSEC

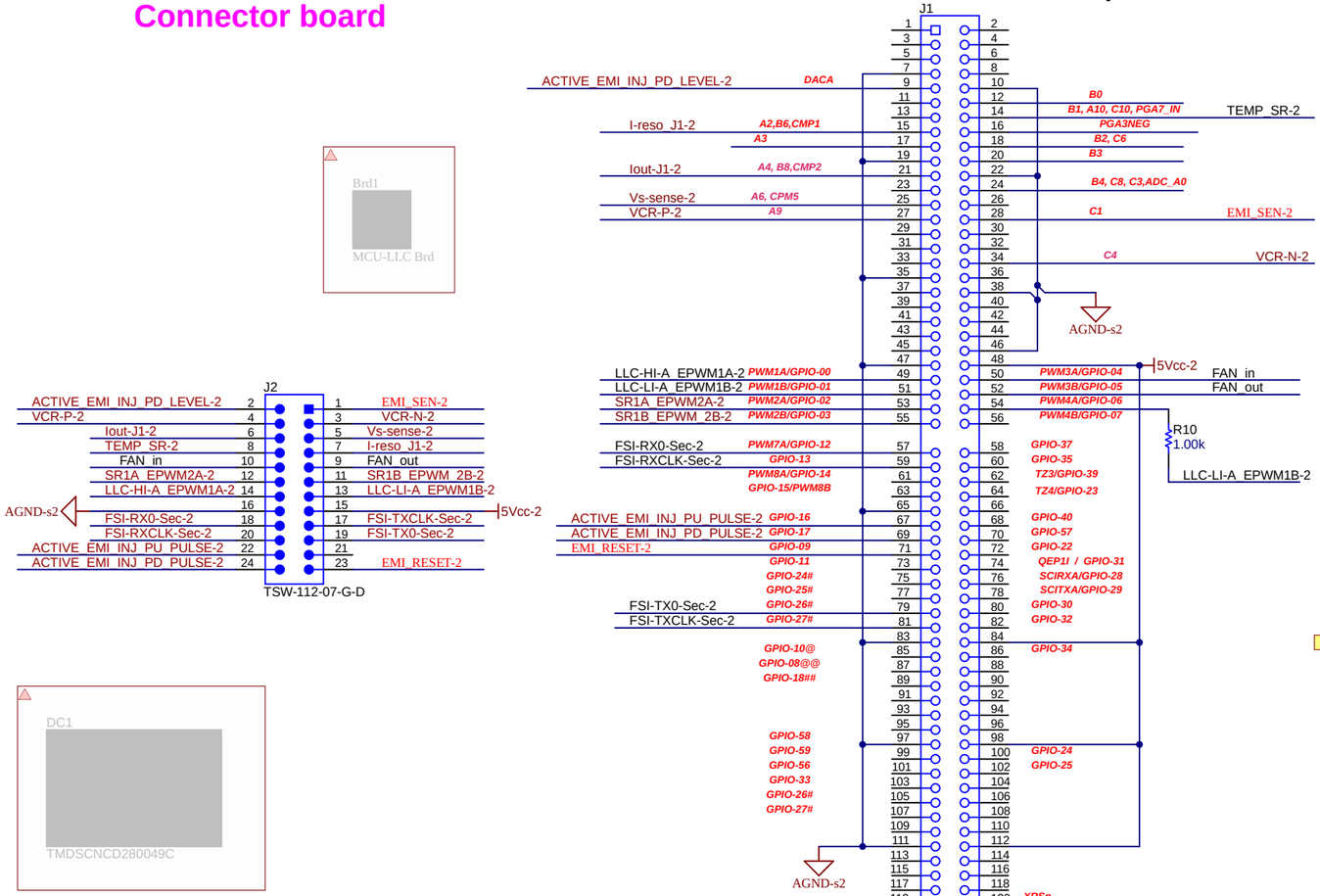

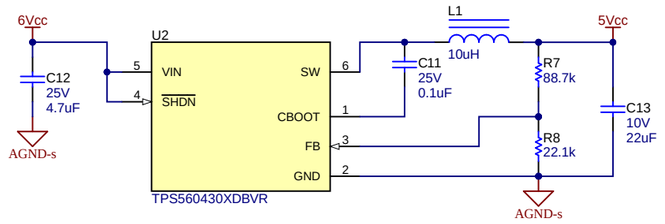

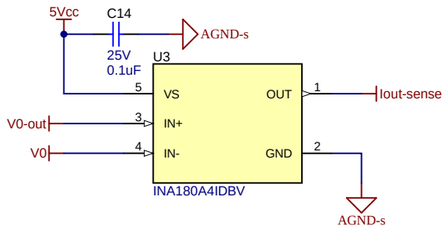

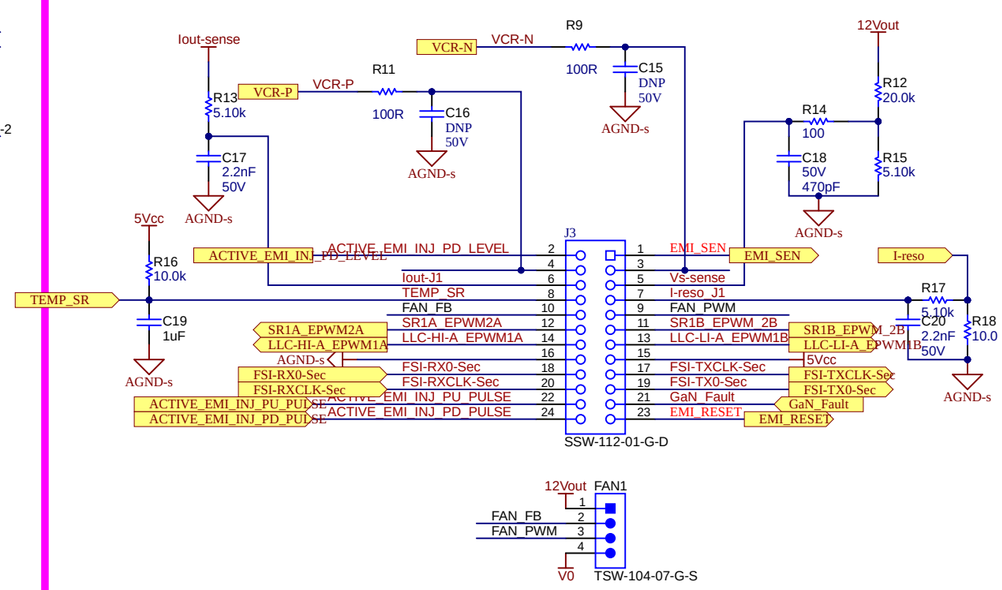

Texas Instruments and/or its licensors do not warrant the accuracy or completeness of this specification or any information contained therein. Texas Instruments and/or its licensors do not warrant that this design will meet the specifications, will be suitable for your application or fit for any particular purpose, or will operate in an implementation. Texas Instruments and/or its licensors do not warrant that the design is production worthy. You should completely validate and test your design implementation to confirm the system functionality for your application.

Orderable: ChangeMe in variant		Designed for: Public Release	Mod. Date: 3/14/2023
TID #: TIDA-010062		Project Title: 1kW Titanium Server PSU	
Number: PMP41006	Rev: V5.1	Sheet Title: LLC Control Stage	
SVN Rev: Not in version control		Assembly Variant: 001	Sheet: 5 of 10
Drawn By: Desheng Guo |Kevin Zeng		File: PMP41006_Control-LLC.SchDoc	Size: B
Engineer: Desheng Guo |Kevin Zeng		Contact: http://www.ti.com/support	

Texas Instruments
http://www.ti.com

© Texas Instruments 2019

LLC Current & VCR sense

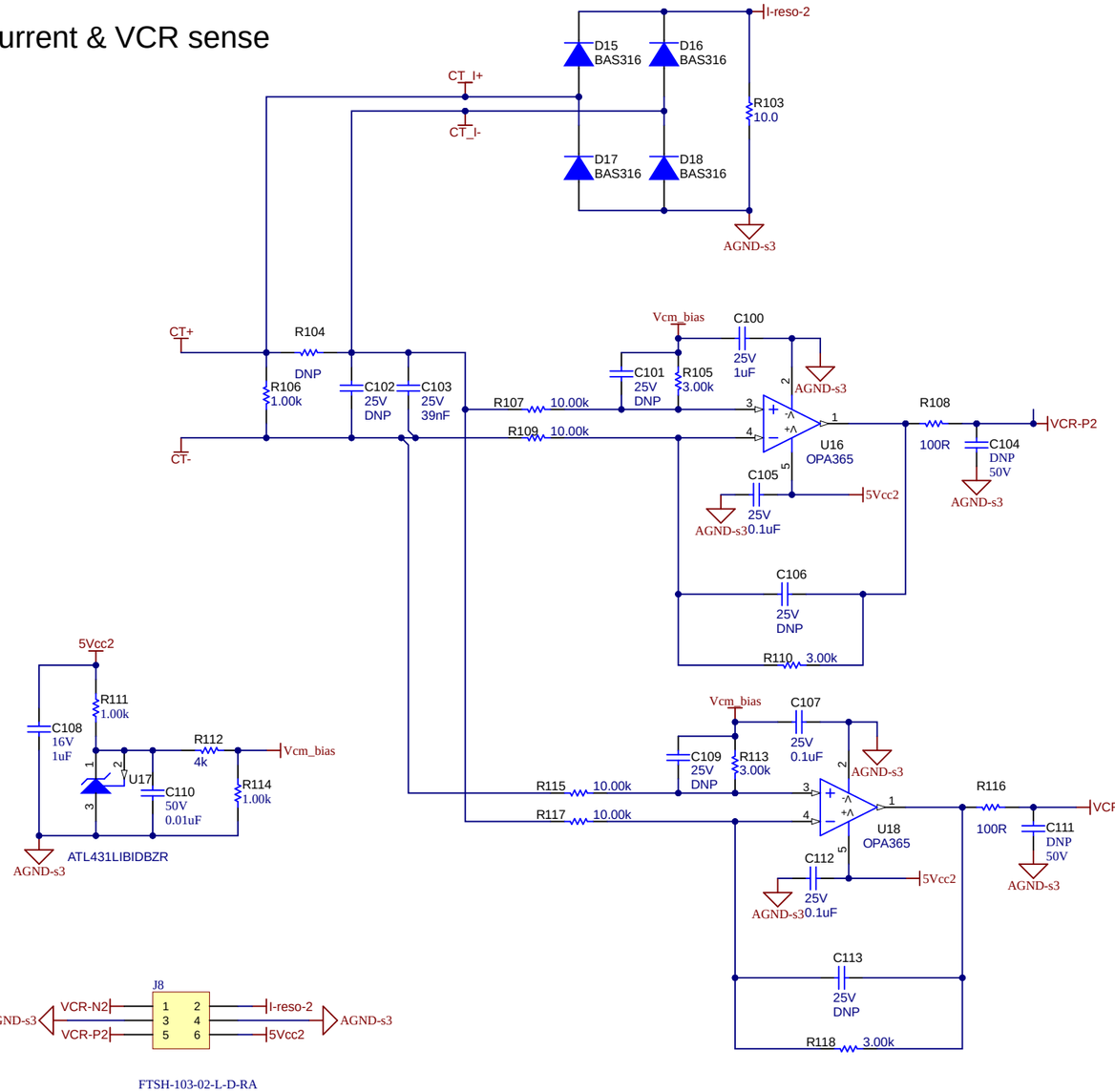

VCR sensing design process:

1, get the peak-peak voltage of the Cr (resonant CAP) @ min Vin and full load;

2, select the CT and its turn ratio N:1;

3, select Cs (sensing CAP) by keeping the CT within its volt-sec;

$$Vs\_pp = Vcr\_pp * Cr / (N*Cs)$$

4, select Ks (ratio of OPA circuits) to adjust the sensing volt to 2.0V max;

$$VCR\_sense\_p = Vcm + 0.5*Vcr\_pp * Cr / (N*Cs) *Ks$$

Min volt is clamped by Vcm, and Vcm is set at 0.5V by default.

Texas Instruments and/or its licensors do not warrant the accuracy or completeness of this specification or any information contained therein. Texas Instruments and/or its licensors do not warrant that this design will meet the specifications, will be suitable for your application or fit for any particular purpose, or will operate in an implementation. Texas Instruments and/or its licensors do not warrant that the design is production worthy. You should completely validate and test your design implementation to confirm the system functionality for your application.

Orderable: ChangeMe in variant	Designed for: Public Release	Mod. Date: 3/14/2023
TID #: TIDA-010062	Project Title: 1kW Titanium Server PSU	
Number: PMP41006 Rev: V5.1	Sheet Title:	
SVN Rev: Not in version control	Assembly Variant: 001	Sheet: 6 of 10
Drawn By: Desheng Guo | Kevin Zeng	File: PMP41006_CTS-VCR.SchDoc	Size: B
Engineer: Desheng Guo | Kevin Zeng	Contact: http://www.ti.com/support	

Texas Instruments
http://www.ti.com

© Texas Instruments 2019

Discrete Canceller Active EMI Filter

Discrete Canceller Inject Daughter Card with Non-Automotive Devices

Connect inject card close to high-frequency switching bridge

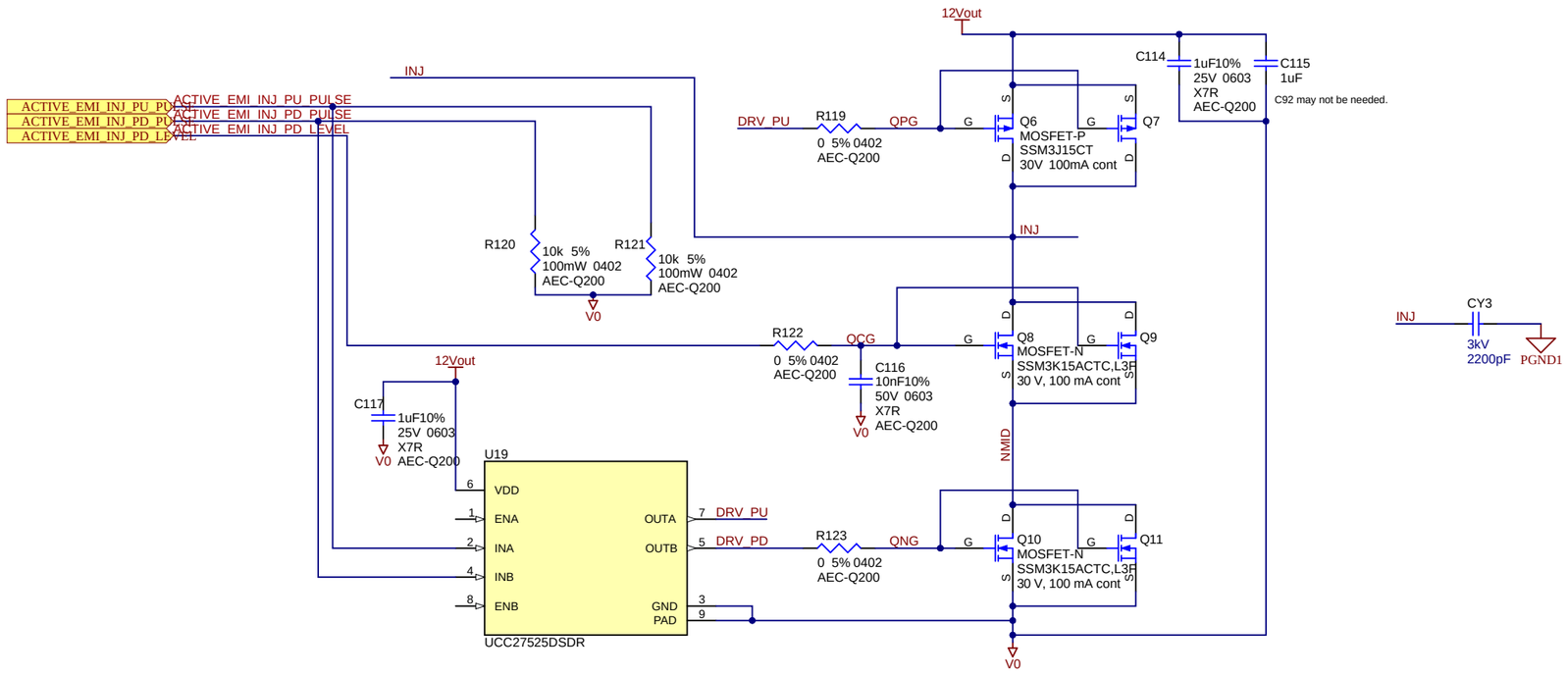

C2000 Sense Interface

Sense Card

Connect sense card close to C2000 control card

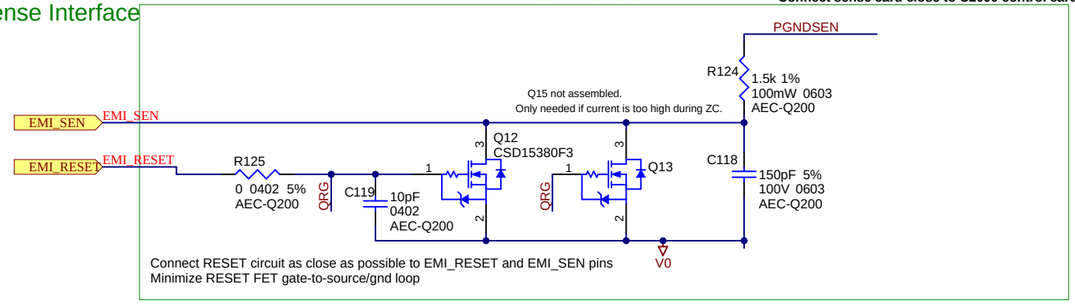

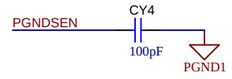

Texas Instruments and/or its licensors do not warrant the accuracy or completeness of this specification or any information contained therein. Texas Instruments and/or its licensors do not warrant that this design will meet the specifications, will be suitable for your application or fit for any particular purpose, or will operate in an implementation. Texas Instruments and/or its licensors do not warrant that the design is production worthy. You should completely validate and test your design implementation to confirm the system functionality for your application.

Orderable: ChangeMe in variant	Designed for: Public Release	Mod. Date: 3/14/2023
TID #: TIDA-010062	Project Title: 1kW Titanium Server PSU	
Number: PMP41006 Rev: V5.1	Sheet Title:	
SVN Rev: Not in version control	Assembly Variant: 001	Sheet: 7 of 10
Drawn By: Desheng Guo |Kevin Zeng	File: PMP41006-DCAEF.SchDoc	Size: A3
Engineer: Desheng Guo |Kevin Zeng	Contact: http://www.ti.com/support	

Texas Instruments
http://www.ti.com

© Texas Instruments 2019

EMI Part

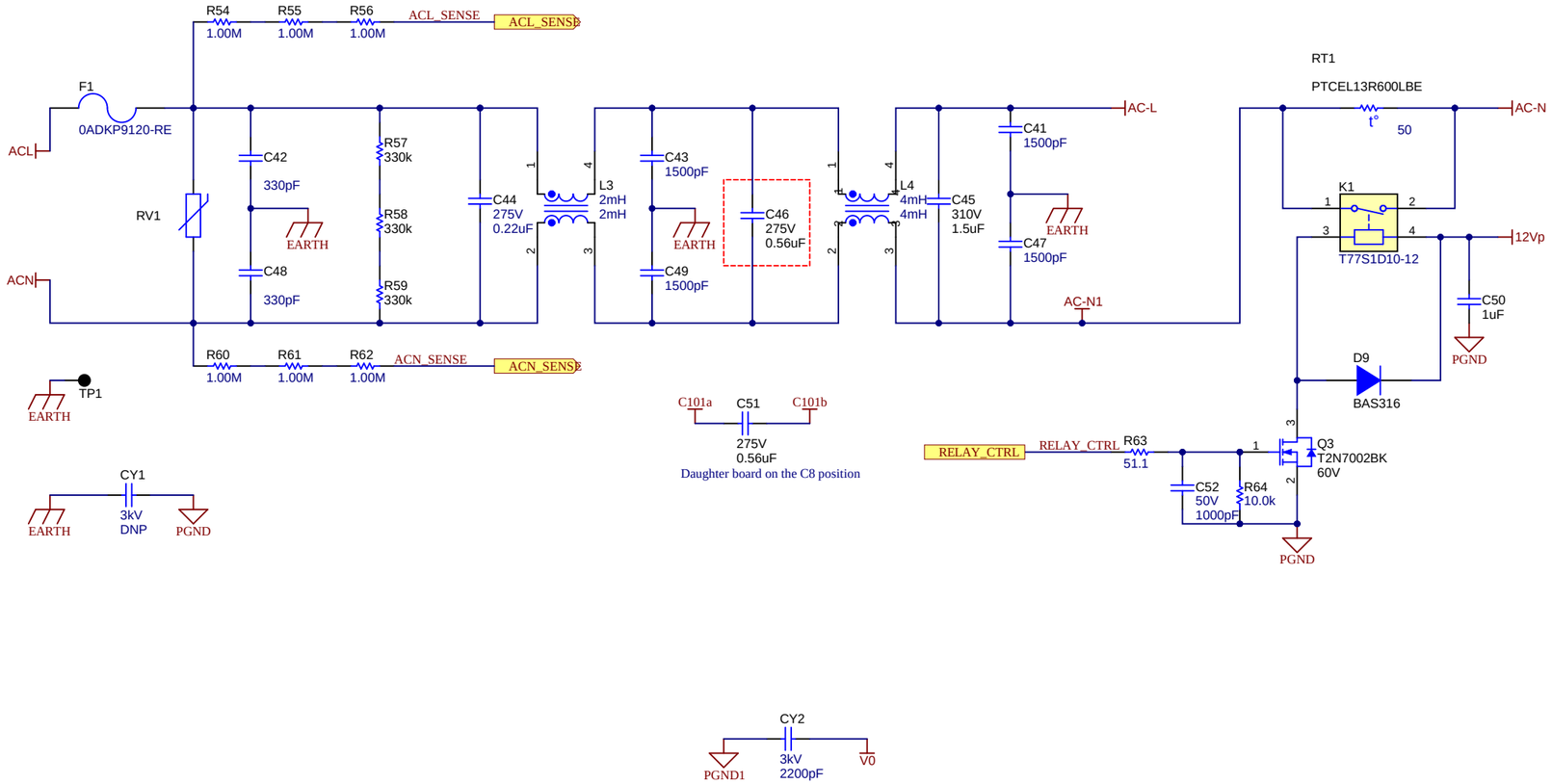

Texas Instruments and/or its licensors do not warrant the accuracy or completeness of this specification or any information contained therein. Texas Instruments and/or its licensors do not warrant that this design will meet the specifications, will be suitable for your application or fit for any particular purpose, or will operate in an implementation. Texas Instruments and/or its licensors do not warrant that the design is production worthy. You should completely validate and test your design implementation to confirm the system functionality for your application.

Orderable: ChangeMe in variant	Designed for: Public Release	Mod. Date: 3/14/2023
TID #: TIDA-010062	Project Title: 1kW Titanium Server PSU	
Number: PMP41006 Rev: V5.1	Sheet Title: EMI Stage	
SVN Rev: Not in version control	Assembly Variant: 001	Sheet: 8 of 10
Drawn By: Desheng Guo | Kevin Zeng	File: PMP41006_EMI.SchDoc	Size: B
Engineer: Desheng Guo | Kevin Zeng	Contact: http://www.ti.com/support	

Texas Instruments
http://www.ti.com

© Texas Instruments 2019

Aux Power Stage

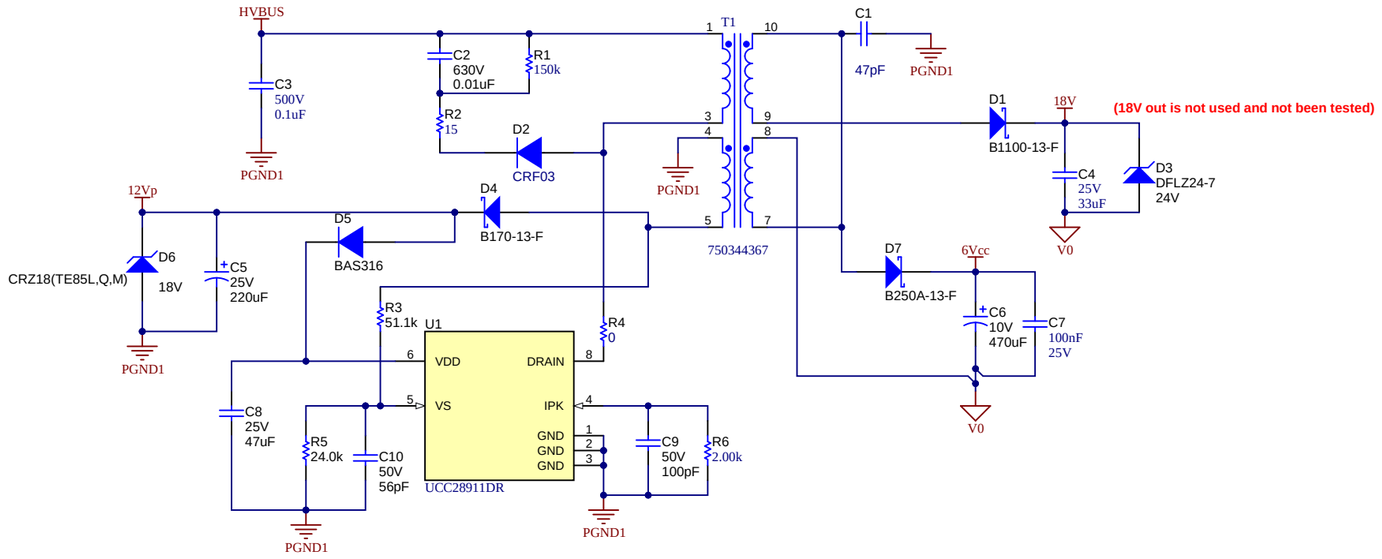

LOGO1

DANGER HIGH VOLTAGE

LOGO2

CAUTION HOT SURFACE

Texas Instruments and/or its licensors do not warrant the accuracy or completeness of this specification or any information contained therein. Texas Instruments and/or its licensors do not warrant that this design will meet the specifications, will be suitable for your application or fit for any particular purpose, or will operate in an implementation. Texas Instruments and/or its licensors do not warrant that the design is production worthy. You should completely validate and test your design implementation to confirm the system functionality for your application.

Designed for: Public Release		Mod. Date: 3/14/2023	
Project Title: 1kW Titanium Server PSU			
Number: PMP41006	Rev: V5.1	Sheet Title: Bias Power Stage	
SVN Rev: Not in version control		Assembly Variant: 001	Sheet: 9 of 10
Drawn By: Desheng Guo		File: PMP41006_Bias.SchDoc	Size: B
Engineer: Desheng Guo |Kevin Zeng		Contact: http://www.ti.com/support	http://www.ti.com

© Texas Instruments 2019

FID1 FID2 FID3

PCB Number: PMP41006
PCB Rev: V5.1

Variant/Label Table	
Variant	Label Text
001	TIDA-010062
002	PMP41006

LBL1
PCB Label
THT-14-423-10
Size: 0.65" x 0.20 "

ZZ1
Label Assembly Note
This Assembly Note is for PCB labels only

ZZ2
Assembly Note
These assemblies are ESD sensitive, ESD precautions shall be observed.

ZZ3
Assembly Note
These assemblies must be clean and free from flux and all contaminants. Use of no clean flux is not acceptable.

ZZ4
Assembly Note
These assemblies must comply with workmanship standards IPC-A-610 Class 2, unless otherwise specified.

Texas Instruments and/or its licensors do not warrant the accuracy or completeness of this specification or any information contained therein. Texas Instruments and/or its licensors do not warrant that this design will meet the specifications, will be suitable for your application or fit for any particular purpose, or will operate in an implementation. Texas Instruments and/or its licensors do not warrant that the design is production worthy. You should completely validate and test your design implementation to confirm the system functionality for your application.

Orderable: ChangeMe in variant	Designed for: Public Release	Mod. Date: 3/14/2023
TID #: TIDA-010062	Project Title: 1kW Titanium Server PSU	
Number: PMP41006 Rev: V5.1	Sheet Title:	
SVN Rev: Not in version control	Assembly Variant: 001	Sheet: 10 of 10
Drawn By:	File: PMP41006_Hardware.SchDoc	Size: B
Engineer: Desheng Guo |Kevin Zeng	Contact: http://www.ti.com/support	

Texas Instruments
http://www.ti.com

© Texas Instruments 2019