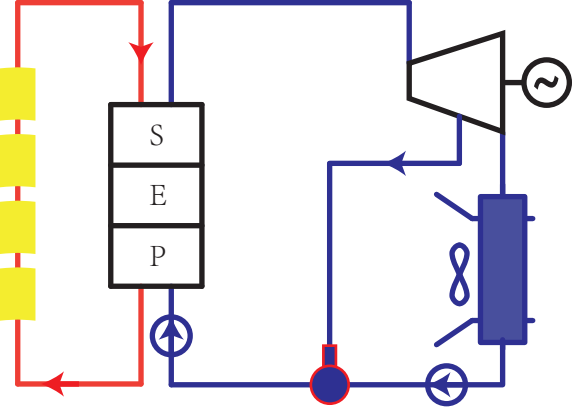

Parabolic trough system

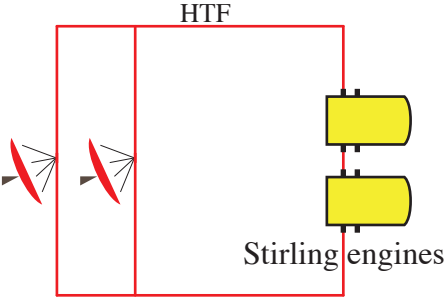

Parabolic dish system