# Vietnamese Text Segmentation as Supervised Learning Task

**Dang Huu Tien**[1]

[1]University of Engineering and Technology, VNU,H

17021059@vnu.edu.vn

## 1. Introduction

*Text segmentation* is the task of dividing text into segments, such that each segment is topically coherent, and cutoff points indicate a change of topic. When dividing the text into segments, we can understand more information about the context of segments overall thematic structure of the document, this information is very useful for further text analysis tasks, such as discourse analysis, information retrieval and document summarization.

## 2. Problem Statement

In this project, I will treat this problem as a *Supervised Learning* machine learning problem.
Let $x$ is the input document, $x$ contain a sequence of $n$ sentences, i.e $S_1, S_2, ..S_n$ and the label $y = Y_1, Y_2, .., Y_n$ is a binary vector. Where $Y_i$ denotes whether $X_i$ ends a segment.

- Input : Vietnamese documents that can be split into segments of topics.
- Output : The sequence y to determine the end of each segment.

Sample of segments of a document from Wikipedia

| Segment | Sentences | Label |
|---|---|---|
| Giới thiệu | Tiếng Việt còn gọi là tiếng Việt Nam, hay Việt ngữ. | 0 |
| | Đây là tiếng mẹ đẻ của 85% dân cư Việt Nam. | 0 |
| | ... | 0 |
| | Tuy nhiên chưa có bất kỳ văn bản nào ở cấp nhà nước quy định giọng chuẩn và quốc tự của Tiếng Việt. | 1 |
| Xếp loại | Với những cơ sở khoa học gần đây được đa số các nhà ngôn ngữ học thừa nhận, tiếng Việt thuộc hệ Nam Á ở khu vực Đông Nam Á hiện nay, có quan hệ gần gũi với tiếng Mường. | 0 |
| | Xa hơn là các thứ tiếng thuộc ngôn ngữ Môn-Khmer. | 0 |
| | Những ngôn ngữ này có chung một từ vựng căn bản. | 0 |
| | Thí dụ, từ "tay"trong tiếng Việt tương đương trong tiếng Mường là "thay", trong tiếng Khmer là "đay"và trong tiếng Môn là "tai". | 1 |

## 3. Related Work

Previous topic segmentation methods fall into two groups: Similarity based, Lexical chain based, and Feature based.

- *Lexical Cohesion Based* : One feature of the text is cohesion, which requires that the later forms a unified segment, not unrelated sentences. Cohesion is a term

involve semantic concept. It brings in the relationship between the meaning of the words.
In this approach, we can calculate the distance between sentences, then use those number to predict the ending of the segment. For example, the *Textiling* system[1]: use the cousin measure to calculate the similarity of two sentences. Slide a window through the text, the similarity in the window will be calculated based on the similarity between sentences inside the window. Then, based on the sequence of window similarity, we create a graph of similarity. We can say that the peaks of the graph will be inside the segment. And the valleys of the graph indicate the changing of the segment as well as the topic.

- *Model Based* : This approach is to use machine learning model to automatically extract the features from the document. A typical example of this method is Bayesian text segmentation methods[2, 3] which create a generative probabilistic model for documents. The document will be defined as a combination of segments, each segment is about one topic or context, topics can be sampled from some kind of distribution, and each topic can belong to a distribution.
  Another noteworthy example of this method is GRAPHSEG[4], an unsupervised graph method. It works by building a graph and using sentences as nodes, using the similarity of two sentences as the edge between them. Then, by finding the maximum group of related sentences, we can split the document into segments.

## 4. Data Preparation

### 4.1. Data construction

In this project, I have created a new dataset. It is a collection of 66050 Vietnamese Wikipedia documents, and their hierarchical segmentation, that is defined in wiki's table of contents. The dataset contains 6.520.892 sentences with an average 22.18 words per sentence.
To generate that dataset, I implemented some preprocessing steps for each Wikipedia document:
• Removed all images, tables, and other non-text elements.
• Removed all segment which has only one sentence, documents have no more than three segments, and documents that almost all segments are removed.
• Use the PUNKT tokenizer of NLTK library sentences to split each segment into sentences.
Each Wikipedia document, the author will write the text in the term of sections. I define each sections is one segment on our dataset. This dataset is good for topic segmentation because it is nature, well divided into segments and contain almost every domain.

### 4.2. Data annotation

Each document contains several segments. There is a line between two segments starts with "========", which denotes the point of changing topic. That line also contains the index of the segment and name of the topic refered from Wikipedia.

Example of tagged document from Wikipedia in the dataset:

========,1,preface.
USS "Colhoun"(DD-85/APD-2) là một tàu khu trục thuộc lớp "Wickes"của Hải quân Hoa Kỳ trong giai đoạn Chiến tranh Thế giới thứ nhất, và tiếp tục phục vụ như một tàu vận chuyển cao tốc với ký hiệu lườn APD-2 trong Chiến tranh Thế giới thứ hai. Nó là chiếc tàu chiến đầu tiên của Hải quân Hoa Kỳ được đặt tên theo Chuẩn đô đốc Edmund Colhoun.
========,2,Thiết kế và chế tạo.
"Colhoun"được đặt lườn tại xưởng đóng tàu của hãng Fore River Shipbuilding Company ở Quincy, Massachusetts vào ngày 19 tháng 9 năm 1917. Nó được hạ thủy vào ngày 21 tháng 2 năm 1918; được đỡ đầu bởi cô A. Colhoun, được đưa ra hoạt động vào ngày 13 tháng 6 năm 1918 dưới quyền chỉ huy của hạm trưởng, Trung tá Hải quân B. Wygant, và trình diện để hoạt động cùng Hạm đội Đại Tây Dương Hoa Kỳ.

## 5. Approach Method

The model is composed of a hierarchy of two sub-networks both based on LSTM architecture.
The lower-level sub-network is a two-layer bidirectional LSTM that generates sentence representations: for each sentence $S_i$ , the network consumes the words $W_1^i, W_2^i, .., W_k^i$ of $S_i$ one by one, and the final sentence representation $e_i$ is computed by max-pooling over the LSTM outputs.
The higher-level sub-network is the segmentation prediction network. This sub-network takes a sequence of sentence embeddings $e_1, ..., e_n$ as input, and feeds them into a two-layer bidirectional LSTM. Then apply a fully-connected layer on each of the LSTM outputs to obtain a sequence of n vectors in $R^2$ . Ignore the last vector (for $e_n$), and apply a softmax function to obtain $n-1$ segmentation probabilities.

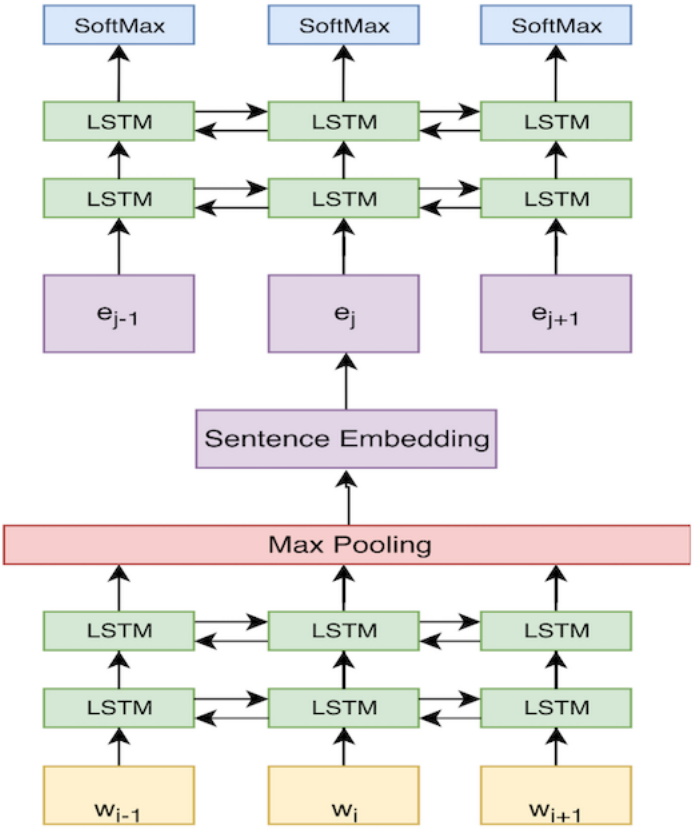

## 6. Training and Inference

For each sentence $S_i$ , I predict the probability of segment'end $p_i$ . For $n$ sentences document, the cost function is the cross-entropy over $n-1$ sentences.

$$J(\theta) = \sum_{i=1}^{n-1} -y_i \log p_i - (1-y_i)\log(1-p_i)$$

When training, the model's input is a sentence represented by the sequence of word embeddings, and output is the probability $p_i$ . To label the sentence, I will find a threshold $T$, if $p_i$ is greater than the threshold, then it is labeled 1. The threshold $T$ is computed based on the validation dataset. After training the model, I apply the model to the validation set.

## 7. Measurement

To evaluate the model, I use the $p_k$ metric as a measure of the test accuracy. $p_k$ is the probability that when passing as a window of size $k$ over sentences, the sentences at the boundaries of the window will be incorrectly classified as belonging to the same segment (or vice versa). This measure is a probability and therefore a real number between zero and one.

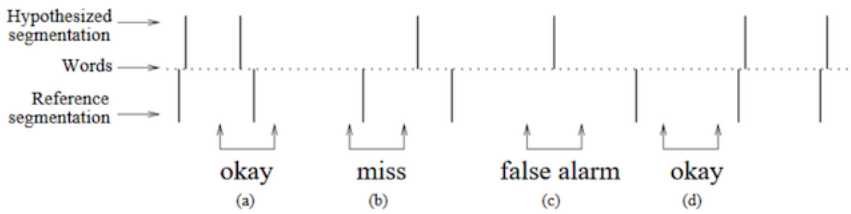


Failure modes of a segmentation decision procedure. The lower vertical lines represent "true" segment breaks,and the upper vertical lines represent hypothesized breaks. A fixed-width window slid across the corpus yield sone of the following outcomes at each step: acceptable(a and d), in which a hypothesized break and a true break are both present or both absent within the window; false negative(b), in which a true break is present but not a hypothesized break; and false alarm(c), in which casea hypothesized break is present but not a true break.
The number $p_k(ref, hyp)$ is the probability that randomly choose two sentences (whichs have $k$ sentences between them) of a segment is inconsistently classified; which means, the pair lies in the same segment for one way segmentation, while in the other way, the pair is separated by a segment boundary. This probability can be compute by two conditional probabilities, which are called the miss and false alarm probabilities:

$$\begin{aligned}
&p(\text{error} \,|\, \texttt{ref}, \texttt{hyp}, k) = \\
&\quad p(\text{miss} \,|\, \texttt{ref}, \texttt{hyp}, \text{different } \texttt{ref} \text{ segments}, k)\, p(\text{different } \texttt{ref} \text{ segments} \,|\, \texttt{ref}, k) \\
&+ p(\text{false alarm} \,|\, \texttt{ref}, \texttt{hyp}, \text{same } \texttt{ref} \text{ segment}, k)\, p(\text{same } \texttt{ref} \text{ segment} \,|\, \texttt{ref}, k)
\end{aligned}$$

## 8. Results and Conclusions

The following table is the results I got after applying model on the wikipedia dataset.

| Measurements | Results |
|---|---|
| Accuracy | 0.9517 |
| $P_k$ | 0.3384 |

*Futute work*

There are some problems of my project that can be improved. Firstly, the data is only from Wikipedia, which is only written by high-educated people. Since we want to use topic segmentation task on digital text, I want to collect more data from another source such as forums, messaging or even text of voice call. Secondly, I want to use my model for real-world application, such as chatbot or visual assistant. Many of those applications can be improved by detecting the changing context (or topic) of the user text.

**References**

1. Marti A. Hearst. 1997. TextTiling: segmenting text into multi-paragraph subtopic passages. Comput. Linguist., 23(1):33–64.

2.Harr Chen, SRK Branavan, Regina Barzilay, and David R Karger. 2009. Global models of document structure using latent permutations. In Proceedings of Human Language Technologies: The 2009 Annual Conference of the North American Chapter of the Association for Computational Linguistics. Association for Computational Linguistics, pages 371–379.

3. Martin Riedl and Chris Biemann. 2012. Topictiling: a text segmentation algorithm based on lda. In Proceedings of ACL 2012 Student Research Workshop. Association for Computational Linguistics, pages 37–42.

4. Goran Glava˘s, Federico Nanni, and Simone Paolo Ponzetto. 2016. Unsupervised text segmentation using semantic relatedness graphs. Association for Computational Linguistics.