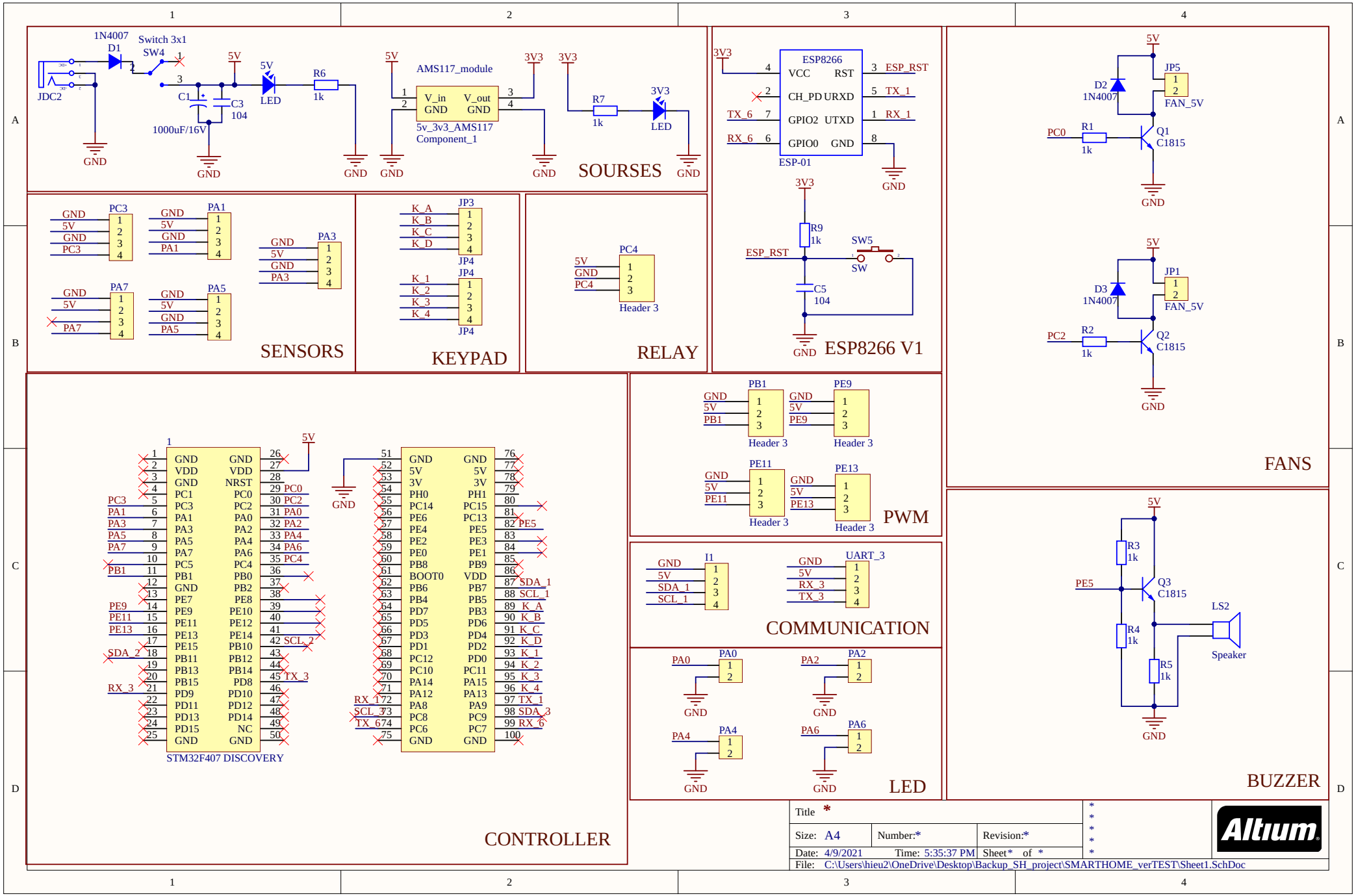
SOURSES
JDC2
1N4007
D1
Switch 3x1
SW4
C1
1000uF/16V
C3
104
5V
LED
R6
1k
AMS117_module
V_in
V_out
GND
5v_3v_AMS117
Component_1
3V3
R7
1k
LED
GND
SENSORS
PC3
PA1
PA3
PA7
PA5
KEYPAD
JP3
JP4
K_A
K_B
K_C
K_D
K_1
K_2
K_3
K_4
RELAY
PC4
Header 3
ESP8266 V1
ESP8266
VCC
RST
CH_PD
URXD
GPIO2
UTXD
GPIO0
GND
ESP_RST
TX_1
RX_1
TX_6
RX_6
ESP-01
R9
1k
SW5
SW
C5
104
FANS
JP5
JP1
FAN_5V
D2
1N4007
D3
1N4007
PC0
PC2
R1
R2
1k
Q1
C1815
Q2
C1815
PWM
PB1
PE9
PE11
PE13
Header 3
COMMUNICATION
I1
UART_3
SDA_1
SCL_1
RX_3
TX_3
LED
PA0
PA2
PA4
PA6
BUZZER
R3
1k
R4
1k
R5
1k
Q3
C1815
PE5
LS2
Speaker
CONTROLLER
STM32F407 DISCOVERY
GND
VDD
NRST
PC1
PC0
PC2
PA0
PA2
PA4
PA6
PC5
PC4
PB0
PB2
PE8
PE10
PE12
PE14
PB10
PB12
PB14
PD8
PD10
PD12
PD14
NC
PB1
PE7
PE9
PE11
PE13
PE15
PB11
PB13
PB15
PD9
PD11
PD13
PD15
5V
3V
PH0
PH1
PC14
PC15
PE6
PC13
PE4
PE5
PE2
PE3
PE0
PE1
PB8
PB9
BOOT0
VDD
PB6
PB7
PB4
PB5
PD7
PB3
PD5
PD6
PD3
PD4
PD1
PD2
PC12
PD0
PC10
PC11
PA14
PA15
PA12
PA13
PA8
PA9
PC8
PC9
PC6
PC7
SCL_2
SDA_2
TX_3
RX_3
RX_1
SCL_3
TX_6
SDA_3
RX_6
Title *
Size: A4
Number:*
Revision:*
Date: 4/9/2021
Time: 5:35:37 PM
Sheet* of *
File: C:\Users\hieu2\OneDrive\Desktop\Backup_SH_project\SMARTHOME_verTEST\Sheet1.SchDoc
Altium