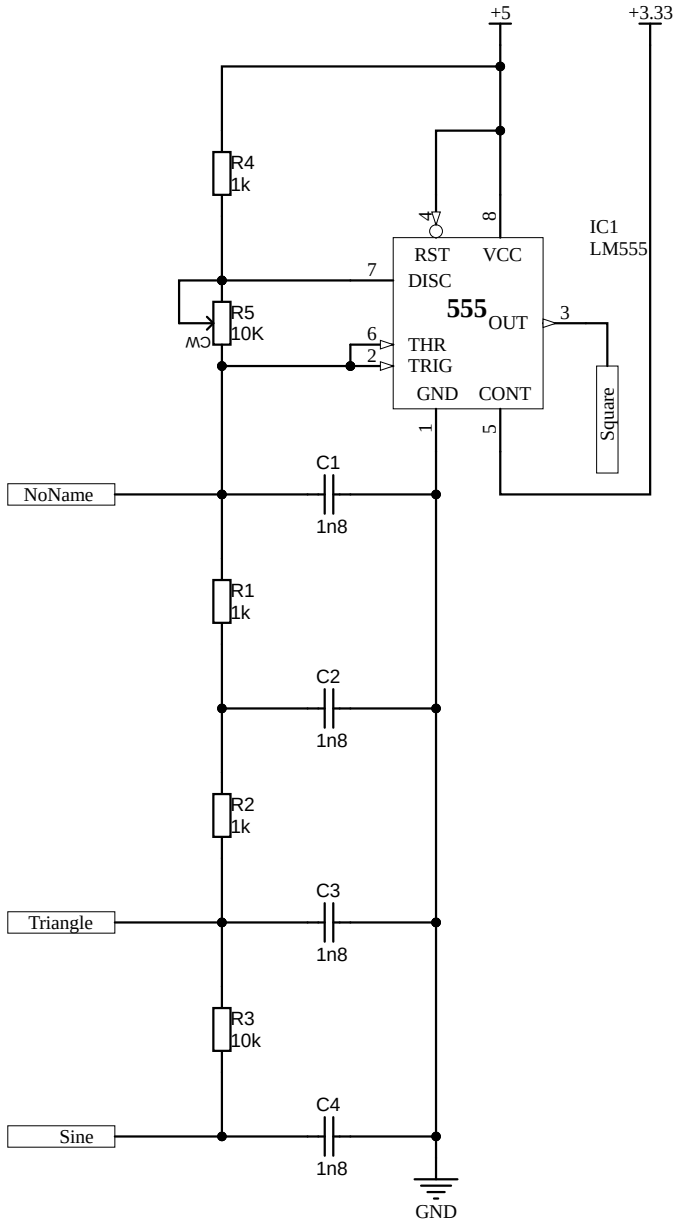

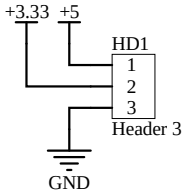

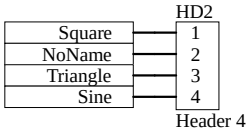

Title		
Size A	Number	Revision
Date: 5/08/2023	Sheet of	
File: D:\0. Data Tools\..\WaveGenerator.SchDoc	Drawn By:	