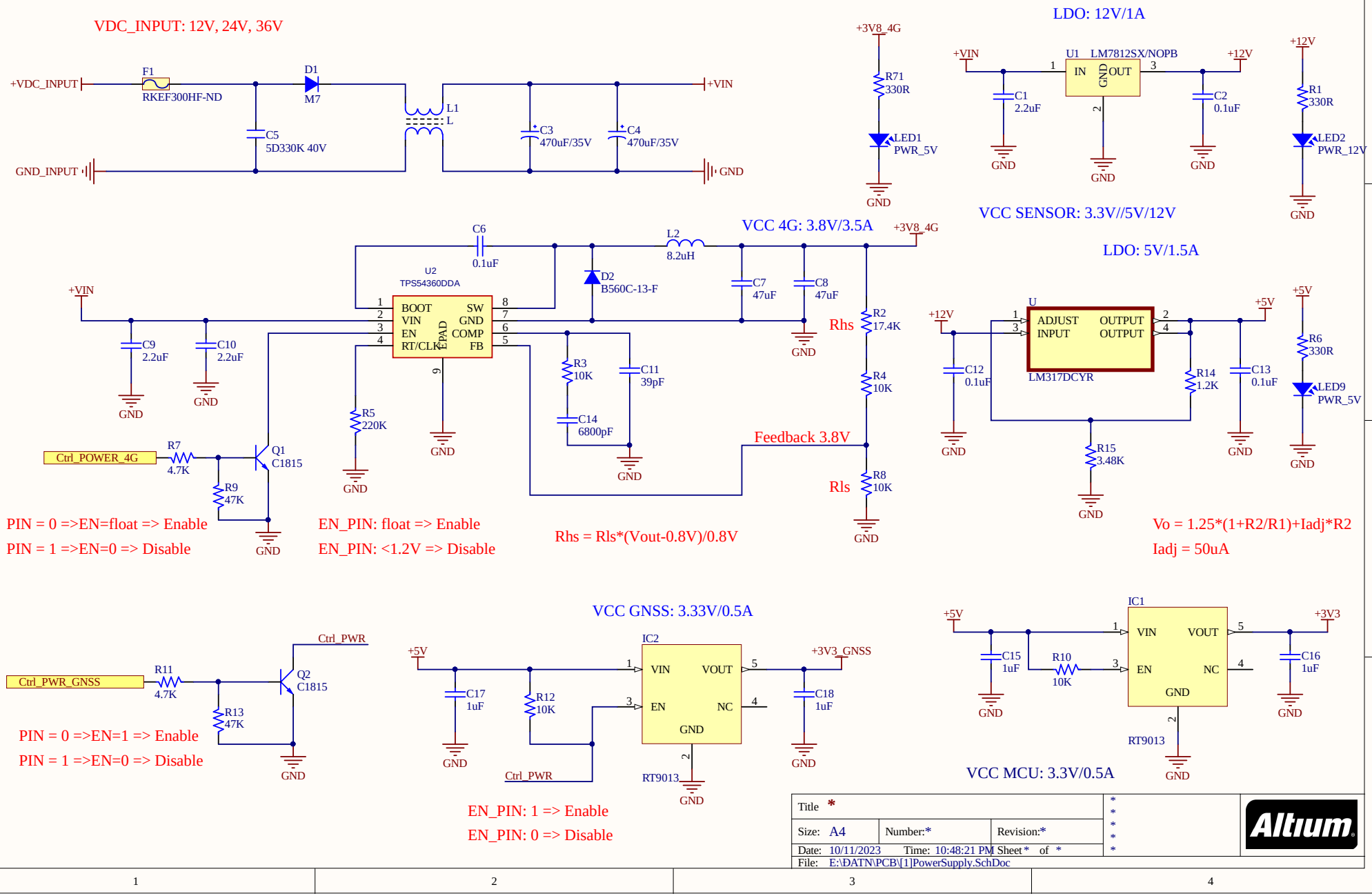
VDC_INPUT: 12V, 24V, 36V
+VDC_INPUT
F1
RKEF300HF-ND
D1
M7
L1
L
C5
5D330K 40V
C3
470uF/35V
C4
470uF/35V
+VIN
GND_INPUT
GND
+3V8_4G
R71
330R
LED1
PWR_5V
LDO: 12V/1A
+VIN
U1 LM7812SX/NOPB
IN
GND
OUT
+12V
C1
2.2uF
C2
0.1uF
R1
330R
LED2
PWR_12V
VCC SENSOR: 3.3V//5V/12V
VCC 4G: 3.8V/3.5A
C6
0.1uF
L2
8.2uH
U2
TPS54360DDA
BOOT
VIN
EN
RT/CLK
SW
GND
COMP
FB
EPAD
D2
B560C-13-F
C7
47uF
C8
47uF
C9
2.2uF
C10
2.2uF
R2
17.4K
Rhs
R3
10K
C11
39pF
R4
10K
R5
220K
C14
6800pF
Feedback 3.8V
R7
4.7K
Q1
C1815
R9
47K
Ctrl_POWER_4G
R8
10K
Rls
LDO: 5V/1.5A
U
ADJUST
INPUT
OUTPUT
OUTPUT
LM317DCYR
C12
0.1uF
R14
1.2K
C13
0.1uF
R15
3.48K
R6
330R
LED9
PWR_5V
PIN = 0 =>EN=float => Enable
PIN = 1 =>EN=0 => Disable
EN_PIN: float => Enable
EN_PIN: <1.2V => Disable
Rhs = Rls*(Vout-0.8V)/0.8V
Vo = 1.25*(1+R2/R1)+Iadj*R2
Iadj = 50uA
VCC GNSS: 3.33V/0.5A
Ctrl_PWR
Ctrl_PWR_GNSS
R11
4.7K
Q2
C1815
R13
47K
PIN = 0 =>EN=1 => Enable
PIN = 1 =>EN=0 => Disable
IC2
VIN
VOUT
EN
NC
GND
RT9013
+3V3_GNSS
C17
1uF
R12
10K
C18
1uF
EN_PIN: 1 => Enable
EN_PIN: 0 => Disable
IC1
+3V3
C15
1uF
R10
10K
C16
1uF
VCC MCU: 3.3V/0.5A
Title *
Size: A4
Number:*
Revision:*
Date: 10/11/2023
Time: 10:48:21 PM
Sheet * of *
File: E:\DATN\PCB\[1]PowerSupply.SchDoc
Altium

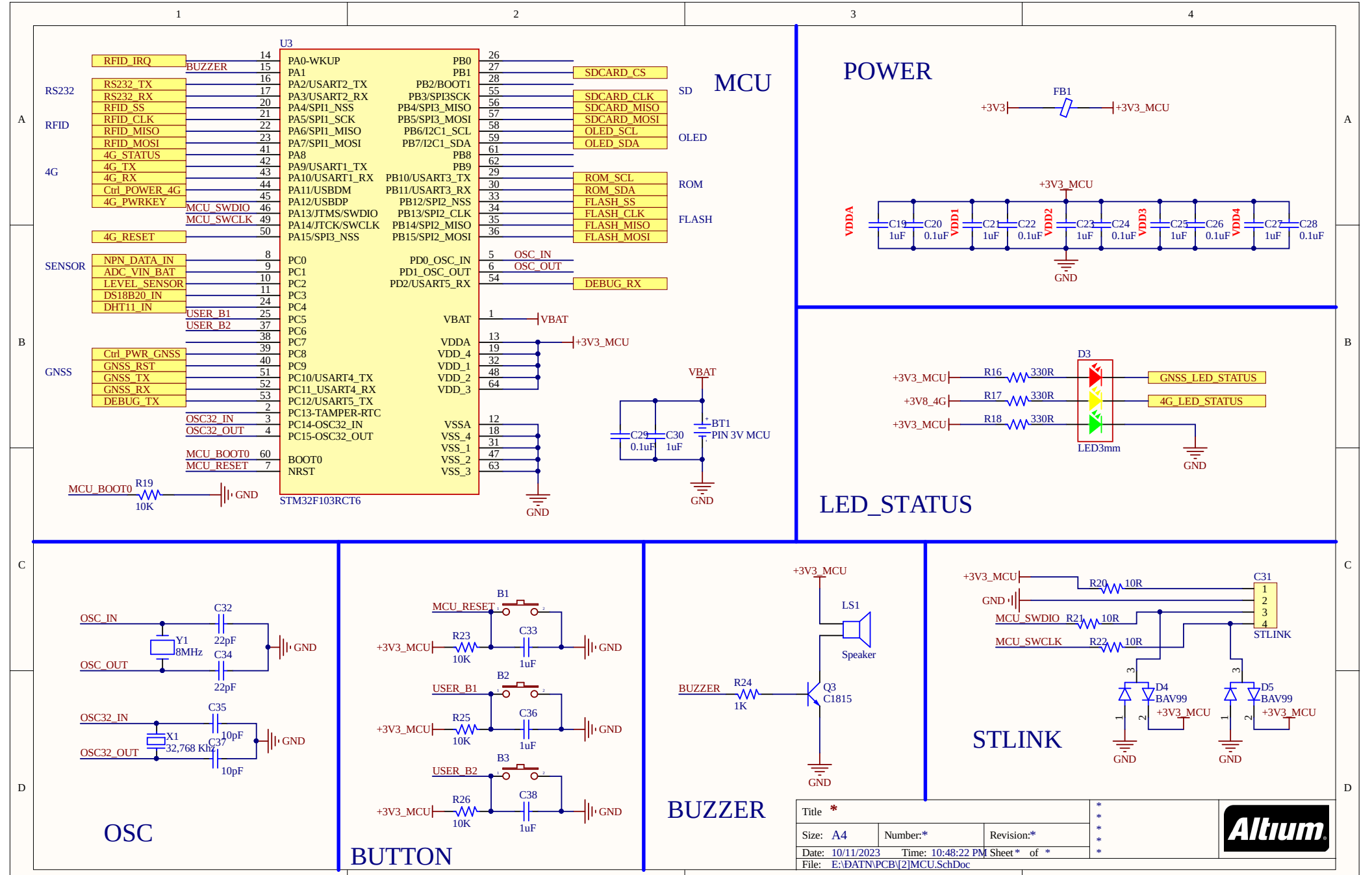
MCU
U3
STM32F103RCT6
RFID_IRQ
BUZZER
RS232_TX
RS232_RX
RFID_SS
RFID_CLK
RFID_MISO
RFID_MOSI
4G_STATUS
4G_TX
4G_RX
Ctrl_POWER_4G
4G_PWRKEY
MCU_SWDIO
MCU_SWCLK
4G_RESET
NPN_DATA_IN
ADC_VIN_BAT
LEVEL_SENSOR
DS18B20_IN
DHT11_IN
USER_B1
USER_B2
Ctrl_PWR_GNSS
GNSS_RST
GNSS_TX
GNSS_RX
DEBUG_TX
OSC32_IN
OSC32_OUT
MCU_BOOT0
MCU_RESET
SDCARD_CS
SDCARD_CLK
SDCARD_MISO
SDCARD_MOSI
OLED_SCL
OLED_SDA
ROM_SCL
ROM_SDA
FLASH_SS
FLASH_CLK
FLASH_MISO
FLASH_MOSI
OSC_IN
OSC_OUT
DEBUG_RX
VBAT
+3V3_MCU
GND
R19
10K
C29
0.1uF
C30
1uF
BT1
PIN 3V MCU
RS232
RFID
4G
SENSOR
GNSS
SD
OLED
ROM
FLASH
POWER
FB1
+3V3
+3V3_MCU
VDDA
VDD1
VDD2
VDD3
VDD4
C19
C20
C21
C22
C23
C24
C25
C26
C27
C28
1uF
0.1uF
LED_STATUS
D3
R16
R17
R18
330R
+3V8_4G
GNSS_LED_STATUS
4G_LED_STATUS
LED3mm
OSC
Y1
8MHz
C32
C34
22pF
X1
32,768 Khz
C35
C37
10pF
BUTTON
B1
B2
B3
MCU_RESET
USER_B1
USER_B2
R23
R25
R26
C33
C36
C38
1uF
BUZZER
R24
1K
Q3
C1815
LS1
Speaker
STLINK
R20
R21
R22
10R
C31
D4
D5
BAV99
Title *
Size: A4
Number:*
Revision:*
Date: 10/11/2023
Time: 10:48:22 PM
Sheet * of *
File: E:\ĐATN\PCB\[2]MCU.SchDoc
Altium

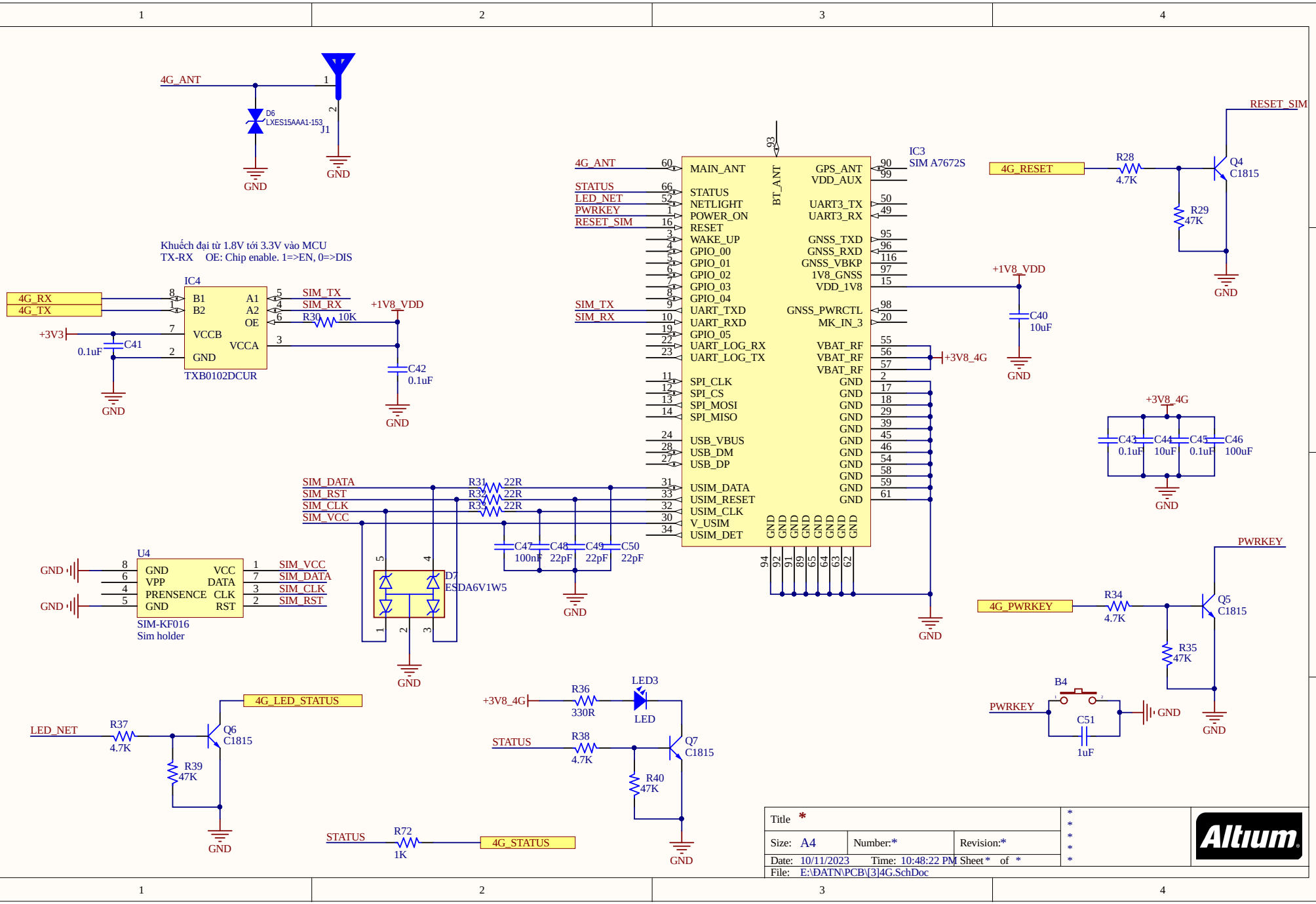
4G_ANT
D6
LXES15AAA1-153
J1
GND
Khuếch đại từ 1.8V tới 3.3V vào MCU
TX-RX OE: Chip enable. 1=>EN, 0=>DIS
IC4
4G_RX
4G_TX
B1
B2
A1
A2
OE
VCCB
VCCA
GND
TXB0102DCUR
SIM_TX
SIM_RX
R30 10K
+1V8_VDD
+3V3
C41
0.1uF
C42
0.1uF
IC3
SIM A7672S
MAIN_ANT
BT_ANT
GPS_ANT
VDD_AUX
STATUS
NETLIGHT
POWER_ON
RESET
WAKE_UP
GPIO_00
GPIO_01
GPIO_02
GPIO_03
GPIO_04
UART_TXD
UART_RXD
GPIO_05
UART_LOG_RX
UART_LOG_TX
SPI_CLK
SPI_CS
SPI_MOSI
SPI_MISO
USB_VBUS
USB_DM
USB_DP
USIM_DATA
USIM_RESET
USIM_CLK
V_USIM
USIM_DET
UART3_TX
UART3_RX
GNSS_TXD
GNSS_RXD
GNSS_VBKP
1V8_GNSS
VDD_1V8
GNSS_PWRCTL
MK_IN_3
VBAT_RF
VBAT_RF
VBAT_RF
+3V8_4G
4G_RESET
R28 4.7K
Q4 C1815
R29 47K
RESET_SIM
C40 10uF
+3V8_4G
C43 0.1uF
C44 10uF
C45 0.1uF
C46 100uF
SIM_DATA
SIM_RST
SIM_CLK
SIM_VCC
R31 22R
R32 22R
R33 22R
C47 100nF
C48 22pF
C49 22pF
C50 22pF
D7
ESDA6V1W5
U4
SIM-KF016
Sim holder
PWRKEY
4G_PWRKEY
R34 4.7K
Q5 C1815
R35 47K
B4
C51 1uF
4G_LED_STATUS
LED_NET
R37 4.7K
Q6 C1815
R39 47K
+3V8_4G
R36 330R
LED3
LED
STATUS
R38 4.7K
Q7 C1815
R40 47K
R72 1K
4G_STATUS
Title *
Size: A4
Number:*
Revision:*
Date: 10/11/2023
Time: 10:48:22 PM
Sheet * of *
File: E:\ĐATN\PCB\[3]4G.SchDoc
Altium

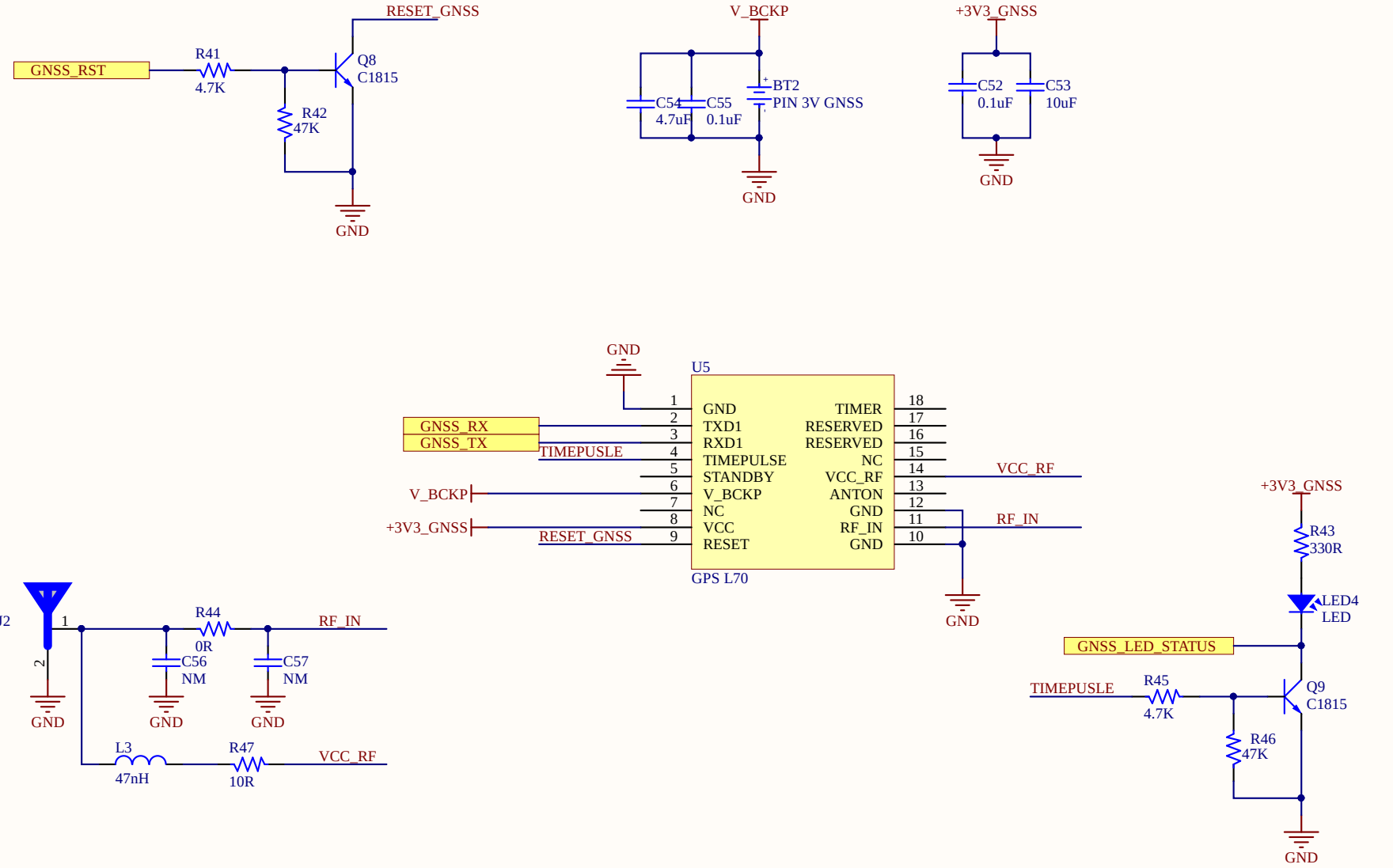

Title		
Size A	Number	Revision
Date: 10/11/2023		Sheet of
File: E:\ĐATN\PCB\[4]GNSS.SchDoc		Drawn By:

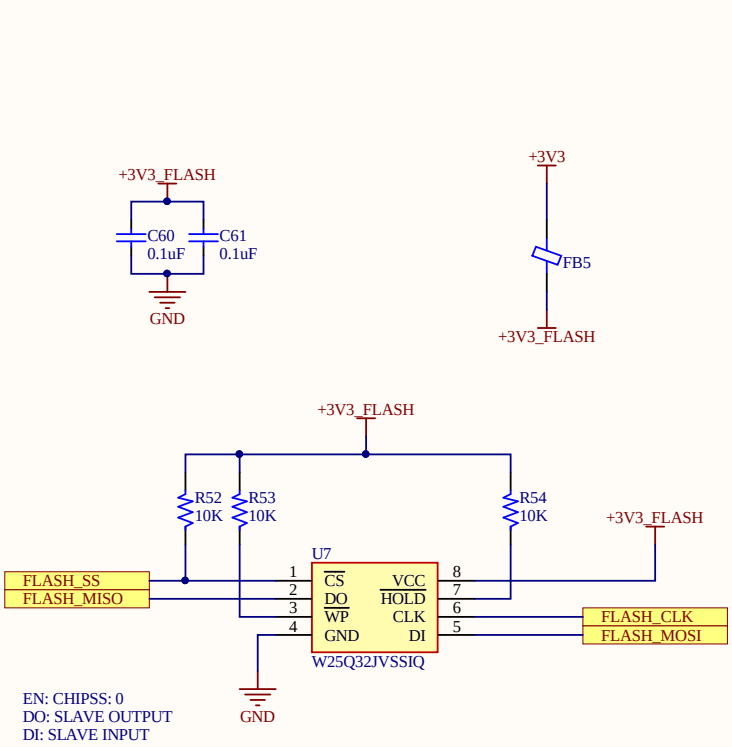

FLASH

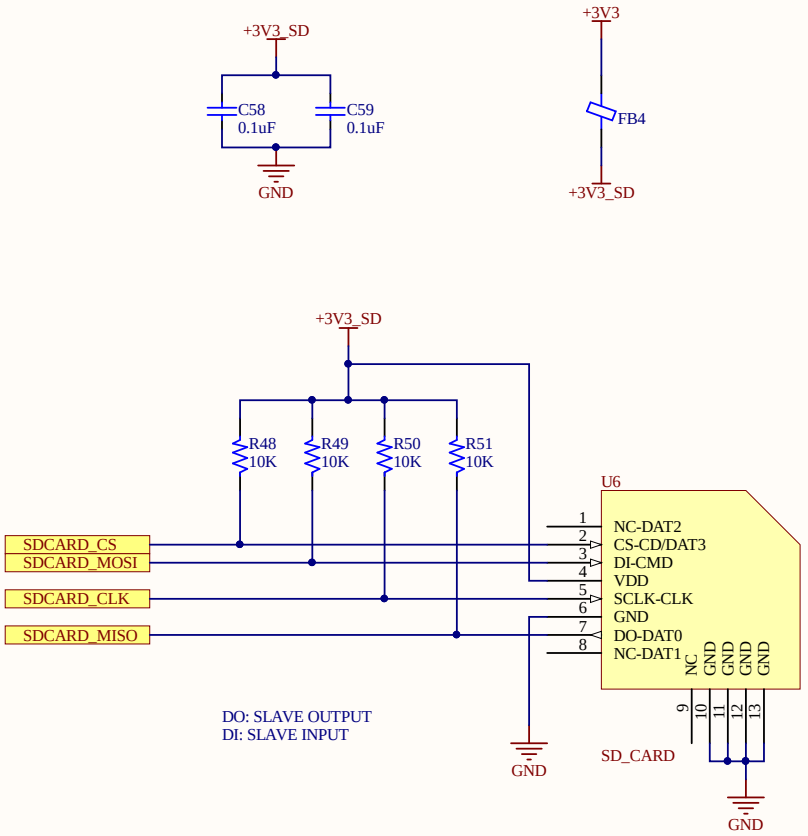

SD CARD

Title *			*
Size: A4	Number:*	Revision:*	*
Date: 10/11/2023	Time: 10:48:22 PM	Sheet * of *	*
File: E:\ĐATN\PCB\[5]Flash_SDCard.SchDoc			*

Altium

Pin 1	DCD
Pin 2	RXD
Pin 3	TXD
Pin 4	DTR
Pin 5	GND
Pin 6	DSR
Pin 7	RTS
Pin 8	CTS
Pin 9	RI

RS232 Pinout (9 Pin Male)

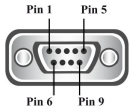

RS232

OUT: TX IN: RX

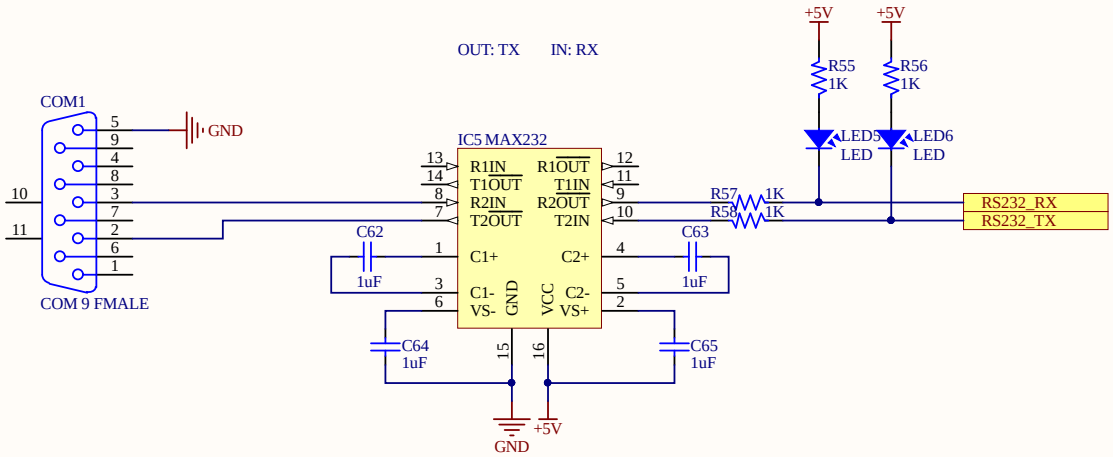

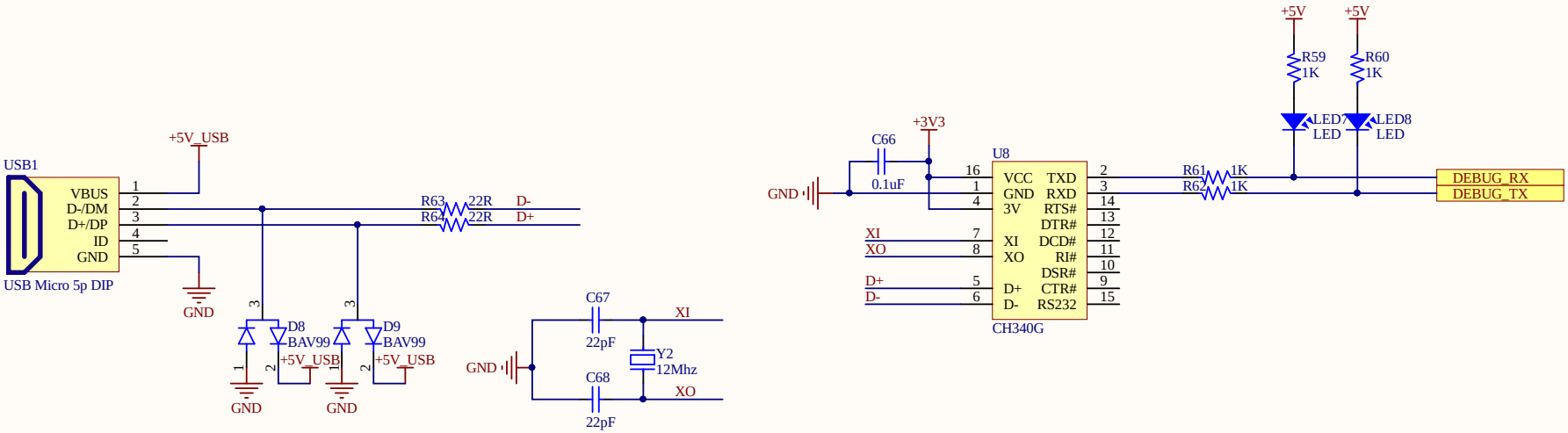

DEBUG

Title *			*
Size: A4	Number:*	Revision:*	*
Date: 10/11/2023	Time: 10:48:22 PM	Sheet * of *	*
File: E:\ĐATN\PCB\[6]RS232_Debug.SchDoc			*

Altium

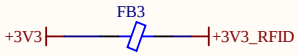

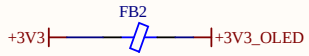

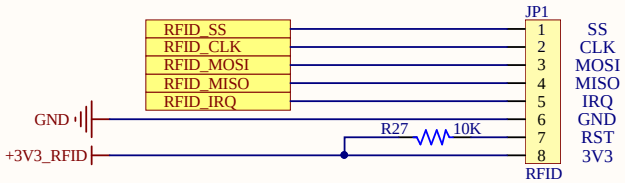

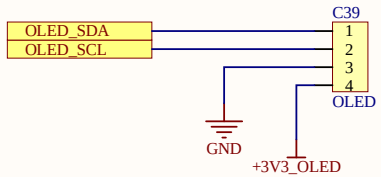

RFID

OLED

Title *			* * * * *
Size: A4	Number:*	Revision:*	
Date: 10/11/2023	Time: 10:48:22 PM	Sheet * of *	
File: E:\ĐATN\PCB\[7]RFID_OLED.SchDoc			

Altium

DIGITAL INPUT NPN

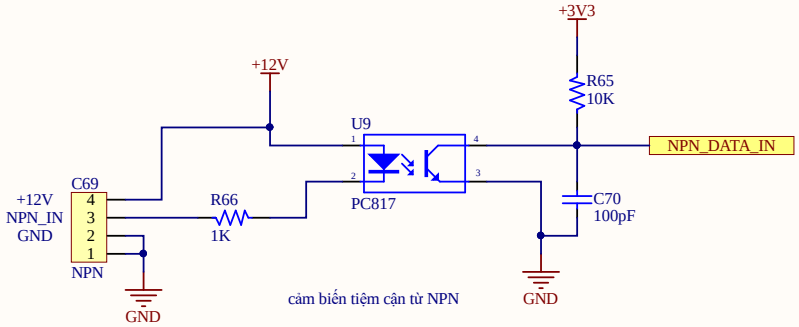

CONECTOR POWER

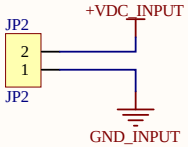

ADC INPUT

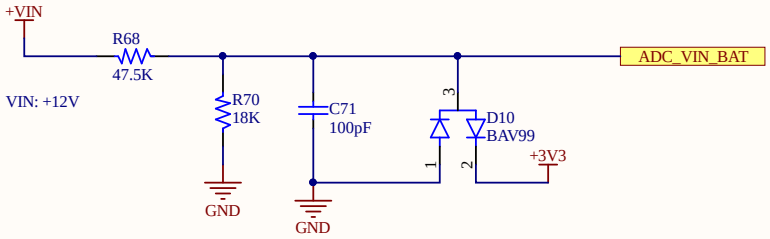

SENSORS

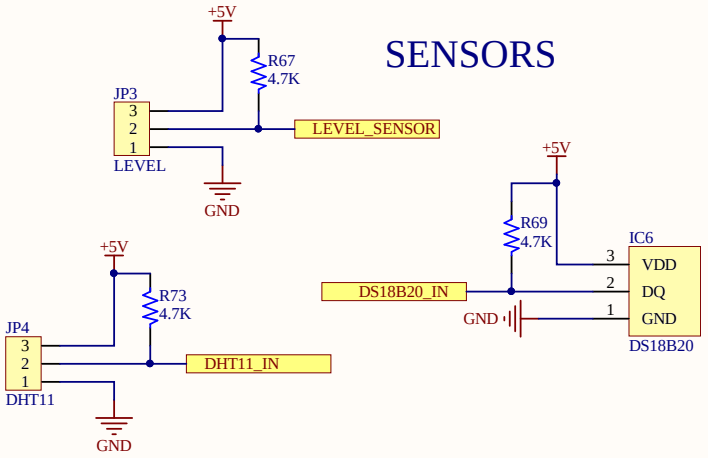

Title *			* * * * *
Size: A4	Number:*	Revision:*	
Date: 10/11/2023	Time: 10:48:22 PM	Sheet * of *	
File: E:\ĐATN\PCB\[8]Sensors.SchDoc			

Altium

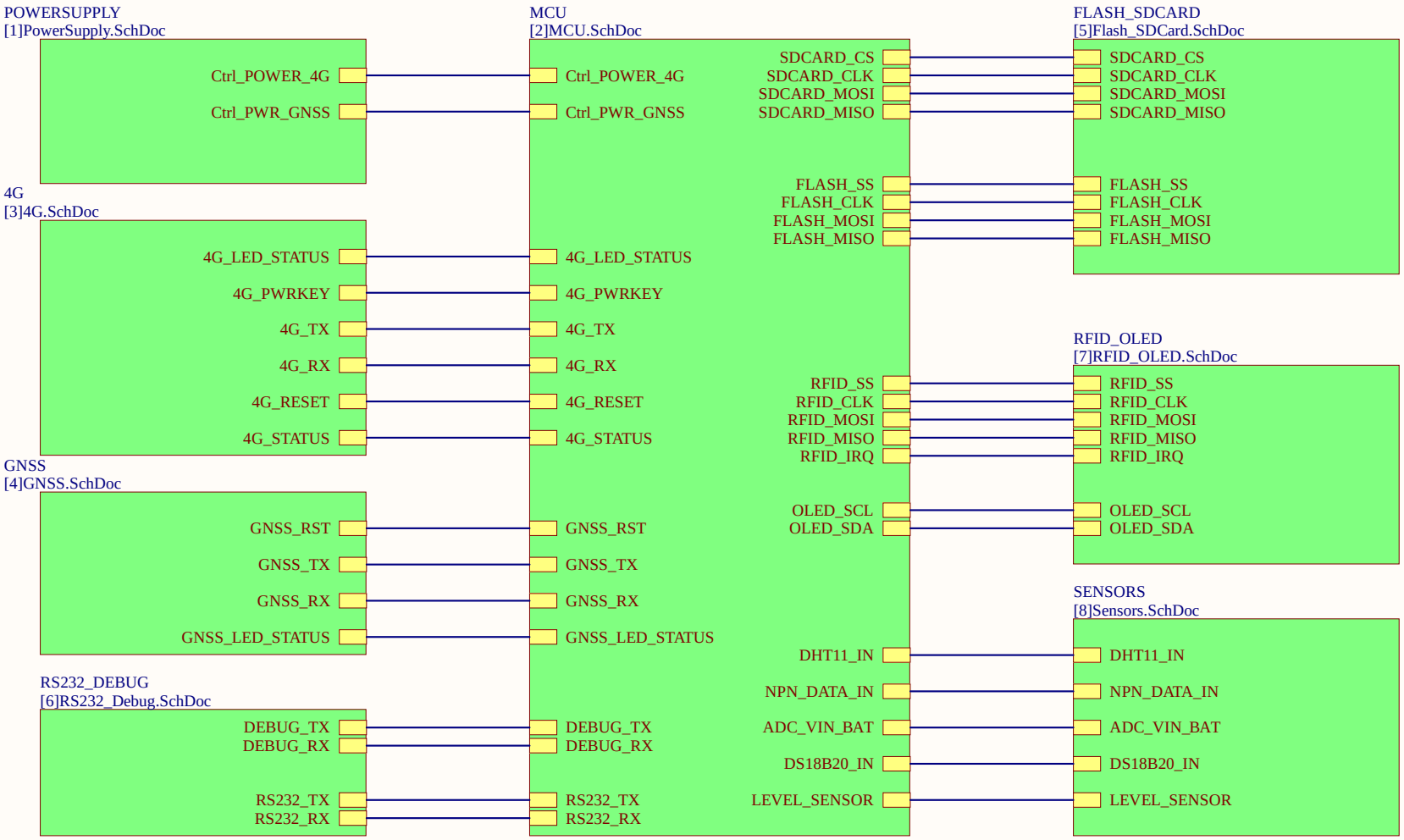

Title		
Size: A	Number	Revision
Date: 10/11/2023		Sheet of
File: E:\ĐATN\PCB\MainSheet.SchDoc		Drawn By:

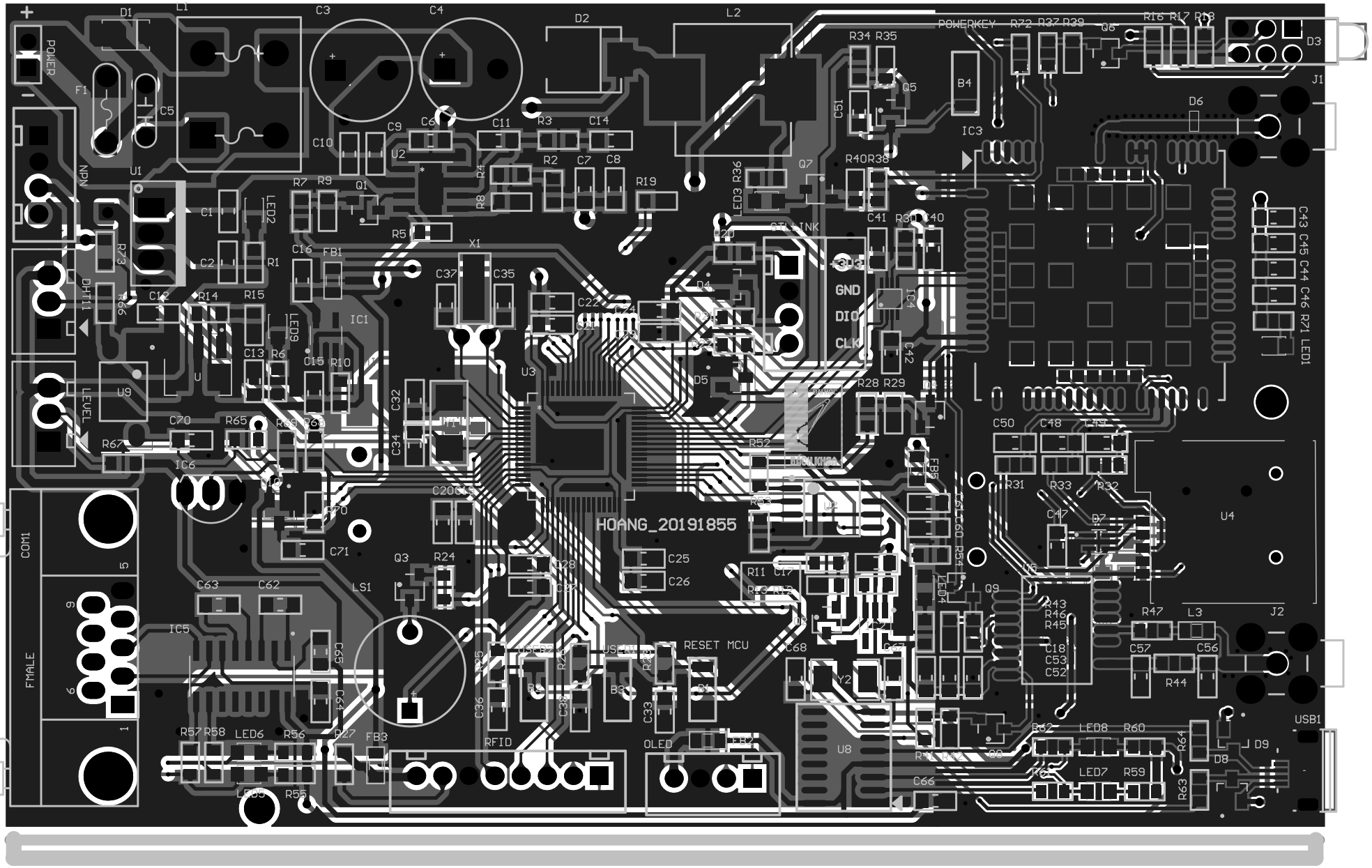
HOANG_20191855
POWER
NPN
LEVEL
COM1
FMALE
POWERKEY
STLINK
GND
DIO
CLK
RESET MCU
RFID
OLED
USB1
J1
J2
D1
L1
C3
C4
D2
L2
D3
D6
F1
C5
C10
C9
C6
C11
R3
C14
U2
U1
R7
R9
Q1
R2
C7
C8
R19
R4
R8
LED2
C1
C2
R1
R5
X1
C16
FB1
C37
C35
C12
R14
R15
IC1
LED9
C13
R6
C15
R10
U3
U9
C32
C34
C70
R65
R67
IC6
C71
Q3
R24
LS1
C63
C62
IC5
C65
C64
R57
R58
LED6
R56
R27
FB3
R55
C22
C24
D4
D5
R52
R53
R11
C17
C25
C26
C68
C67
Y2
U8
C66
R34
R35
Q5
B4
IC3
R40
R38
Q7
C41
R30
C40
IC4
C42
R28
R29
C50
C48
C49
R31
R33
R32
C47
D7
U4
Q9
R43
R46
R45
C18
C53
C52
R47
L3
C57
C56
R44
R62
LED8
R60
R64
D9
D8
LED7
R59
R63
R72
R37
R39
Q6
R16
R17
R18
C43
C45
C44
C46
R71
LED1

Comment	Description	Designator	Footprint	LibRef	Quantity
Button 3x4x2.5		B1, B2, B3, B4	Button 3x4x2.5	Button 3x4x2.5	4
PIN 3V MCU	Battery 3VDC	BT1	CR1220 SMD	PIN 3V	1
PIN 3V GNSS	Battery 3VDC	BT2	CR1220 SMD	PIN 3V	1
2.2uF	Capacitor	C1, C9, C10	CAP_0805	Cap5MD	3
0.1uF	Capacitor	C2, C6, C12, C13, C20, C22, C24, C26, C28, C29, C41, C42, C43, C45, C52, C55, C58, C59, C60, C61, C66	CAP_0805	Cap5MD	21
470uF/35V	Cap 1000uF/16V - 220uF/50V	C3, C4	C10mm	CP4	2
SD330K 40V	SD330K 33V	C5	CN2	CN	1
47uF	Capacitor	C7, C8	CAP_0805	Cap5MD	2
39pF	Capacitor	C11	CAP_0805	Cap5MD	1
6800pF	Capacitor	C14	CAP_0805	Cap5MD	1
1uF	Capacitor	C15, C16, C17, C18, C19, C21, C23, C25, C27, C30, C33, C36, C38, C51, C62, C63, C64, C65	CAP_0805	Cap5MD	18
STLINK	Header IDC, 4 x 1 Pin Vertical 2.54mm Pitch (Non-Boxed, Male)	C31	CON_4P	Header4	1
22pF	Capacitor	C32, C34, C48, C49, C50, C67, C68	CAP_0805	Cap5MD	7
10pF	Capacitor	C35, C37	CAP_0805	Cap5MD	2
OLED	Header IDC, 4 x 1 Pin Vertical 2.54mm Pitch (Non-Boxed, Male)	C39	CON_4P	Header4	1
10uF	Capacitor	C40, C44, C53	CAP_0805	Cap5MD	3
100uF	Capacitor	C46	CAP_0805	Cap5MD	1
100nF	Capacitor	C47	CAP_0805	Cap5MD	1
4.7uF	Capacitor	C54	CAP_0805	Cap5MD	1
NM	Capacitor	C56, C57	CAP_0805	Cap5MD	2
NPN	Header IDC, 4 x 1 Pin Vertical 2.54mm Pitch (Non-Boxed, Male)	C69	CON_4P	Header4	1
100pF	Capacitor	C70, C71	CAP_0805	Cap5MD	2
COM 9 FMALE	COM 9	COM1	DSB 9-F	DSB9F	1
M7	Diode 1A	D1	SMA11	D1A	1
B560C-13-F	DIODE SCHOTTKY 60V 5A SMC	D2	DO-214AB SMC	D5A	1
LED3mm	LED 3 holder RGB 3mm	D3	LED 3 holder 3mm	LED3Holder_3	1
BAV99	Diode Array 1 Pair Series Connection Standard 100V 215mA (DC) Surface Mount TO-236-3, SC-59, SOT-23-3	D4, D5, D8, D9, D10	DIO_BAV99	BAV99	5
LXES15AAA1-153	TVS DIODE 4VWM 10DS	D6	R-0402	TVS	1
ESDA6V1W5	- Clamp - Ipp Tvs Diode Surface Mount SOT-323-5	D7	SOT65P210X110-5N	ESDA6V1W5	1
RKEF300HF-ND	PTC RESET FUSE 60V 3A RADIAL	F1	FUSE2	Fuse	1
120R	Ferrite beads	FB1, FB2, FB3, FB4, FB5	RES-SMD-0805	Ferrite beads	5
RT9013	RT9013-33GB IC REG LINEAR 3.3V 500mA SOT23-5	IC1, IC2	SOT23-5	RT9013	2
SIM_A7672S	SIM A7672S-CAT-M1	IC3	SIM A7672S	SIM A7672S	1
TXB0102DCUR	IC TRNSLTR BIDIRECTIONAL USB	IC4	US8	TXB0102DCUR	1
MAX232	Dual EIA-232 Driver/Receiver	IC5	MAX232DR	MAX232	1
DS18B20	High Precision 1-Wire® Digital Thermometer	IC6	DS18S20	DS18S20	1
GPS		J1	Antenna-MCX5.08-H5	ANTEN	1
GPS_ANTENNA		J2	Antenna-MCX5.08-H5	ANTEN	1
RFID	Connector 8	JP1	CON_8P	Con8	1
JP2	WR-PHD 2.54 mm Angled Socket Header	JP2	JP2-C1T	JP2	1
LEVEL	Connector 3	JP3	CON3	Con3	1
DHT11	Connector 3	JP4	CON3	Con3	1
L	Inductor	L1	L2 UP9.8	L2x220	1
6.2uH	FIXED IND 6.2UH 5.7A 22.4 MOHM	L2	L01 SMD 12*12*6	L1	1
47nH	Inductor	L3	RES-SMD-0805	L1	1
PWR_5V	LED Single colour Green and Red	LED1, LED9	LED-0805-Blue	LED	2
PWR_12V	LED Single colour Green and Red	LED2	LED-0805-Blue	LED	1
LED	LED Single colour Green and Red	LED3, LED4	LED-0805-Red	LED	2
LED	LED Single colour Green and Red	LED5, LED6, LED7, LED8	LED-0805-Blue	LED	4
Speaker	Loudspeaker	LS1	SPEAKER	Speaker	1
C1815	NPN 600mW, ECB	Q1, Q2, Q3, Q4, Q5, Q6, Q7, Q8, Q9	SOT23B	C1815	9
330R	Resistor SMD	R1, R6, R16, R17, R18, R36, R43, R71	R0805	RM	8
17.4K	Resistor SMD	R2	R0805	RM	1
10K	Resistor SMD	R3, R4, R8, R10, R12, R19, R23, R25, R26, R27, R30, R48, R49, R50, R51, R52, R53, R54, R65	R0805	RM	16
220K	Resistor SMD	R5	R0805	RM	1
4.7K	Resistor SMD	R7, R11, R28, R34, R37, R38, R41, R45, R67, R69, R73	R0805	RM	11
47K	Resistor SMD	R9, R13, R29, R35, R39, R40, R42, R46	R0805	RM	8
1.2K	Resistor SMD	R14	R0805	RM	1
3.48K	Resistor SMD	R15	R0805	RM	1
10R	Resistor SMD	R20, R21, R22, R47	R0805	RM	4
1K	Resistor SMD	R24, R55, R56, R57, R58, R59, R60, R61, R62, R66, R72	R0805	RM	11
22R	Resistor SMD	R31, R32, R33, R63, R64	R0805	RM	5
0R	Resistor SMD	R44	R0805	RM	1
47.5K	Resistor SMD	R68	R0805	RM	1
18K	Resistor SMD	R70	R0805	RM	1
LM317DCYR	1.5-A, 40-V, adjustable linear voltage regulator 4-SOT-223 0 to 125	U	SOT230P700X180-4N	LM317DCYR	1
LM78125X/NOPB	LM7812SX/NOPB	U1	QTO-220	LM78xx_1	1
TPS54360DDA	REG BUCK SPLT RAIL 8SOPWRPAD	U2	DDA8_3P1X2P4-M	TPS54360DDA	1
STM32F103RCT6	MCU 32BIT 256KB FLASH 64LQFP	U3	LQFP-64	STM32F103RCT6	1
SIM-KF016	SIM Card Holder KF-016	U4	Sim Socket	Sim holder	1
GPS L70		U5	GPS L70	GPS L70	1
SD_CARD	SD/MMC holder	U6	MICROSD2	MicroSD	1
W25Q32JVSSIQ	FLASH 32MBIT 133MHZ 8SOP	U7	SO-8 208	W25Q32JV	1
CH340G	High and Low Side Driver	U8	SO16	CH340G	1
PC817	Single Opto	U9	SOT254P975X400-4N	PC817	1
USB Micro 5p DIP	USB Type B	USB1	USB Micro 5p DIP	USB Micro 5p DIP	1
32.768 Khz	Crystal 32.768kHz for timer real	X1	XT32kn	XT32k	1
8MHz	CRYSTAL 16MHZ 18PF SMD	Y1	ABM7_v1_1.8IG	ABM7-16.000MHZ-D2Y-T	1
12Mhz	Crystal For all Crystal 2pin.	Y2	Thach Anh 2 chan SMD5032	Thach Anh 2 chan SMD 5032	1