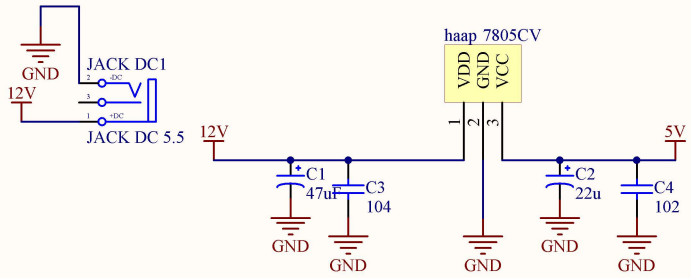

DC

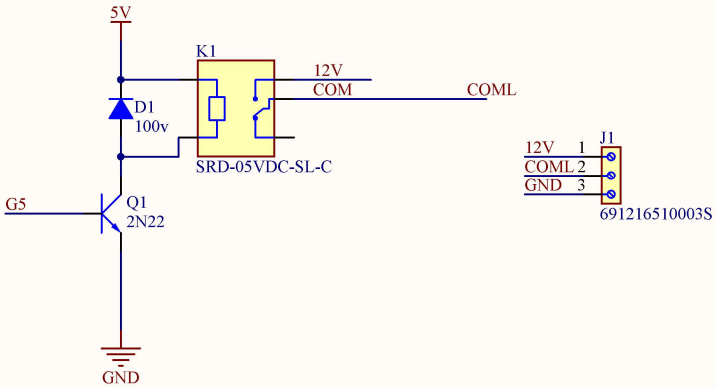

RELAY

MCU

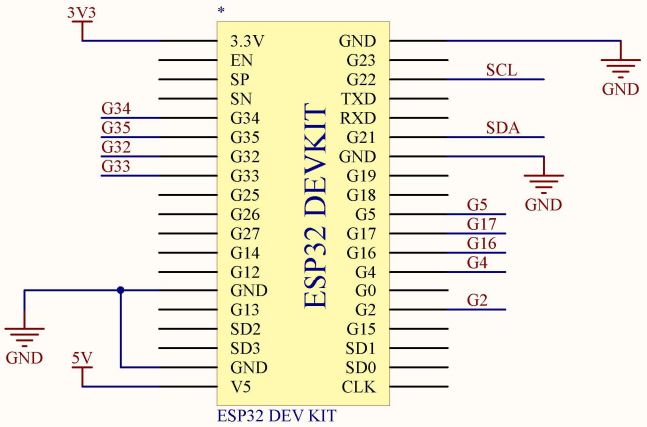

SENSOR

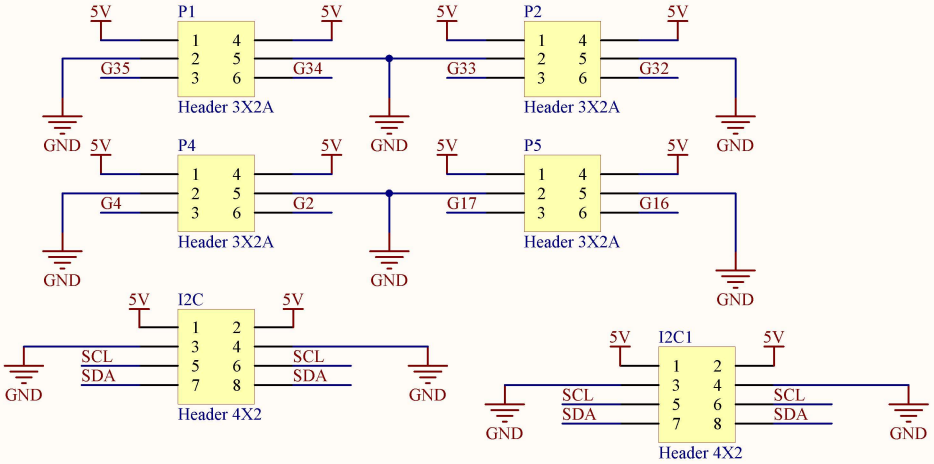

Title		
Size A	Number	Revision
Date: 4/13/2026		Sheet of
File: D:\projectal\..\Tra_doantotnghiep.SchDoc		Drawn By: