PROJECT: 2LEDs Dice game

Sub-system: 2LED_Dice.PrjPcb

Version: 1.0

VIETNAM NATIONAL UNIVERSITY HO CHI MINH CITY
HO CHI MINH CITY UNIVERSITY OF TECHNOLOGY

Sub-system: 2LED_Dice.PrjPcb	Project: 2LEDs Dice game	
Design by: Nguyễn Gia Huy	Sheet title: COVER PAGE	Sheet 1 of 5
Checked by: ThS. Bùi Quốc Bảo	Doc No: 1	Size: A3
Approved by: *	Revision: 1.0	Dates: March 14

INDEX

Page	Title	Page	Title	Page	Title
1	COVER PAGE	11	.....	21	.....
2	INDEX	12	.....	22	.....
3	BLOCK DIAGRAM	13	.....	23	.....
4	POWER TREE	14	.....	24	.....
5	SYSTEM	15	.....	25	.....
6	.....	16	.....	26	.....
7	.....	17	.....	27	.....
8	.....	18	.....	28	.....
9	.....	19	.....	29	.....
10	.....	20	.....	30	.....

VIETNAM NATIONAL UNIVERSITY HO CHI MINH CITY
HO CHI MINH CITY UNIVERSITY OF TECHNOLOGY

Sub-system: 2LED_Dice.PrjPcb	Project: 2LEDs Dice game	
Design by: Nguyễn Gia Huy	Sheet title: INDEX	Sheet 2 of 5
Checked by: ThS. Bùi Quốc Bảo	Doc No: 2	Size: A3
Approved by: *	Revision: V1.0	Dates: March 14

BLOCK DIAGRAM

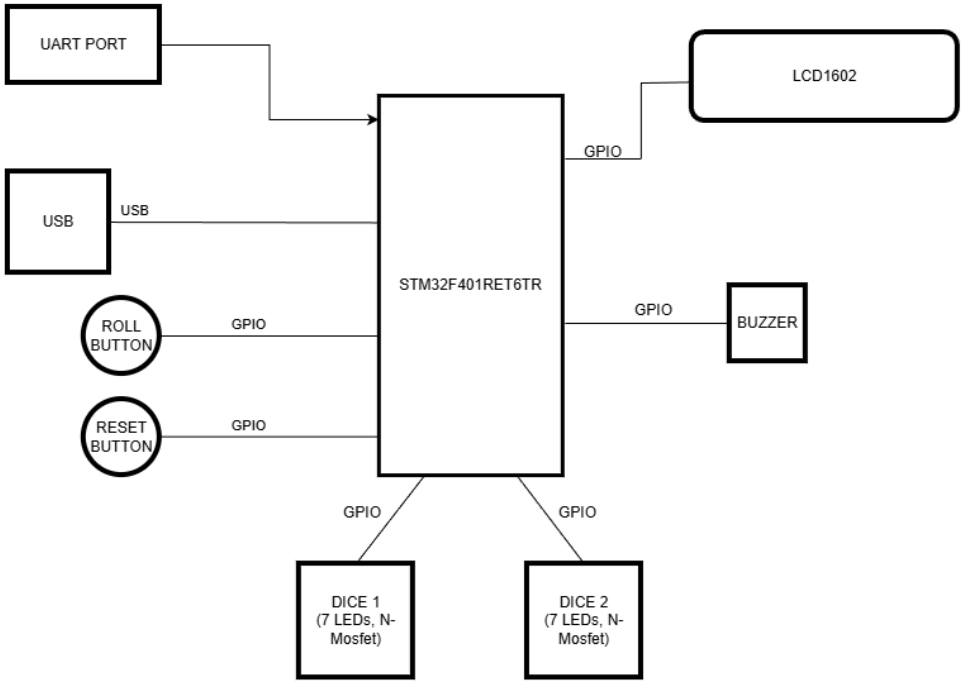

VIETNAM NATIONAL UNIVERSITY HO CHI MINH CITY
HO CHI MINH CITY UNIVERSITY OF TECHNOLOGY

Sub-system: 2LED_Dice.PrjPcb	Project: 2LEDs Dice game	
Design by: Nguyễn Gia Huy	Sheet title: BLOCK DIAGRAM	Sheet 3 of 5
Checked by: ThS. Bùi Quốc Bảo	Doc No: 3	Size: A3
Approved by: *	Revision: V1.0	Dates: March 14

POWER TREE

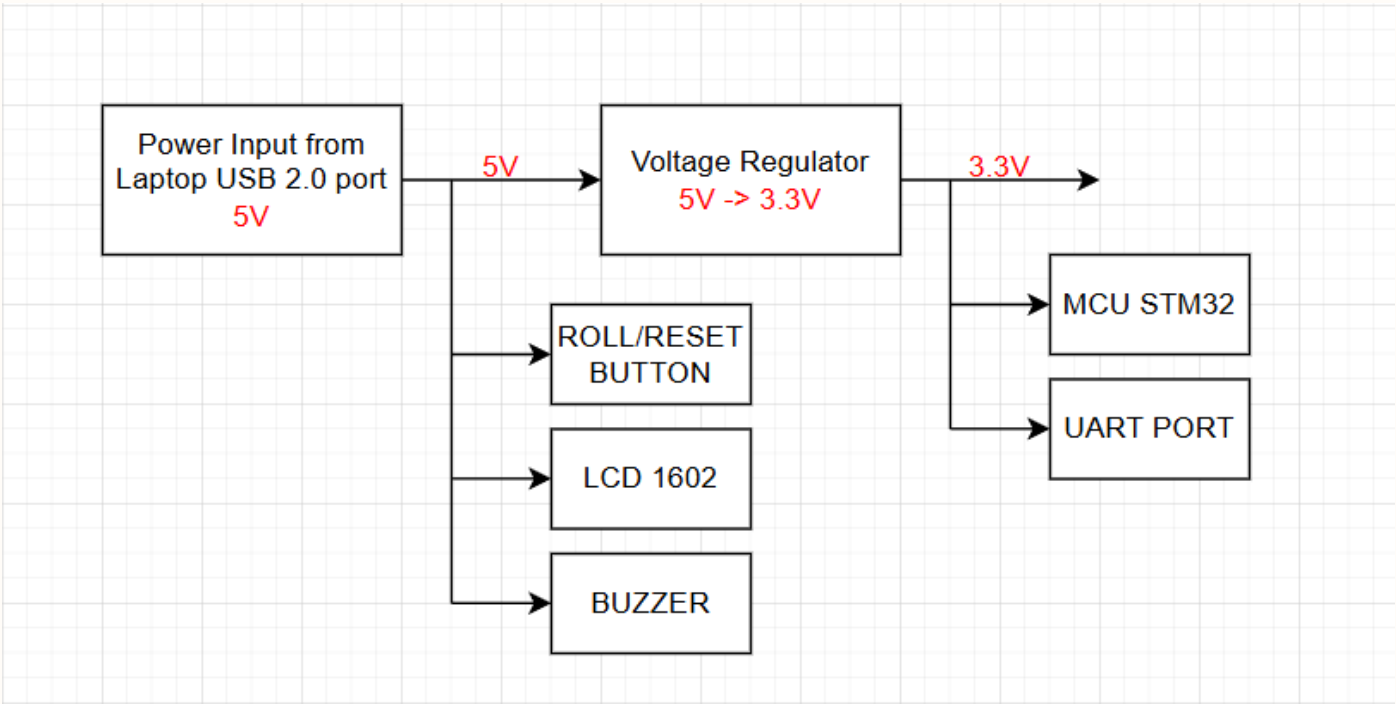

VIETNAM NATIONAL UNIVERSITY HO CHI MINH CITY
HO CHI MINH CITY UNIVERSITY OF TECHNOLOGY

Sub-system: 2LED_Dice.PrjPcb	Project: 2LEDs Dice game	
Design by: Nguyễn Gia Huy	Sheet title: POWER TREE	Sheet 4 of 5
Checked by: ThS. Bùi Quốc Bảo	Doc No: 4	Size: A3
Approved by: *	Revision: V1.0	Dates: March 14

SYSTEM

Power Supply

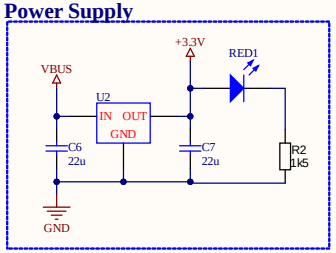

USB

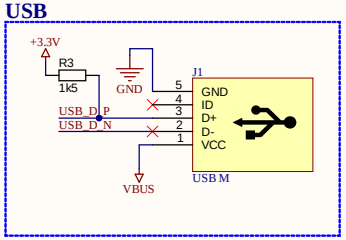

ROLL BUTTON

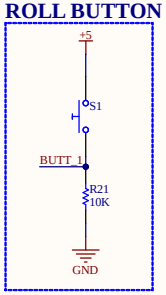

RESET BUTTON

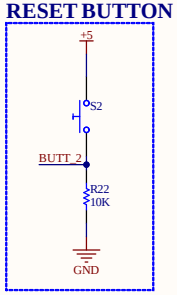

STM32F401RET6TR

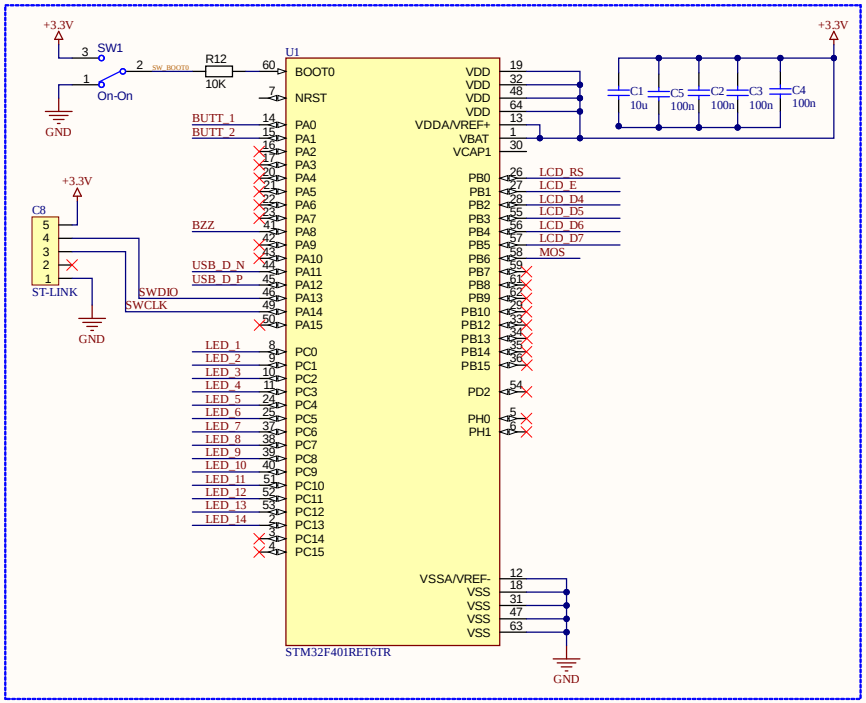

LCD1602

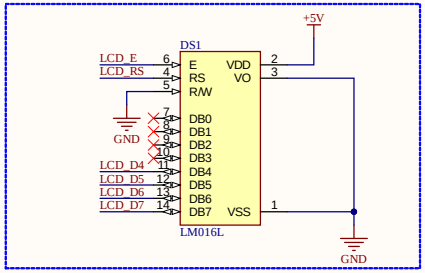

BUZZER

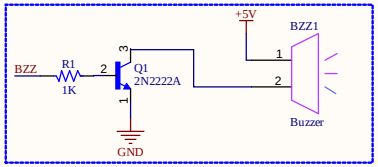

DICE 1 (7 LEDs, N-MOSFET)

DICE 2 (7 LEDs, N-MOSFET)

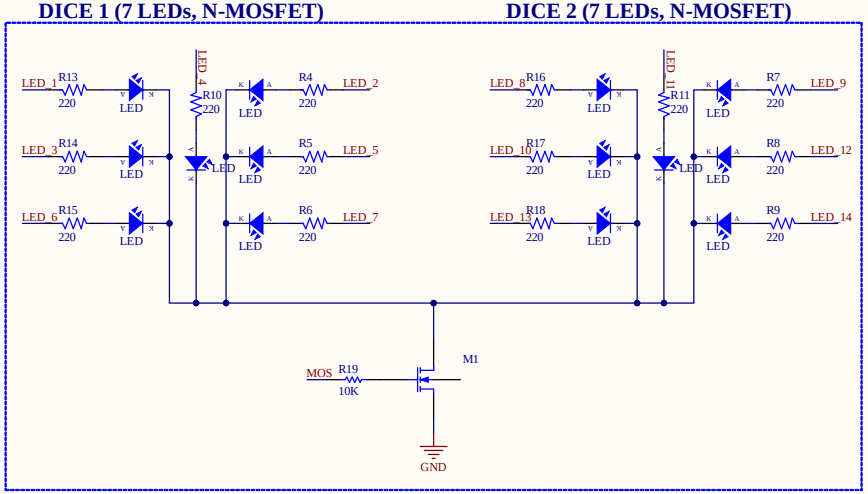

VIETNAM NATIONAL UNIVERSITY HO CHI MINH CITY
HO CHI MINH CITY UNIVERSITY OF TECHNOLOGY

Sub-system: 2LED_Dice.PrjPcb	Project: 2LEDs Dice game	
Design by: Nguyễn Gia Huy	Sheet title: SYSTEM	Sheet 5 of 5
Checked by: ThS. Bùi Quốc Bảo	Doc No: 5	Size: A3
Approved by: *	Revision: V1.0	Dates: March 14